STATE	PROJECT NO.	YEAR	SHEET NO.	TOTAL SHEETS
KANSAS	87 N-0187-01	2006	21	47

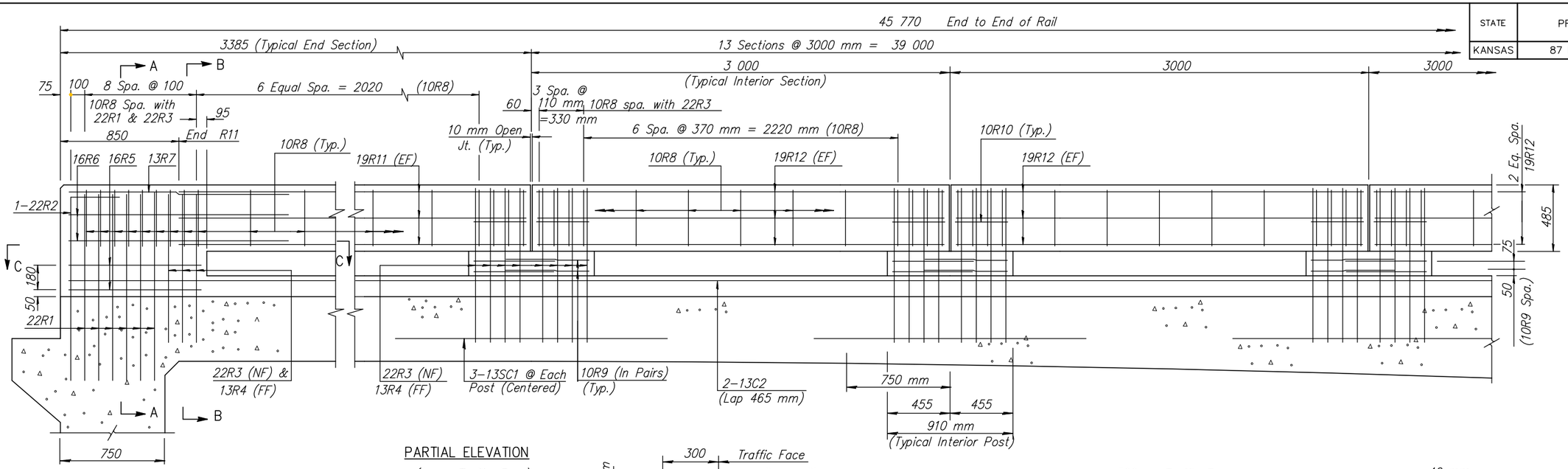

PARTIAL ELEVATION

(Along Traffic Face)

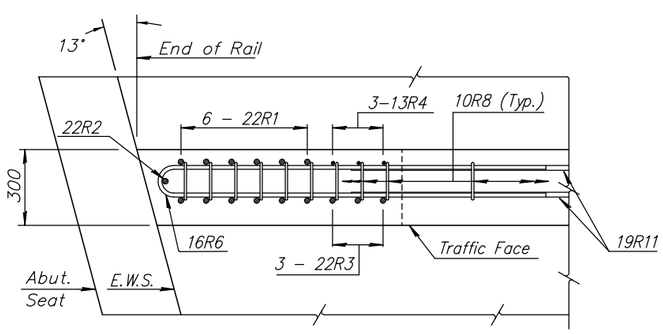

SECTION C-C

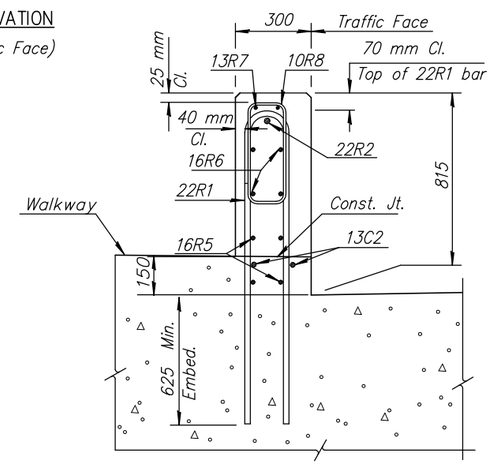

SECTION A-A

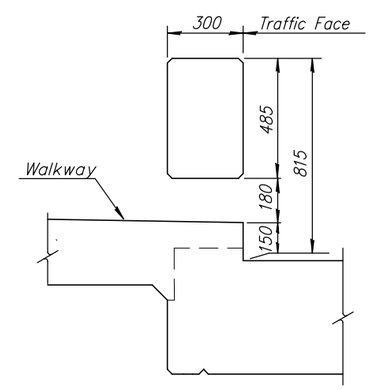

TYPICAL SECTION BETWEEN POSTS

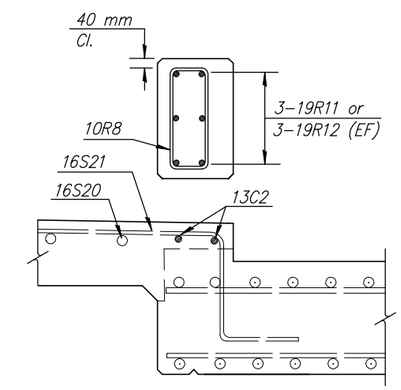

TYPICAL SECTION BETWEEN POSTS

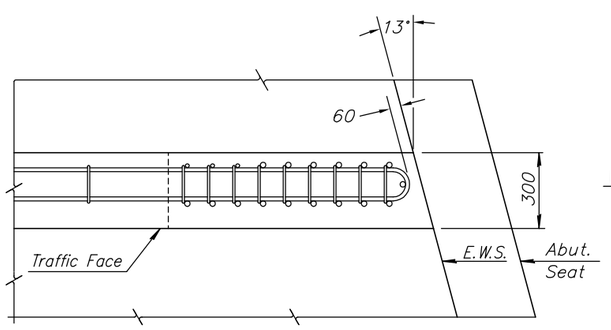

PLAN

SKETCH FOR SKEWED STRUCTURE

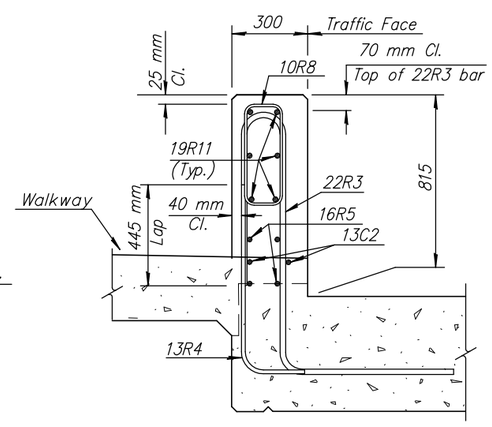

SECTION B-B

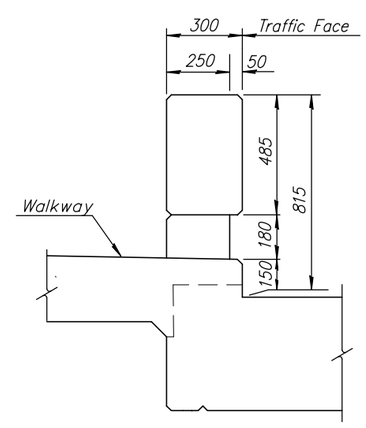

TYPICAL INTERIOR POST

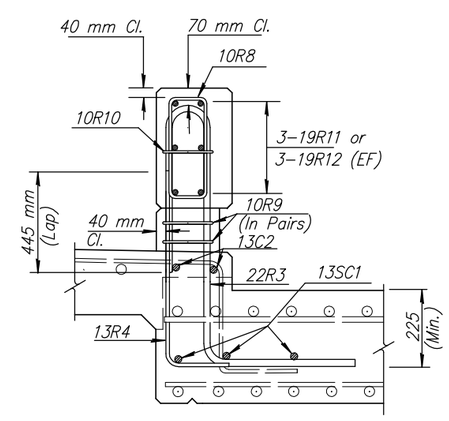

TYPICAL SECTION INTERIOR POST

LEGEND

NF = Near Face
FF = Far Face
EF = Each Face

G:\CIVIL\98169\05693\BRIDGE\05693RAL.DWG 02/15/2006 02:41:46 PM CST

KANSAS DEPARTMENT OF TRANSPORTATION

BR. NO. 53040087WDC150 STA. 10+00.00

815 mm KANSAS CORRAL RAIL

PROJECT NO. 87 N-0187-01 SEDGWICK CO.

M K E C ENGINEERING CONSULTANTS, INC.

WICHITA, KANSAS

DESIGNED BY:	KJS	CHECKED BY:	KJS	
DRAWN BY:	DPG/JSB	DATE: DEC. 2005	SHEET 21 OF 47	