STATE	PROJECT NO.	YEAR	SHEET NO.	TOTAL SHEETS
KANSAS	87 N-0247-01	2005	24	48

NOTE: The use of Straw or Hay Bales, Silt Fence or Triangular Silt Dike for Temporary Inlet Sediment Barrier is at the option of the Contractor.

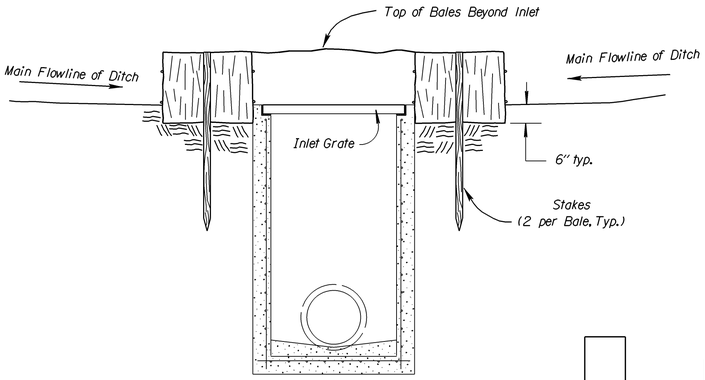

SECTION D - D

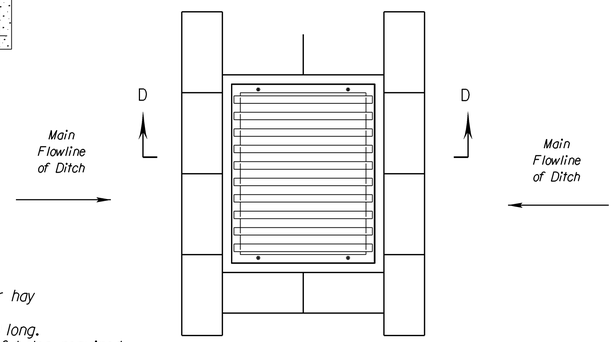

PLAN

STRAW OR HAY BALES:

1. Place bales tightly together, with loose straw or hay wedged between bales to close off openings.
2. Wood stakes shall be 2" x 2" (nom.) x 4' (min.) long.
3. Refer to plans sheets to estimate the number of bales required.
4. Use only twine to bind bales. The use of wire binding is prohibited because it does not readily biodegrade.

TEMPORARY INLET SEDIMENT BARRIER
(STRAW OR HAY BALE METHOD)

NO SCALE

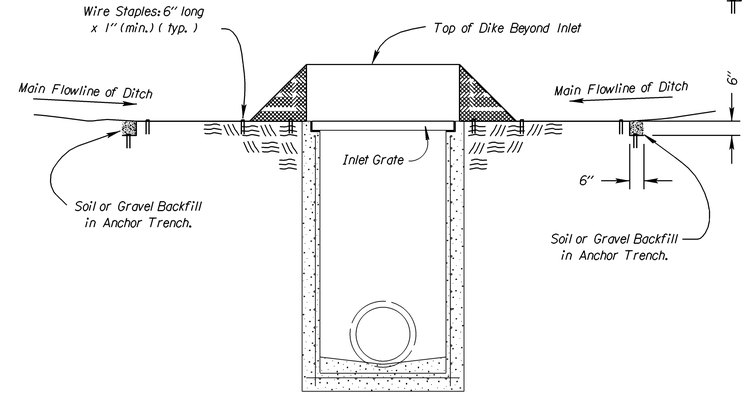

SECTION A - A

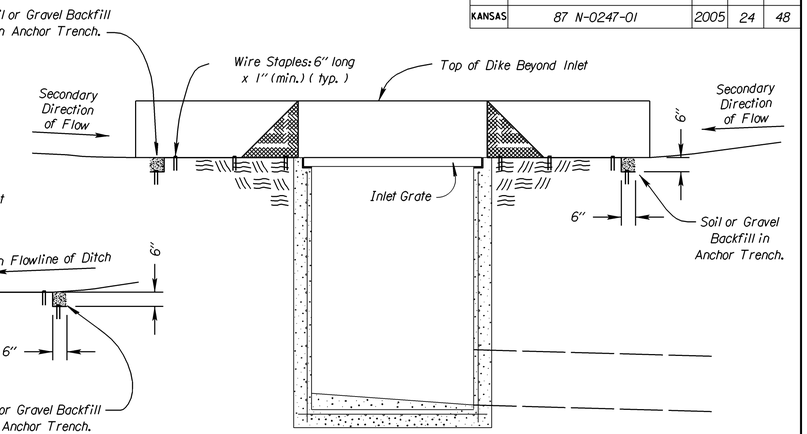

SECTION B - B

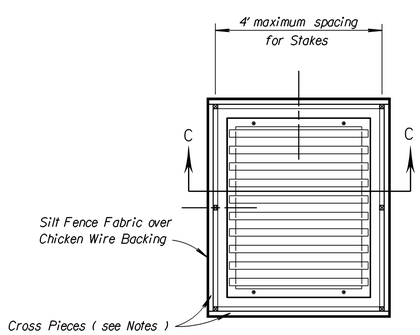

PLAN

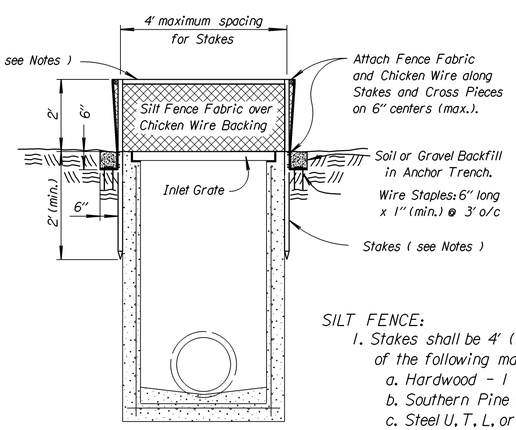

SECTION C - C

TEMPORARY INLET SEDIMENT BARRIER
(SILT FENCE METHOD)

NO SCALE

SILT FENCE:

1. Stakes shall be 4' (min.) long and of one of the following materials:
   a. Hardwood - 1 3/16" x 1 3/16";
   b. Southern Pine (No. 2) - 2 5/8" x 2 5/8";
   c. Steel U, T, L, or C Section - 1.33 lbs. per 1'-0"; or
   d. Synthetic - same strength as wood stakes.
2. Cross Pieces shall be of same material as Stakes.
3. Attach fence fabric to stakes with staples, wire or nails.
4. Refer to plan sheets to estimate the length of Silt Fence required.

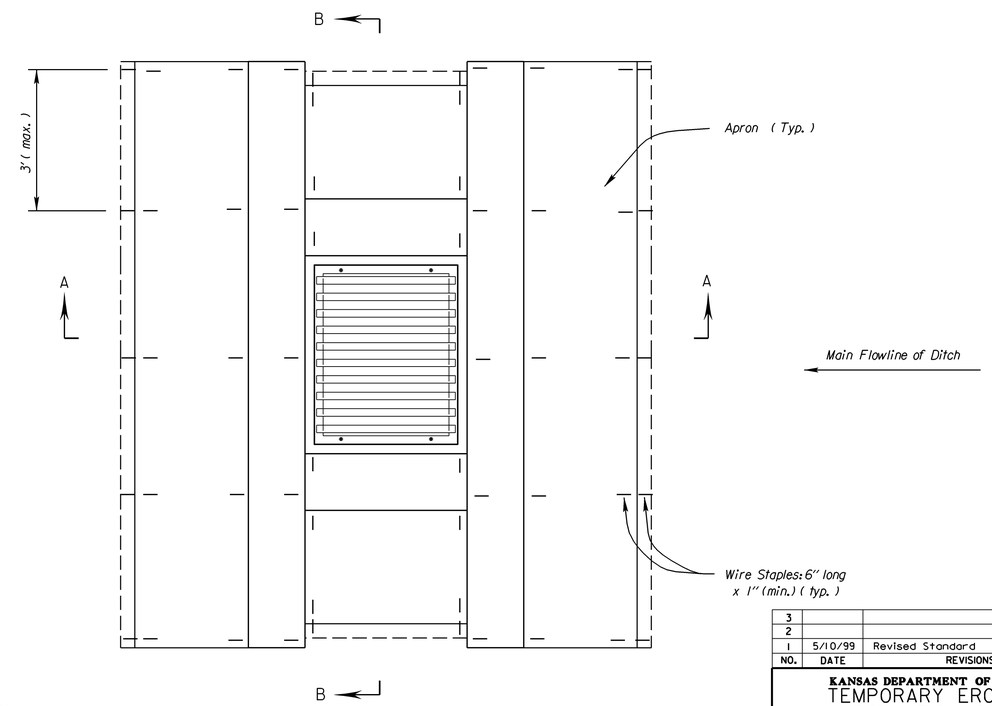

PLAN

TEMPORARY INLET SEDIMENT BARRIER
(TRIANGULAR SILT DIKE METHOD)

NO SCALE

NO.	DATE	REVISIONS	BY	APP'D
3				
2				
1	5/10/99	Revised Standard	WCL	RDR

KANSAS DEPARTMENT OF TRANSPORTATION

TEMPORARY EROSION AND POLLUTION CONTROL

TEMP. INLET SEDIMENT BARRIER (SILT FENCE)
TEMP. INLET SEDIMENT BARRIER (BALES)
TEMP. INLET SEDIMENT BARRIER (T.S.D.)

LA852C

F.H.W.A. APPROVAL		5/20/99	APP'D	Richard D. Ross	
DESIGNED	WCL	DETAILED	WCL	QUANTITIES	TRACED WCL
DESIGN CK.	RDR	DETAIL CK.	RDR	QUAN.CK.	TRACE CK. RDR

Drawn By : untitled
DGN File : $$$$$$$$$$$$$$DGNSPEC$$$$$$$$$$$$$$
Plotted : 11/9/2004 View- PLOT 1