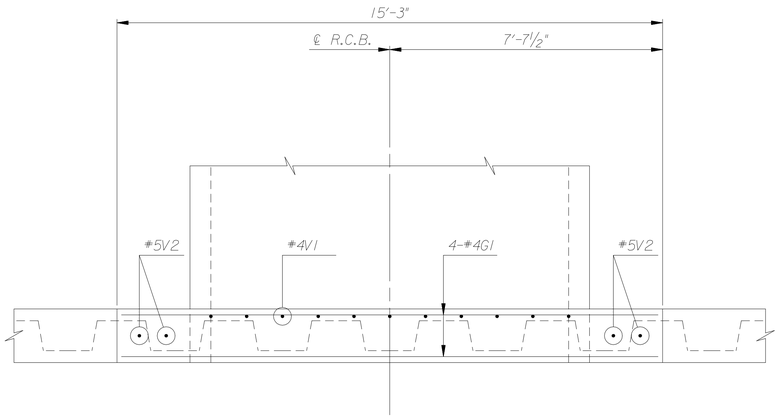

PLAN

The RCB Headwall bid item will include the removal of existing sheetpile to the concrete header, associated reinforcing, drill and grout and all miscellaneous material necessary to complete the installation.

REINFORCING STEEL							
Straight Bars				Bent Bars			
Mark	No.	Size	Length	Mark	No.	Size	Length
G1	8	#4	15'-0"	V1	11	#4	3'-2"
H1	10	#4	2'-3"				
V2	4	#5	7'-11"				

BILL OF MATERIALS		
Item	Quantity	Unit
Concrete	3.5	C.Y.
Reinforcing Steel (Grade 60)	151	Lbs.

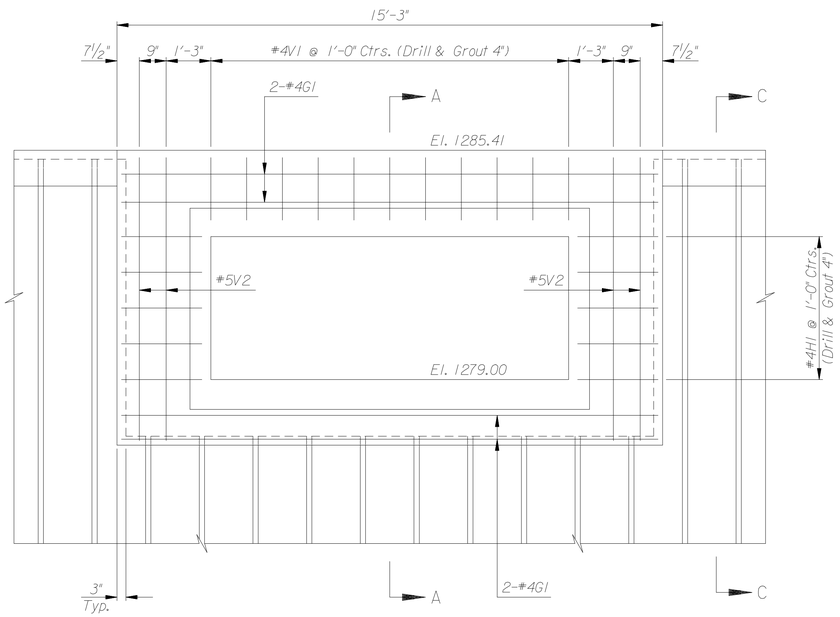

ELEVATION

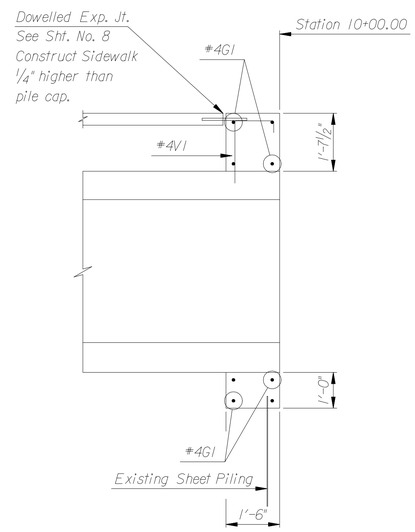

SECTION A-A

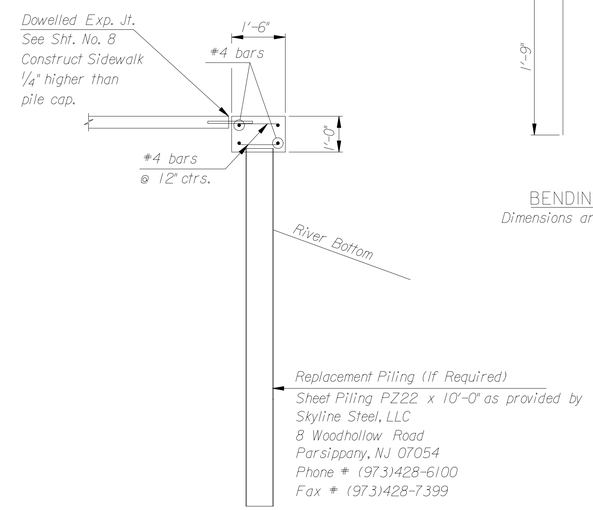

SECTION C-C

(Typical Sheetpile replacement detail)
(See Sheet 29 for potential replacement need)

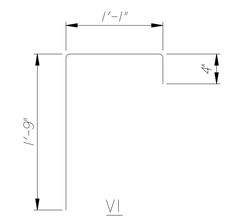

BENDING DIAGRAM
Dimensions are out to out of bars

Where replacement pile is lapped next to exisitng sheetpile 1/4" continuous fillet weld is an allowable splice method or as approved by the Engineer.

No.	Revision	By	Date

DOWNTOWN ARENA SWD OUTFALL PHASE 1 – WATERWALK PORTION

HEADWALL DETAILS

JAMES L. ARMOUR, P.E. – CITY ENGINEER
CITY OF WICHITA PROJECT NO. 468-84167

Professional Engineering Consultants, P.A.
303 S. TOPEKA • WICHITA, KANSAS 67202
316-262-2691 • FAX 316-262-3003

Designed by	MSN	Job No. 32-05493-2-42	Sht. 11 of 47
Drawn by	WLL	Date April 2006	

Saved 03-16-2006 3:19:55 PM by msn
Plot Scale 1"=2' 5-25-2006
i:\2005\05493-2\05493-002-10x4 Headwall.dgn