PROJECT NO.	SHEET NO.	TOTAL SHEETS
468-83473	13	60

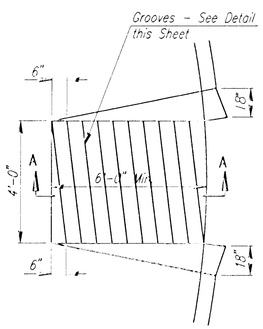

WHEELCHAIR RAMP DETAIL

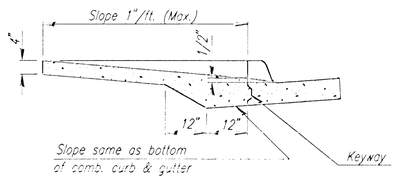

SECTION A-A

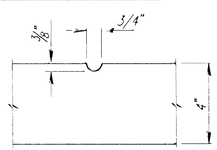

GROOVE DETAIL

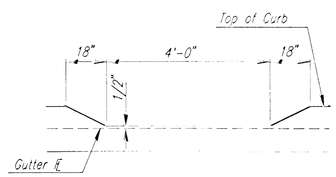

DEPRESSED CURB DETAIL

TYPICAL WHEELCHAIR RAMP DETAILS

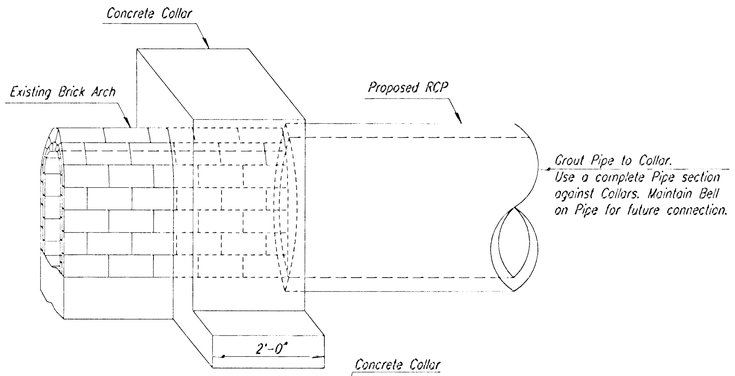

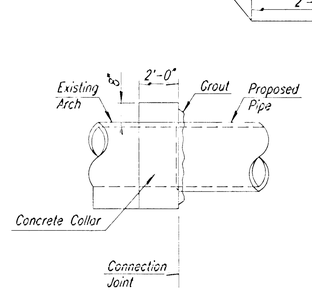

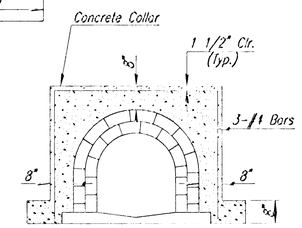

CONCRETE COLLAR DETAIL

Concrete collars shall be provided at connection to existing conduits where, in the opinion of the Engineer, a collar is required for a satisfactory connection. Class A Concrete or the mix used in concrete pavement shall be used throughout. Concrete collars will not be paid for directly, but shall be considered Subsidiary to the various pipes involved.

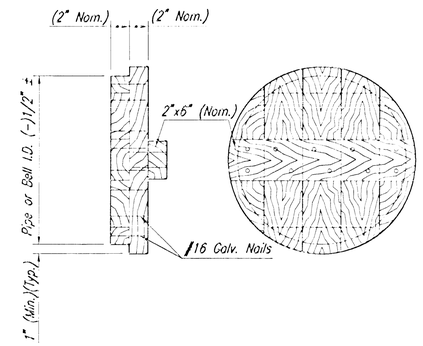

TEMPORARY REDWOOD PIPE PLUG DETAIL

Note:
The free end of all Pipe stubs installed shall be plugged with a redwood plug as shown. The plugs shall be constructed with construction grade redwood and securely nailed together with #16 galvanized nails. The Wood plug will not be paid for directly, but shall be considered Subsidiary to various pipes involved.

Note
Precast Layout is based on a Section Lay Length of 6'-0 3/4" per Section.

THE CITY OF WICHITA

CITY ENGINEER'S OFFICE
CITY HALL - SEVENTH FLOOR
455 NORTH MAIN STREET
WICHITA, KANSAS 67202
(316) 268-4501
(316) 268-4114 FAX

MISCELLANEOUS DETAILS

M. E. LINDEBAK P.E. - CITY ENGINEER

PROJECT NUMBER	INDEX CODE
468-83473	715226

DATE
JUNE 2002

DSNR: RWM DRFR: DRP SCALE:
1/1999/99/139/Ticket/miscdetails.dgn 6-14-2002 11:12:12 LAST REV: 11-11-02 BY: drp