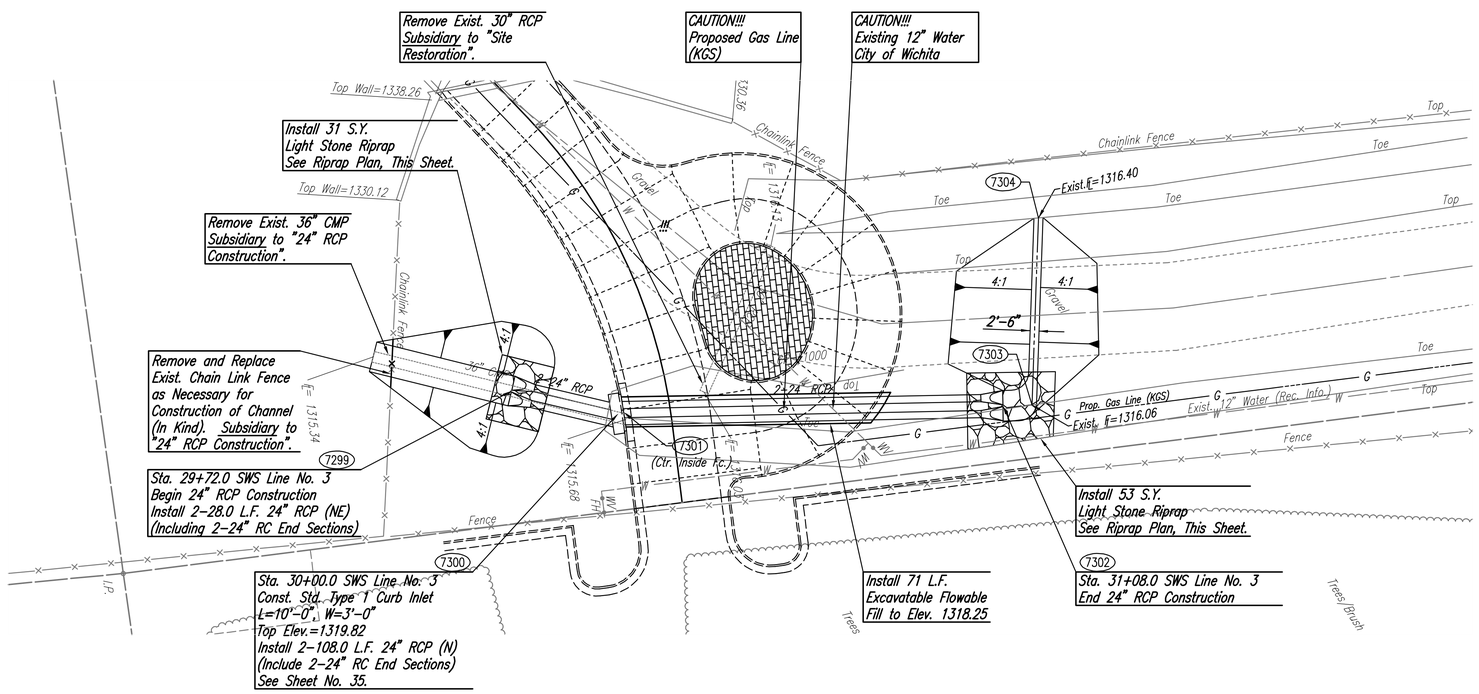

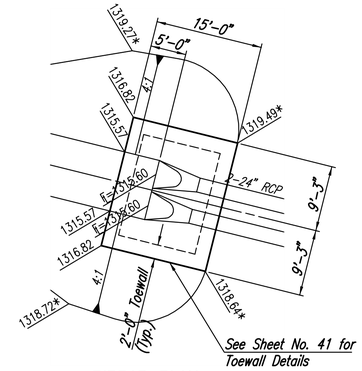

RIPRAP PLAN

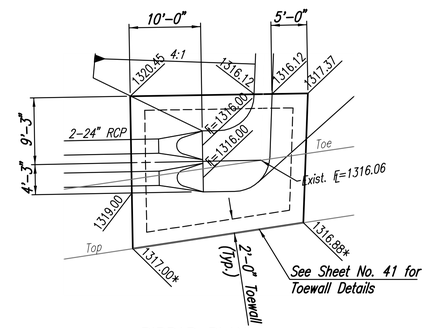

RIPRAP PLAN

SCALE:

PLAN: LAT. & LONG. 0 20 40

PROFILE: HORIZ. SAME AS ABOVE

VERT. 0 5

COORDINATE LIST		
POINT	NORTH	EAST
7299	38,643.0688	37,659.1141
7300	38,671.9938	37,668.8247
7301	38,673.4888	37,668.6569
7302	38,779.0062	37,679.2905
7303	38,787.0705	37,680.0829
7304	38,795.0058	37,628.3503

(7299) = COORDINATE POINT NO.

SEE SHEET NO. 3 FOR HORIZONTAL CONTROL

* Match Existing

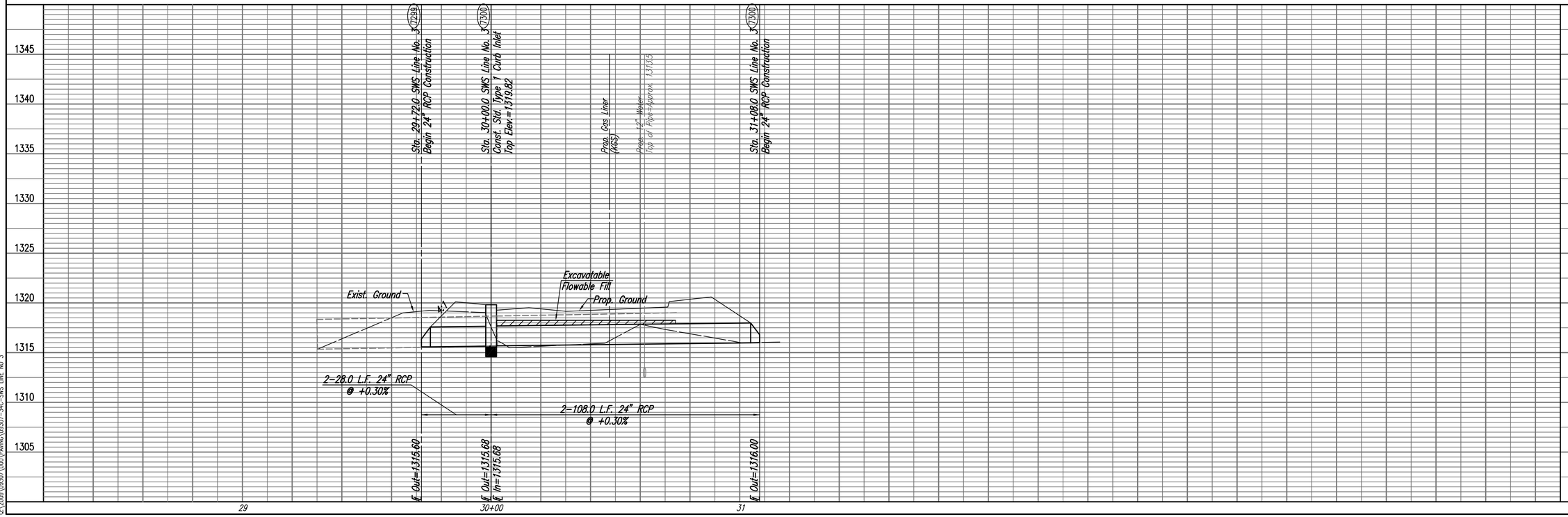

PLAN	CHECKED	BY	DATE
	CHECKED		

PROFILE	CHECKED	BY	DATE
	CHECKED		

HEARTLAND PREPAREDNESS CENTER
PAVING AND DRAINAGE IMPROVEMENTS

SWS LINE NO. 3

JAMES L. ARMOUR, P.E. – CITY ENGINEER
CITY OF WICHITA PROJ. NO. 472-84898

Professional Engineering Consultants, P.A.
303 S. TOPEKA • WICHITA, KANSAS 67202
316-262-2691 • FAX 316-262-3003

Designed By BMM
Drawn By BJS
Job No. 35-09307
Date December 2009

Sheet 34 of 59

Saved 01-18-2011 5:45:28 PM by BJS
Plot Scale 1:20 1-18-2011 6:05:37 PM by BILL_J_SEYSON
Q:\2009\09307\000\PAVING\09307-34C-SWS LINE NO 3