FHWA REGION NO.	STATE	PROJECT NO.	FISCAL YEAR	SHEET NO.	TOTAL SHEETS
7	KANSAS	87N-0495-01	2011	51	64

HSIP-N049 (501)

PERFORATED SQUARE STEEL TUBE (P.S.S.T.) POST SETUP

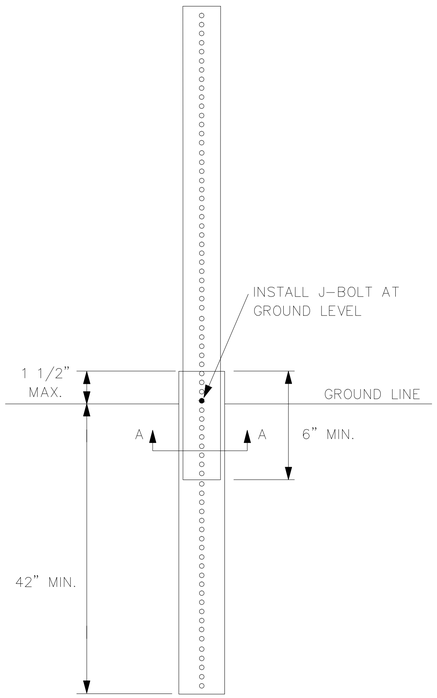

P.S.S.T. DETAIL

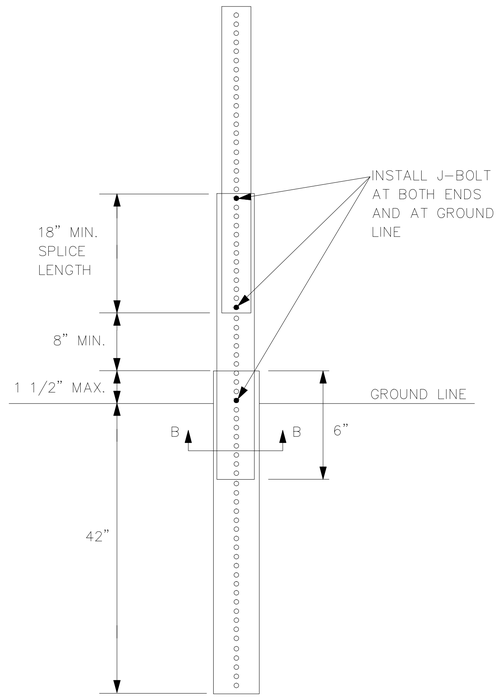

TELESCOPING P.S.S.T. DETAIL

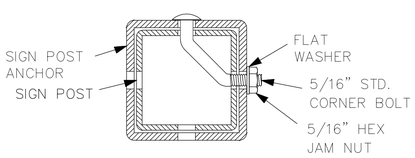

SECTION A–A

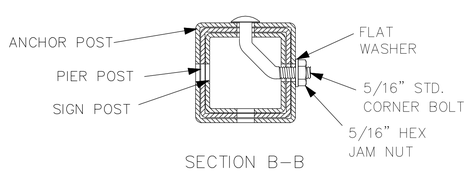

SECTION B–B

DETAILS FOR 2", 2 1/4", OR 2 1/2" SIGN POST

NOTE:

SIGN POSTS, POST ANCHORS, AND POST ANCHOR SLEEVES:

THE SIGN POSTS, POST ANCHORS, AND POST ANCHOR SLEEVES SHALL CONFORM TO (1) HOT ROLLED CARBON STEEL ASTM A–570 GRADE 33 OR ASTM STRUCTURAL QUALITY C 1021 WITH A HOT–DIPPED GALVANIZING CONFORMING TO ASHTO M–120 WITH AN INLINE SYSTEM FOLLOWED BY A CHROMATE CONVERSION AND A CROSS–LINKED POLYURETHANE ACRYLIC EXTERIOR COATING OR (2) A GALVANIZED FINISH COLD ROLLED CARBON STEEL ASTM A–446 GRADE A WITH A GALVANIZING CONFORMING TO ASTM A 525, DESIGNATION G–90.

THE SIGN POST SHALL HAVE 7 /16" DIA. HOLES OR 7 /16" DIA. EMBOSSED RING (DIE–CUT KNOCKOUTS) AT 1" CENTERS ON ALL FOUR SIDES FOR THE TOTAL LENGTH OF THE POST. THE CORNER BOLTS, NUTS, AND WASHERS SHALL BE BID SUBSIDIARY.

ALL HOLES SHALL BE DRILLED OR PUNCHED AND ALL WELDS, CUTS, BURRS, AND SHARP EDGES ARE TO BE SMOOTHED OFF BEFORE APPLICATION OF FINISH.

BASIS OF ACCEPTANCE:

ACCEPTING OF THE STEEL POSTS, ANCHORS, SLEEVES, AND FASTENERS FURNISHED TO COMPLY WITH THE ABOVE REQUIREMENTS WILL BE BASED ON RECEIPT AND APPROVAL OF A TYPE D CERTIFICATION AS DESCRIBED IN SECTION 2600 OF THE STANDARD SPECIFICATIONS FOR STATE ROAD AND BRIDGE CONSTRUCTION (2007) AMD VISUAL INSPECTION FOR CONDITION AND DIMENSIONAL REQUIREMENTS.

WOOD POST SETUP

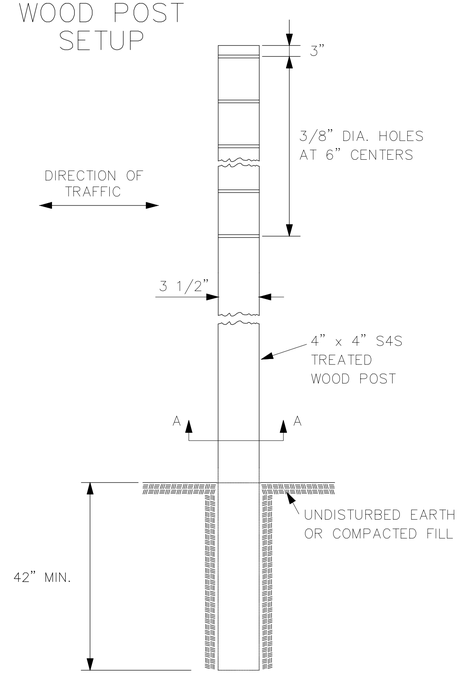

SIDE ELEVATION

4" X 4" WOOD POST IN SOIL

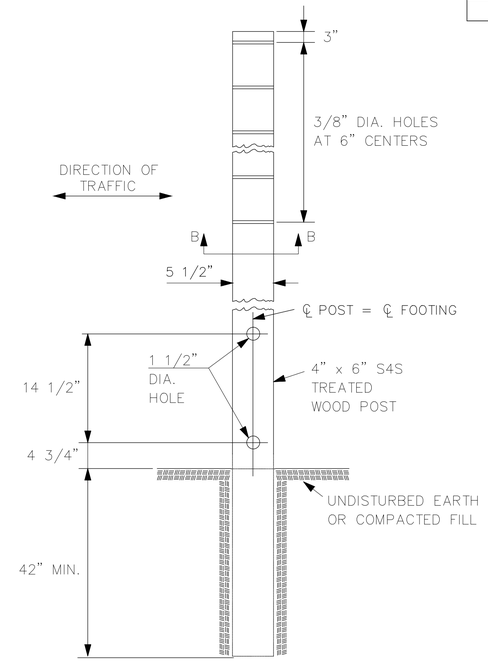

SIDE ELEVATION

4" X 6" WOOD POST IN SOIL

NOTE:

ALL SIGN MOUNTING HOLES IN THE WOOD POSTS SHALL BE DRILLED PRIOR TO TREATING.

BREAKAWAY HOLES AND FIELD CUTS SHALL BE TREATED IN ACCORDANCE WITH THE PRESERVATIVE TREATMENT SPECIFICATIONS.

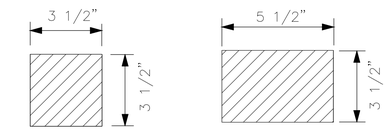

SECTION A–A

SECTION B–B

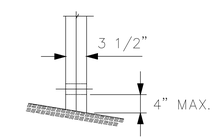

FRONT ELEVATION

3 LB/F U–CHANNEL SETUP

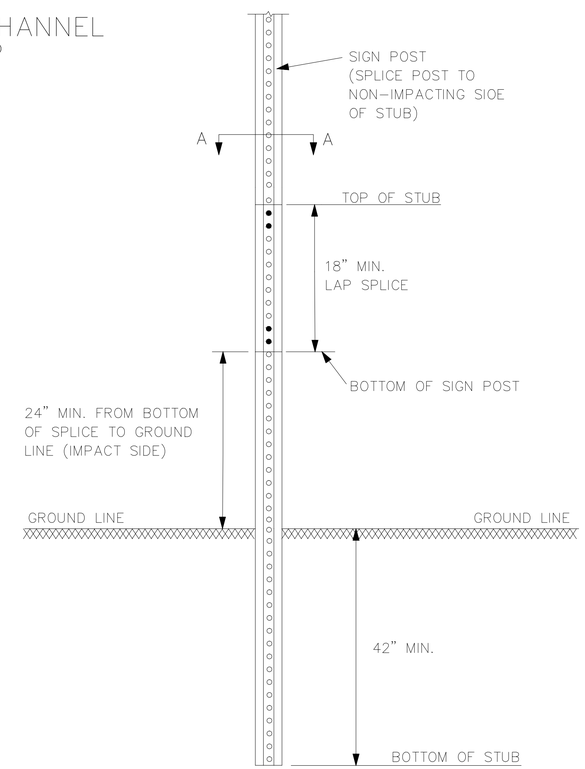

NOTE:

THE LAP SPLICE IS 18" MIN. AND IS FASTENED BY FOUR 5 /16" DIA. GALVANZIED A449 BOLTS (SAE J429 GRADE 5) OR GALVANIZED A325 BOLTS.

TWO BOLTS AT BOTH ENDS OF THE SPLICE THROUGH THE HOLES NEAREST THE ENDS OF THE SPLICE.

SPACERS WILL BE USED OVER THE BOLTS BETWEEN THE SPLICED PIECES OF U–CHANNEL. THREADED OR UNTHREADED SPACERS MAY BE USED. DO NOT SUBSTITUTE PIPE OR OTHER "THINGS" FOR THE SPACERS.

SECTION A–A

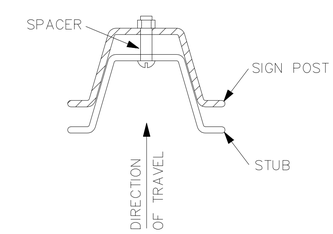

NO.	DATE	REVISIONS	BY	APP'D
3				
2				
1	4–20–09	REVISED J–BOLT DETAIL	J.M.	A.A.A.

KANSAS DEPARTMENT OF TRANSPORTATION

APPROVED TEMPORARY POST SETUPS

TE712 SH 51/64 7/3/07

FHWA APPROVAL 4–20–09		APP'D Anthony A. Alrobaire	
DESIGNED B.A.H.	DETAILED B.A.H.	QUANTITIES	TRACED
DESIGN CK.	DETAIL CK.	QUAN. CK.	TRACE CK.