PRIVATE PROJECT WATER LINE & HYDRANT PLAN TO SERVE

CVS/pharmacy®

CITY OF WICHITA PROJECT NO. 1688 PPW (607853)

CS#64720 STORE#10159 NWC 21ST AND AMIDON AVE.
WICHITA, KS
PART OF LOT 1, BLOCK A, SWEETBRIAR ADDITION
ZONED: LC LIMITED COMMERCIAL
TAX ID#123060340102500, 123060340102600

APPROVED AS NOTED
BY CITY ENGINEER OF WICHITA
& BY WICHITA FIRE DEPARTMENT

Water Mains (Engineering) 11-29-12
Water Mains (Water) 12-3-12
Fire Prot. Line 12-04-2012

NOTE TO CONTRACTORS

PUBLIC PROPERTY:
Inspection and testing for the waterline is to be provided by a Licensed Consulting Engineering Firm under contract with the Owner/Developer. Said inspection to be in accordance with the City of Wichita standard construction engineering practices and certified by a Licensed Professional Engineer licensed in the State of Kansas. No work shall be performed in dedicated easements or public right-of-way by the Contractor without such inspection nor shall any work be commenced without written authorization by the City Engineer. All Construction and Materials shall comply with the City of Wichita Specifications and Standards (on file and available in the City Engineer's Office).

PRIVATE PROPERTY:
Installation and testing for the fire protection line is to be performed by a City of Wichita licensed fire protection contractor in accordance with the fire codes as adopted by the City of Wichita. All materials and construction practices for the fire protection line shall comply with the fire codes as adopted by the City of Wichita (available from the City of Wichita Fire Department). The Contractor shall not commence work without notification and approval of the Wichita Fire Department.
Inspection of the fire protection line is to be provided by the City of Wichita Fire Department and by a licensed Consulting Engineering Firm under contract with the Owner/Developer.
The contractor shall not start work until the project inspector is assigned to the project and present on the site. Any work done without inspection will be required to be uncovered for inspection.

PROJECT DIRECTORY

OWNER
CVS REALTY, CO.
1165 N CLARK ST SUITE 305
CHICAGO, IL 60610
(312) 953-6322
CONTACT: MR. RICHARD E. SMART

DEVELOPER
VELMEIR COMPANIES
5757 W. MAPLE, SUITE 800
WEST BLOOMFIELD, MI 48322
(248) 794-9768
CONTACT: MR. JIM COLLIER

ARCHITECT
NORR, LLC
719 GRISWOLD STREET
DETROIT, MI 48226
(313) 324-3100
CONTACT: MR. SCOTT ROBACH

CIVIL ENGINEER
PREMIER CIVIL ENGINEERING, LLC
308 TCW COURT
LAKE SAINT LOUIS, MO 63367
(314) 925-7452
CONTACT: MR. MATT FOGARTY

SURVEYOR
SAVOY COMPANY, P.A.
433 S. HYDRAULIC
WICHITA, KS 67211
(316) 265-0005
CONTACT: MR. MARK SAVOY

MUNICIPALITY
CITY OF WICHITA, KS

GEOTECHNICAL/ENVIRONMENTAL ENGINEER
TERRACON CONSULTANTS
1815 S. EISENHOWER
WICHITA, KS 67209
(316) 262 0717
CONTACT: GEORGE A. EL TANNOURY, P.E.

CITY OF WICHITA TRAFFIC ENGINEER
CONTACT: PAUL GUNZELMAN, P.E.
455 N. MAIN ST. 7TH FLOOR
WICHITA, KS 67202
316-268-4393

UTILITY PROVIDERS

WESTAR ENERGY
(316) 261-6734
CONTACT: MRS. MARSHA JESSE

KANSAS GAS SERVICE
(316) 832-3126
CONTACT: MR. JIM COE

AT&T
(314) 957-3789
CONTACT: MR. MARK ADAMS

PUBLIC WORKS & UTILITIES
STORMWATER MANAGEMENT DIVISION
CITY HALL, 8TH FLOOR
455 N. MAIN
WICHITA, KANSAS 67202
(316) 268-4498
CONTACT: SCOTT LINDEBAK

CITY OF WICHITA WATER UTILITIES
CITY HALL, 8TH FLOOR
455 N. MAIN
WICHITA, KANSAS 67202
(316) 268-4555
CONTACT: GREG LOLLEY

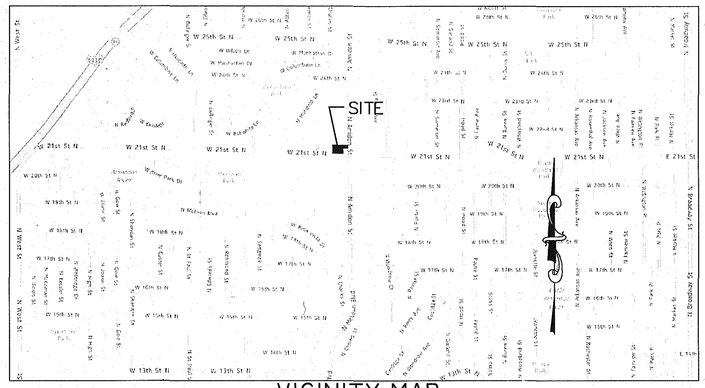

VICINITY MAP
NOT TO SCALE

SITE DISTURBED AREA=1.52 ACRES

On Site Benchmarks:

B.M. #1: Square Cut Top Curb 76'W. & 18'S. of the S.E. Corner of Lot 1, Block A, Sweertbria· Addition, Elevation = 1315.25 (NAVD88)

B.M. #2: Square Cut on Top of the Light Pole Base 90'E. & 34'N. of the N.W. Corner of Subject Property, Elevation = 1316.54 (NAVD88)

AS-BUILT PLANS:
Contractor: CK Contracting
Inspector: Dakota Zimmerman/ Ruggles & Bohm, P.A.
Date: 8/2/13

American Darling fire hydrant

EXIST. UTILITY SYMBOL LEGEND

G = GAS MAIN
W = WATER MAIN
SS = SANITARY SEWER
SWS = STORM WATER SEWER
UGE = UNDER GROUND ELECTRIC
UGT = UNDER GROUND TELEPHONE

- B.M. ..... BENCH MARK
- TELE. PED ..... TELEPHONE PEDESTAL
- CATV ..... CABLE TELEVISION PEDESTAL
- E.B. ..... ELECTRIC BOX
- F.H. ..... FIRE HYDRANT
- ..... GUY ANCHOR
- ..... HIGH LINE POLE
- ICV ..... IRRIGATION CONTROL VALVE
- L.P. ..... LIGHT POLE
- ..... POWER POLE
- ..... SIGN
- T.S. ..... TRAFFIC SIGNAL
- T.S.C.B. ..... TRAFFIC SIGNAL CONTROL BOX
- W.M. ..... WATER METER
- W.V. ..... WATER VALVE
- XFMR ..... ELECTRIC TRANSFORMER
- KGE M.H. ..... KANSAS GAS ELECTRIC MANHOLE
- SS M.H. ..... SANITARY SEWER MANHOLE
- SWS M.H. ..... STORM WATER SEWER MANHOLE
- BH#X ..... BORE HOLE

SHEET INDEX

C-3A WATER COVER SHEET
C-3B WATER PLAN SHEET
C-9.1 UTILITY DETAILS

SITE COVERAGE CALCULATIONS

FLOOR TO AREA RATIO
13,600/58,370=0.23 FAR

Existing Green Space
Existing Impervious Area Coverage (1.34 Acres) = 100%

Proposed Impervious Area Parking Lot and Building
0.76 Acres of Parking Area and 0.31 Acres of Building

Proposed Pervious Space
0.01 Acres Green Space
0.20 Acres Pervious Pavement

Proposed percent of Impervious Area Coverage=80%

PREPARED BY:

PREMIER CIVIL ENGINEERING

308 TCW Court
Lake Saint Louis, MO 63367
Phone: (314) 925-7444 Fax: (314) 925-7457

ALWAYS CALL BEFORE YOU DIG
CALL 811
ONE CALL KANSAS

DATE: 09-06-12
PCE PROJECT NUMBER: 113301

SHEET NUMBER: C-3A TITLE: WATER COVER SHEET

REVISIONS:

NO.	DESCRIPTION:	INITIALS:	DATE:
2	REVISED SHEETS C-3A AND C-3B	JB	09-28-12
3	REVISED SHEETS C-3B	JB	11-26-12

NOTE
Underground utilities and structures have been plotted from available information and therefore, their location must be considered approximate only. It is the responsibility of the individual contractors to notify the utility companies before actual construction.

ELECTRONIC DRAWING NOTE:
ELECTRONIC MEDIA OR DIGITAL DRAWINGS ARE INSTRUMENT OF PROFESSIONAL SERVICES. OWNERSHIP OF SUCH WILL BE RETAINED BY THE CIVIL ENGINEER AND MAY NOT BE RELEASED TO CONTRACTORS. CONTRACTORS ARE ADVISED TO CREATE BIDS BASED ON THE USE OF PAPER COPIES OF THE PLANS.

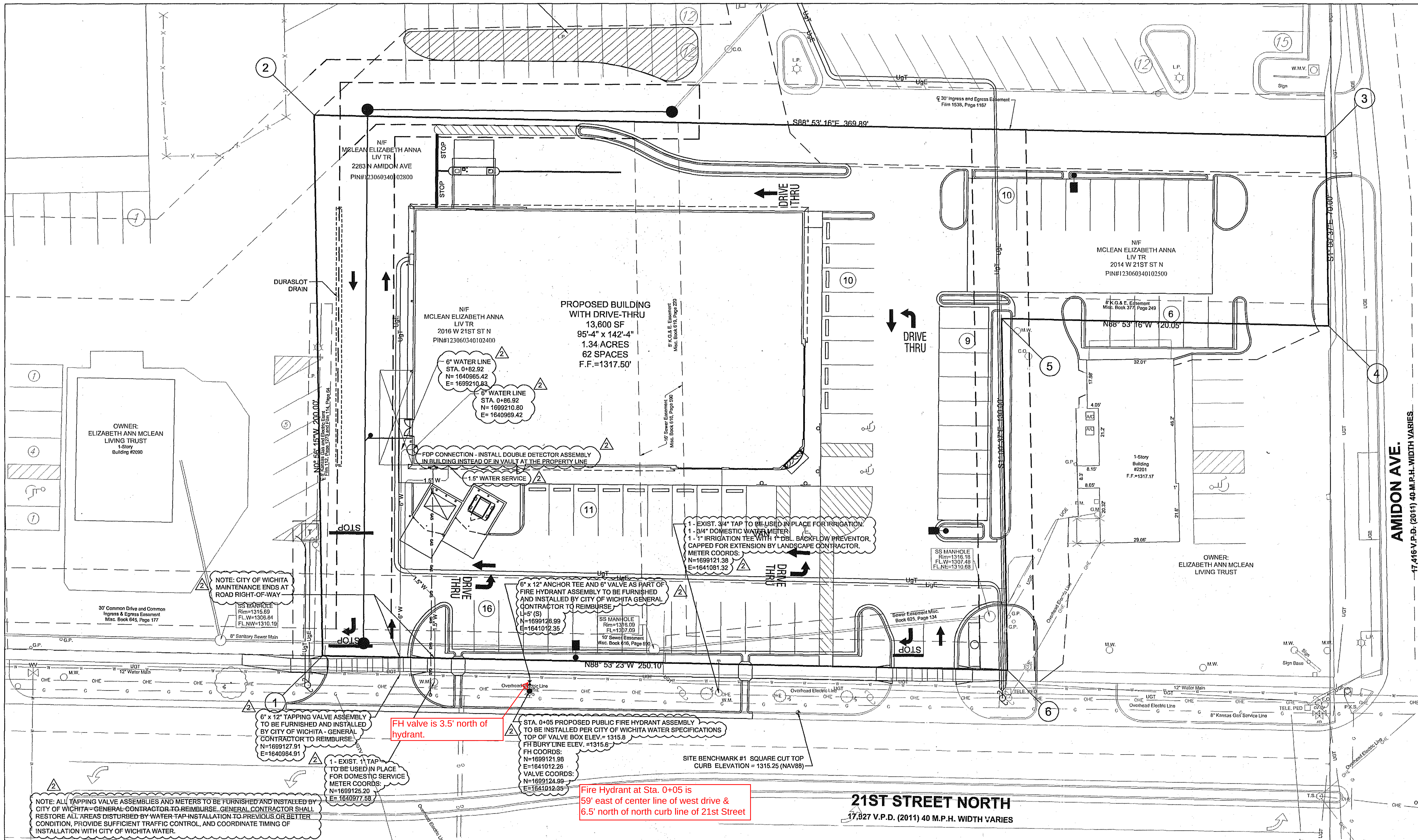

UTILITY NOTES:

1. ALL FILL MATERIAL IS TO BE IN PLACE AND COMPACTED BEFORE INSTALLATION OF PROPOSED UTILITIES.
2. CONTRACTOR SHALL NOTIFY THE UTILITY AUTHORITIES INSPECTORS 72 HOURS BEFORE CONNECTING TO ANY EXISTING LINE.
3. CONTRACTOR SHALL MAINTAIN A MINIMUM OF 3'-6' COVER ON ALL WATERLINES AND 3'-6' ON ALL SANITARY SEWER LINES.
4. CONTRACTOR SHALL COORDINATE WITH BUILDING ARCHITECT AND TELEPHONE COMPANY FOR EXACT LOCATIONS OF TELEPHONE ENTRY TO THE BUILDING. CONTRACTOR SHALL BE RESPONSIBLE FOR ANY CONDUITS, PULL WIRES, TRENCHING, BACKFILL, ETC. REQUIRED BY TELEPHONE CO.
5. CONNECTION FROM THE METER TO SITE UTILITY LINES SHALL BE MADE BY BUILDING CONTRACTOR.
6. EXISTING UTILITIES SHALL BE VERIFIED IN FIELD PRIOR TO INSTALLATION OF ANY NEW LINES.
7. REFER TO INTERIOR MECHANICAL, ELECTRIC AND PLUMBING DRAWINGS FOR TIE-IN OF ALL UTILITIES.
8. THE CONTRACTOR IS SPECIFICALLY CAUTIONED THAT THE LOCATION AND/OR ELEVATION OF EXISTING UTILITIES AS SHOWN ON THESE PLANS IS BASED ON RECORDS OF THE VARIOUS UTILITY COMPANIES, AND WHERE POSSIBLE, MEASUREMENTS TAKEN IN THE FIELD. THE INFORMATION IS NOT TO BE RELIED ON AS BEING EXACT OR COMPLETE. THE CONTRACTOR MUST CALL THE APPROPRIATE UTILITY COMPANIES AT LEAST 72 HOURS BEFORE ANY EXCAVATION TO REQUEST EXACT FIELD LOCATION OF UTILITIES. IT SHALL BE THE RESPONSIBILITY OF THE CONTRACTOR TO LOCATE ALL EXISTING UTILITIES WHICH CONFLICT WITH THE PROPOSED IMPROVEMENTS SHOWN ON THE PLANS.
9. ALL NECESSARY INSPECTIONS AND/OR CERTIFICATIONS REQUIRED BY CODES AND/OR UTILITY SERVICE COMPANIES SHALL BE PERFORMED PRIOR TO ANNOUNCED BUILDING POSSESSION AND THE FINAL CONNECTION OF SERVICE.
10. CONTRACTOR SHALL COORDINATE WITH BUILDING ARCHITECT AND KANSAS GAS SERVICE FOR EXACT LOCATION OF GAS ENTRY. G.C. TO INCLUDE IN BID FOR CONTRACTOR ANY GAS PIPING, CONDUITS, TRENCHING, BACKFILLING, ETC. REQUIRED BY KANSAS GAS SERVICE.
11. CONTRACTOR SHALL COORDINATE WITH BUILDING ARCHITECT AND ELECTRIC COMPANY FOR EXACT LOCATION OF ELECTRIC ENTRY. G.C. SHALL INCLUDE FOR ANY CONDUITS, TRENCHING, BACKFILLING, CABLES, ETC. REQUIRED BY ELECTRIC COMPANY IN HIS/HER BID.
12. SEE MEP PLANS FOR GAS SERVICE SIZING.
13. ALL UTILITY SEWER TRENCH BACKFILL SHALL HAVE GRANULAR BACKFILL AND BE MECHANICALLY COMPACTED.
14. THE CONTRACTOR SHALL VERIFY THE LOCATION, CONDITION AND ELEVATION OF ALL PROPOSED SEWER CONNECTION POINTS PRIOR TO THE START OF CONSTRUCTION. ANY DISCREPANCIES THAT WOULD INTERFERE WITH THE PROPOSED SEWER DESIGN SHALL IMMEDIATELY BE BROUGHT TO THE ATTENTION OF THE ENGINEER.
15. THE EXISTING INLETS NOTED ARE TO BE INSPECTED BY CITY OF WICHITA AND A DETERMINATION MADE IF REPLACEMENT IS NEEDED. EXISTING TOP OF STRUCTURES AND ALL FLOWLINES OF STRUCTURES ARE TO REPLICATED PER PLANS IF REPLACEMENT IS REQUIRED. CONTRACTOR TO INCLUDE REMOVAL AND REPLACEMENT OF STRUCTURES IN BID.
16. ALL PERMIT FEES AND COSTS ASSOCIATED WITH BRINGING UTILITY, SEWER AND WATER SERVICES TO THE BUILDING SHALL BE THE RESPONSIBILITY OF THE CONTRACTOR. ALL FEES AND COSTS SHALL BE INCLUDED IN THE CONTRACTOR'S BID.
17. G.C. IS TO PROVIDE TRENCH, WIRE, AND CONDUIT FOR TELEPHONE AND ELECTRICAL SERVICES, BACKFILL AND GRADE SMOOTH FOR A COMPLETE TELEPHONE AND ELECTRIC INSTALLATION.
18. ALL LANDSCAPE ISLANDS AND GREEN SPACE IN THE RIGHT-OF-WAY SHALL BE IRRIGATED.
19. THE CONTRACTOR SHALL INCLUDE FOR TELEPHONE INSTALLATION COSTS BY THE LOCAL PHONE COMPANY IN HIS/HER BID.
20. THE CONTRACTOR SHALL INCLUDE THE COST ESTIMATE PROVIDED BY WESTAR ENERGY IN HIS/HER BID FOR THE RELOCATION OF ANY OVERHEAD ELECTRIC OR GUY WIRES.

PROPERTY CORNER COORDINATE POINT TABLE

POINT NO.	EASTING	NORTHING	DESCRIPTION
1	1640936.73	1699134.85	PROPERTY CORNER
2	1640741.94	1699136.49	PROPERTY CORNER
3	1641111.72	1699129.31	PROPERTY CORNER
4	1641112.95	1699059.33	PROPERTY CORNER
5	1640992.95	1699061.66	PROPERTY CORNER
6	1640995.24	1698931.69	PROPERTY CORNER

NOTE

Underground utilities and structures have been plotted from available information and therefore, their location must be considered approximate only. It is the responsibility of the individual contractors to notify the utility companies before actual construction.

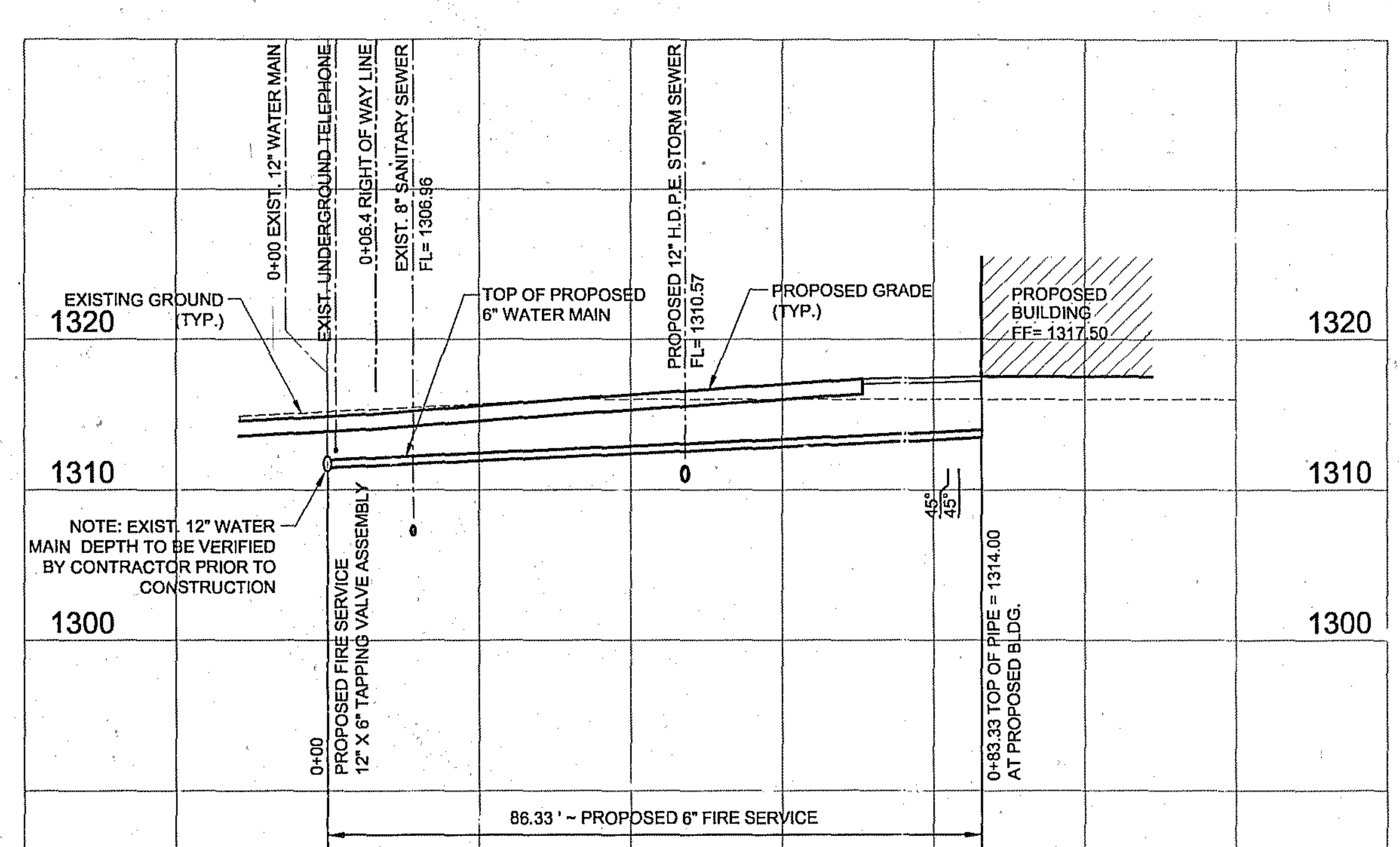

PROPOSED 6" FIRE SERVICE PROFILE

PROFILE HORIZ. SCALE: 1" = 20'
PROFILE VERTICAL SCALE: 1" = 10'

NOTES:
1. UNLESS OTHERWISE NOTED, ELEVATIONS ARE SHOWN TO TOP OF PIPE.
2. GENERAL CONTRACTOR SHALL VERIFY THAT ALL PROPOSED & EXISTING UTILITY CROSSINGS WILL NOT INTERFERE WITH PROPOSED WATER LINE

N

1" = 20'
20 10 0 20 40
SCALE IN FEET

CVS pharmacy

NORTHERN 13,600 LEFT SIDE DRIVE-THRU

STORE NUMBER: 10159

NWC 21ST ST AND AMIDON AVE
WICHITA, KS
PROJECT TYPE: NEW CONSTRUCTION
DEAL TYPE: Fee for Service/GL/Type B

CS PROJECT NUMBER: 064720

ARCHITECT OF RECORD

NORR
ARCHITECTS ENGINEERS PLANNERS

CONSULTANT:

PREMIER CIVIL ENGINEERING
308 TCW Court
Lake Saint Louis, MO 63367
Phone: (314) 925-7444 Fax: (314) 925-7457

DEVELOPER:

VELMEIR COMPANIES

ENGINEERS AUTHENTICATION
The responsibility for professional engineering liability on this project is hereby limited to the set of plans authenticated by the seal, signature, and date hereunder attached. Responsibility is disclaimed for all other engineering plans involved in this project and specifically excludes revisions after this date unless reauthenticated.

STEVE MARION P.E.
ENGINEER
PE2006007195

REVISIONS:
- 2 09-28-12 REROUTED WATER LINES
- 3 11-26-12 RELOCATED PYLON SIGN

DRAWING BY:	J.BRADDOCK
DATE:	09-06-12
JOB NUMBER:	113301

TITLE:

PRIVATE PROJECT WATER LINE & HYDRANT PLAN

SHEET NUMBER: C-3B

COMMENTS:

FIRE HYDRANTS REQUIRED				
STATION	BURY LINE ELEVATION	TOP OF PIPE ELEVATION	FIRE HYDRANT BURY REQUIRED*	VALVE STEM EXT. REQUIRED (#)*

MATERIALS LIST
1– MJ ANCHOR TEE OR TANGENTIAL OUTLET ("D"x 6")
1– 6" MJ GATE VALVE
1– 6" VALVE BOX AND VALVE STEM EXTENSION IF REQUIRED *
6" DICL SJ PIPE (LENGTH VARIABLE)
1– FIRE HYDRANT
1– 6" ANCHOR COUPLING*
2– 90° BENDS*
6" DICL SJ SPOOL PIPE WITH ADEQUATE JOINT RESTRAINT *
CONCRETE BLOCKING (AS REQUIRED)
RIVER WASHED PEA GRAVEL (AS REQUIRED)

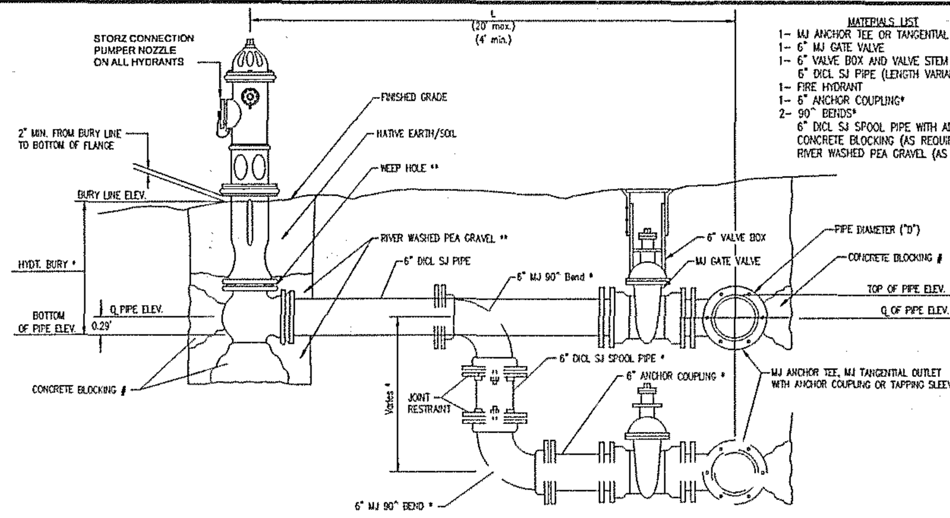

* IF THE REQUIRED HYDRANT BURY IS IN EXCESS OF 5', BUT LESS THAN 7', CONTRACTOR SHALL USE STANDARD 5' HYDRANT BURY AND HYDRANT BARREL EXTENSIONS AS NECESSARY. IF THE REQUIRED HYDRANT BURY IS GREATER THAN 7', CONTRACTOR SHALL USE 5' HYDRANT BURY, 2–MJ 90° BENDS, 6" ANCHOR COUPLING AND 6" DICL SPOOL PIPE AS NECESSARY FOR VERTICAL ADJUSTMENT. THE CONTRACTOR SHALL PROVIDE ADEQUATE THRUST BLOCKING AT HYDRANT AND MEGALUGS, ROD AND LUG OR SIMILAR RESTRANT BETWEEN 90° BENDS TO SECURE ALL FITTINGS DURING TESTING AND OPERATION. THE CONTRACTOR SHALL PROVIDE A VALVE STEM EXTENSION PER DETAIL THIS SHEET.

** CAUTION: WEEP HOLES TO BE KEPT CLEAR DURING CONSTRUCTION AND BACKFILL. CONCRETE FOR THRUST BLOCKING SHALL NOT OBSTRUCT WEEP HOLES. PLACE 1 CUBIC FOOT OF RIVER WASHED PEA GRAVEL AROUND EACH WEEP HOLE.

CONCRETE THRUST BLOCKING SHALL BE KEPT CLEAR OF BOLTS, NUTS, AND MJ ACCESSORIES.

FIRE HYDRANT ASSEMBLY

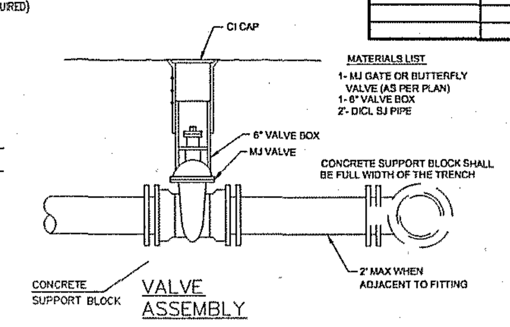

VALVE ASSEMBLY

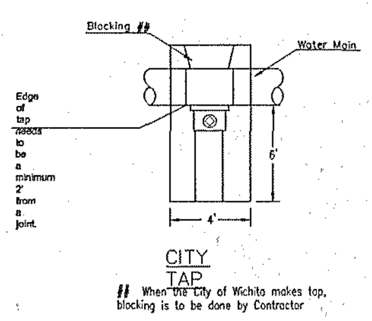

CITY TAP

\## When the City of Wichita makes tap, blocking is to be done by Contractor

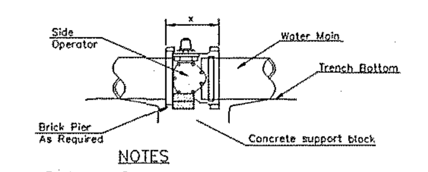

NOTES
1. This detail covers Butterfly Valve installation, inclusive, regardless of type of pipe or joint used. 24" and larger lines to be detailed on plans.
2. 6" Valve Box and Cover required per City of Wichita Std. Specifications.
3. Conc. Support Block to be full width of trench.

CONCRETE SUPPORT BLOCKING FOR BUTTERFLY VALVE INSTALLATION

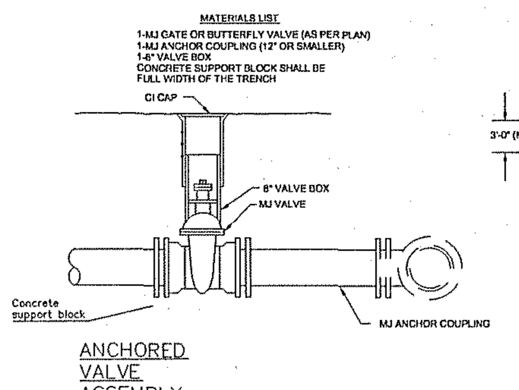

ANCHORED VALVE ASSEMBLY

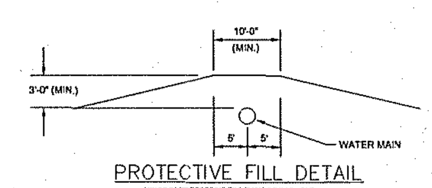

PROTECTIVE FILL DETAIL

MINIMUM PROTECTIVE FILL SHALL BE PROVIDED IN ALL INSTANCES WHERE COVER OVER THE PROP. WATER LINE IS LESS THAN 3'. (COST SUBSIDIARY TO PIPE INSTALLATION)

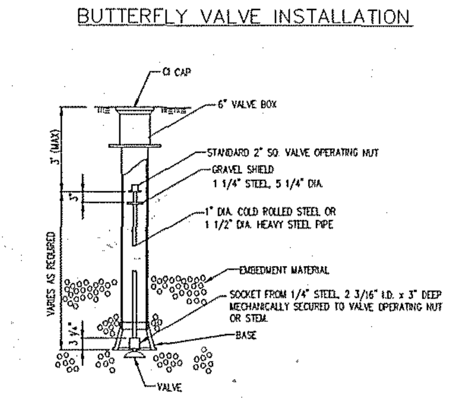

VALVE STEM EXTENSION DETAIL

NOTE: ONE VALVE STEM EXTENSION FOR EACH VALVE BURIED GREATER THAN 5'.

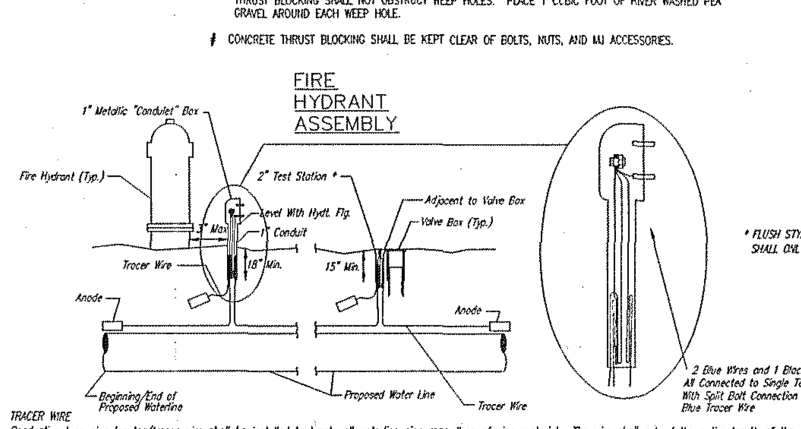

* FLUSH STYLE TEST STATIONS SHALL ONLY BE USED IN PAVEMENT.

TRACER WIRE

Conductive type pipe locator/tracer wire shall be installed to locate all waterline pipe regardless of pipe material. The wire shall extend the entire length of the proposed pipe. The wire shall be taped to the waterline and pulled with the pipe. Split–bolt connectors shall be used at splice locations. Electrical tape shall cover all splices so no bare wire is exposed. Test stations shall be installed adjacent to all fire hydrants along the waterline and at blowoffs or valves near the ends of the waterlines. Any exceptions to the location of test stations shall be approved by the engineer. At each test station, the tracer wire shall be connected to a 3 lb. Zinc or magnesium anode. Anodes shall also be attached to the tracer wire at both the beginning and the end of the proposed waterline. A typical layout of the tracer wire and test station is provided in the above figure.

WIRE

The tracer wire shall be Blue No. 12 THHN annealed soft copper wire with thermal plastic insulation or Blue No. 12 AWG CCS with 30 mil HDPE insulation. The insulation shall be heat, oil, and gasoline resistant as manufactured by Temple Electric or approved equal. To allow for grade adjustment, a minimum of 12" of excess wire shall be coiled at the bottom of the test station for all wires. The insulation sheathing shall be removed such that 1" bare copper wire at all points of connection. Contractor shall attach wire being installed with proposed water main to any tracer wire installed with adjacent waterline projects.

TEST STATIONS

The test station for fire hydrant applications shall be a 1 inch galvanized "condulet" style test station as manufactured by AGRA Industries with a removable solid cover having two leads extending from the face or approved equal. The test station for valve applications shall be 2 inch flush style test station T2PS3B as manufactured by HANDLEY Industries or approved equal. The "condulet" style test station shall be attached to a 1 inch rigid galvanized conduit with a minimum length of 36" and plastic end bushing. The flush style shall have the word "WATER" stamped or molded into the lid. All test stations shall be manufactured using molded blue tops or sufficiently coated with blue enamel paint. The tracer wire and the anode wire shall be installed to allow 10 inches of wire within the test station. In concrete environments such as sidewalks or in the downtown area the contractor shall use the flush style test station. The location of all test stations shall be approved by the engineer, recorded, and shown in the as–built drawings.

ANODES

The anodes shall be 3 lb. bare zinc or magnesium. The anodes shall be buried at the same elevation as the waterline at each test station. The anodes shall be connected to Black No. 12 THHN annealed soft copper wire which shall be extended to the test station.

TRACER WIRE DETAIL

COST IS SUBSIDIARY TO PIPE INSTALLATION

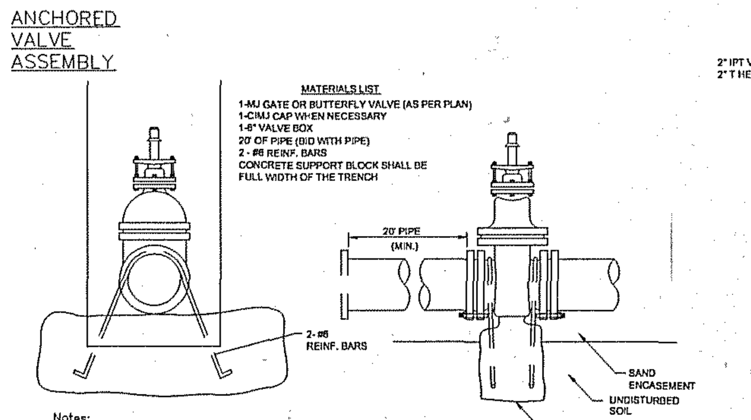

Notes:
1. Concrete Block at Valve to have sufficient bearing in undisturbed soil to prevent thrust movement as shown in table at right. Field Engineer to determine thrust loading of undisturbed soil and final size of thrust block.
2. The thrust block shall be constructed such that bolts, nuts, and other MJ accessories are kept clear of concrete.
3. All valves at dead ends and at other locations as called out on the plans shall be blocked as shown here.

THRUST AT VALVES	
VALVE	THRUST AT 150 #/in²
4"	1609 lbs.
6"	4245 lbs.
8"	7540 lbs.
12"	16965 lbs.

ANCHORED VALVE ASSEMBLY, SPECIAL

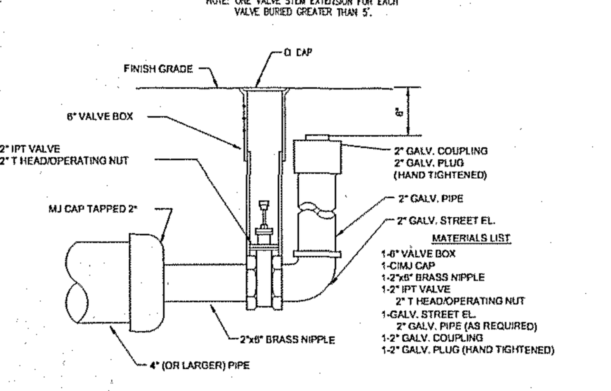

MATERIALS LIST
1-6" VALVE BOX
1-CIMJ CAP
1-2"x6" BRASS NIPPLE
1-2" IPT VALVE
2" T HEAD/OPERATING NUT
1-GALV. STREET EL.
2" GALV. PIPE (AS REQUIRED)
1-2" GALV. COUPLING
1-2" GALV. PLUG (HAND TIGHTENED)

2" BLOWOFF ASSEMBLY

STANDARD WATER ASSEMBLY DETAIL
CITY OF WICHITA
PUBLIC WORKS & UTILITIES ENGINEERING DIVISION
CITY ENGINEER: JAMES L. ARMOUR, P.E., L.S.
PROJECT NUMBER | OCA NUMBER | DATE 12/2011
CITY ENGINEER'S OFFICE
CITY HALL - SEVENTH FLOOR
455 NORTH MAIN STREET
WICHITA, KANSAS 67202-1620
(316) 268-4501
SHEET _ of _

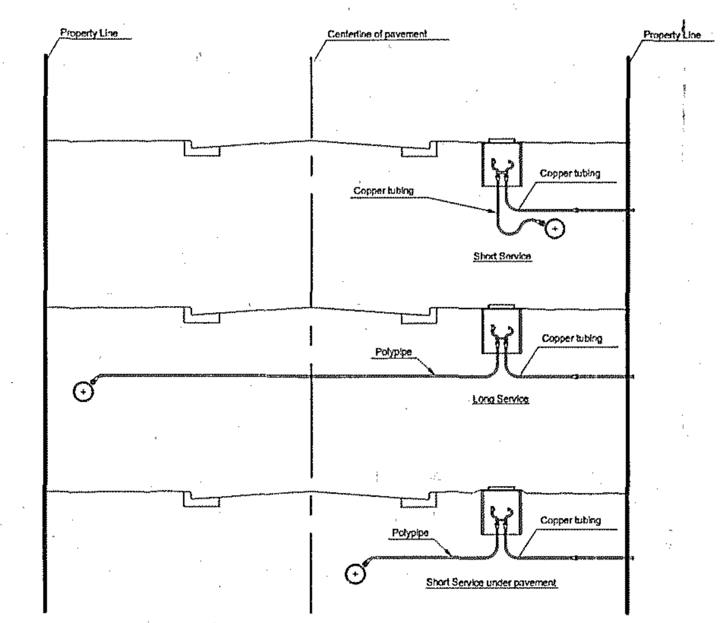

SERVICE TYPES

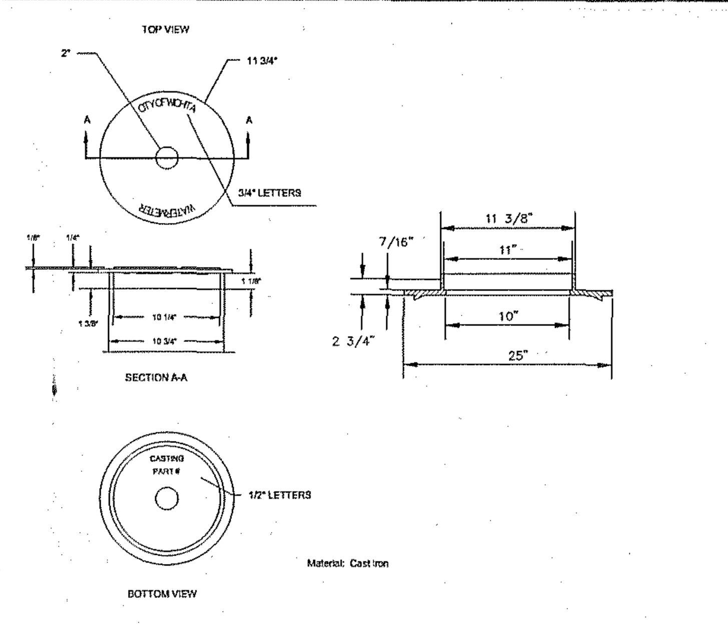

NOT TRAFFIC RATED
RING & LID FOR 1" METER BOX

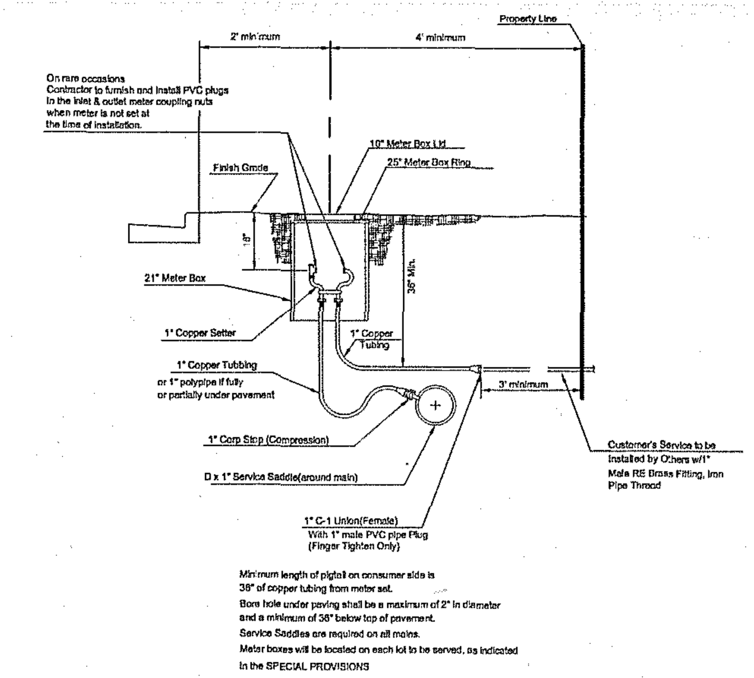

Minimum length of pigtail on consumer side is 36" of copper tubing from meter set.
Bore hole under paving shall be a maximum of 2" in diameter and a minimum of 36" below top of pavement.
Service Saddles are required on all mains.
Meter boxes will be located on each lot to be served, as indicated in the SPECIAL PROVISIONS

TYPICAL 1" METER SETTING

1 - Ø Mueller Thread Corporation Stop
- Ø Type "K" Copper Tubing
1 - Ø Copper to Iron Union (Male)
1 - Ø Brass Curb Stop (Iron to Iron)
2 - Øx4" Brass Nipple
Air Release
2 - Ø Brass Elbows (90°)
1 - 1"x6" Brass Nipple
1 - 30" Monitor Cover
1 - 20" Meter Lid

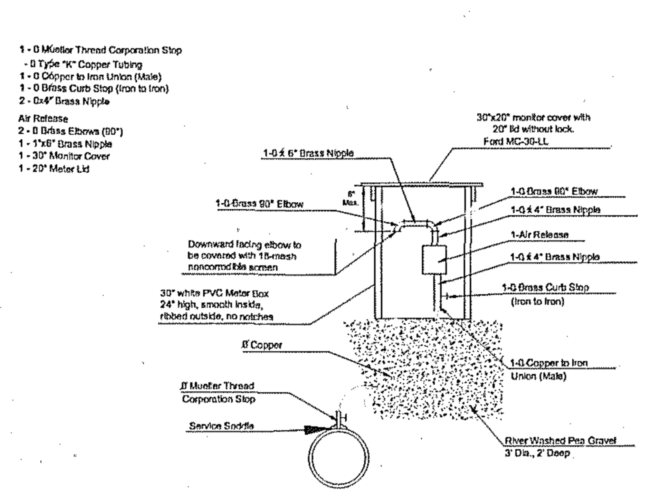

MATERIALS FOR 1" or 2" AIR RELEASE ASSEMBLY
Ø = 1" or 2"

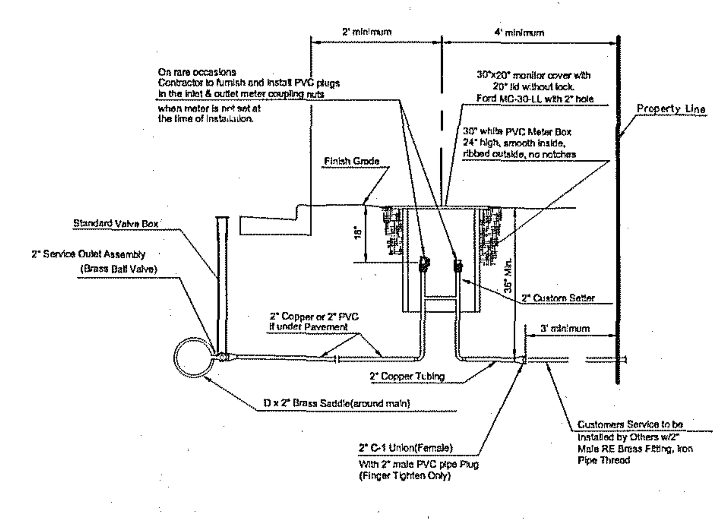

TYPICAL 2" METER SETTING

NOTE: ONE VALVE STEM EXTENSION FOR EACH VALVE BURIED GREATER THAN 5'.

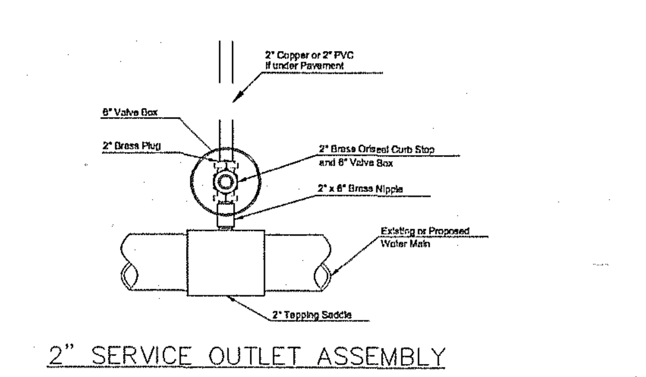

2" SERVICE OUTLET ASSEMBLY

NOTE: Where the 2" Service Outlet Assembly is to be used to connect a 2" main to another main, the 2" valve shall be a 2" IPT Gate Valve. 2" ball or globe valves shall not be approved for this use.

STANDARD WATER SERVICE DETAIL
CITY OF WICHITA
PUBLIC WORKS & UTILITIES ENGINEERING DIVISION
CITY ENGINEER: JAMES L. ARMOUR, P.E., L.S.
PROJECT NUMBER | OCA NUMBER | DATE 12/2011
CITY ENGINEER'S OFFICE
CITY HALL - SEVENTH FLOOR
455 NORTH MAIN STREET
WICHITA, KANSAS 67202-1620
(316) 268-4501
SHEET _ of _

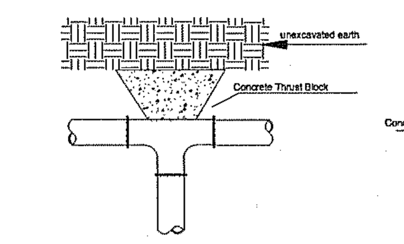

TEE

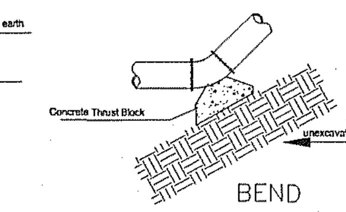

BEND

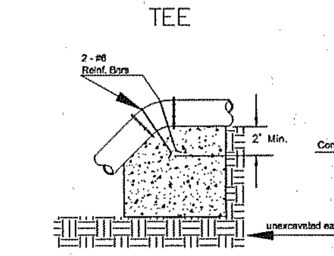

VERTICAL BEND

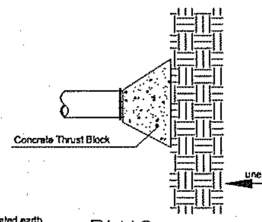

PLUG

PIPE SIZE	THRUST AT FITTINGS IN TONS AT 150#/IN ^{2}					
	PLUG	90°	45°	22 1/2°	11 1/4°	TEE
6"	2.8	3.95	2.15	[illegible]	.55	2.8
8"	4.9	6.95	3.75	1.90	.96	4.9
12"	11.4	16.1	8.75	4.45	2.25	11.4
16"	20.15	28.5	15.4	7.85	3.95	20.15
20"	31.15	44.0	23.65	12.15	6.10	31.15
24"	44.55	63.0	34.1	17.4	8.75	44.55

TYPICAL THRUST BLOCKS

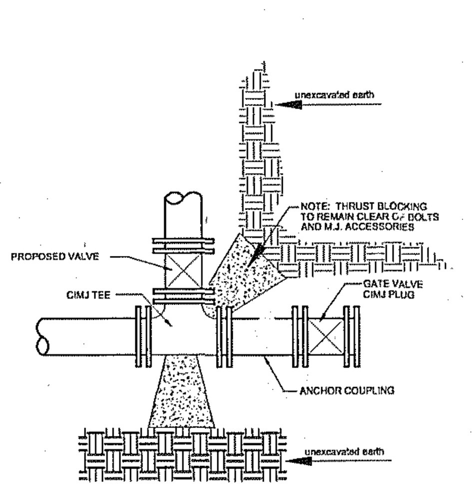

KEY BLOCK DETAIL

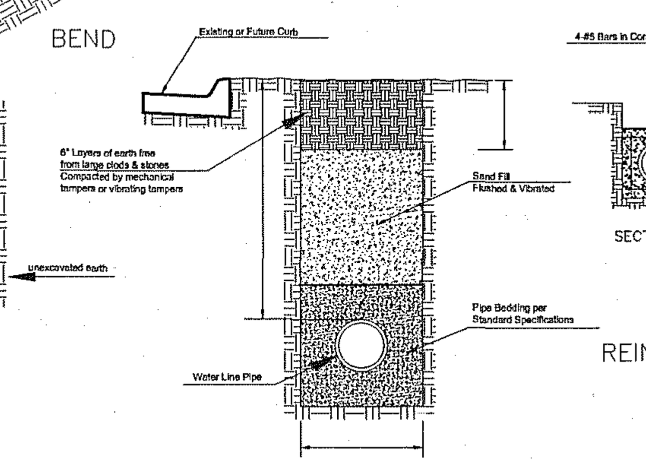

TRENCH COMPACTION IN ROAD RIGHT–OF–WAY

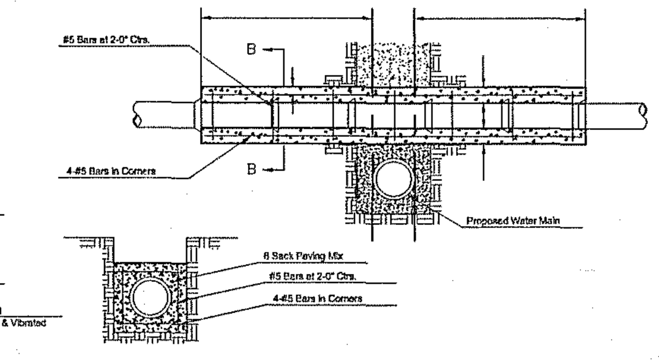

Note: Encasement to begin and end at a Bell on Sanitary Sewer Pipe.

REINFORCED CONCRETE ENCASEMENT OF SANITARY SEWER

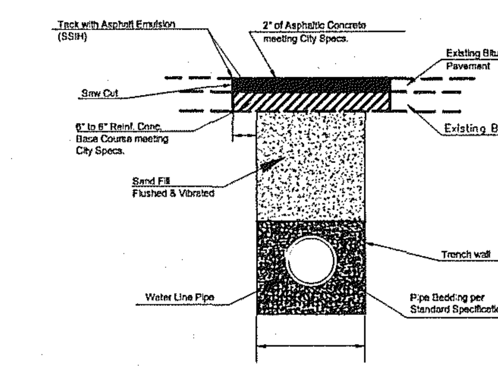

PAVEMENT REPLACEMENT & TRENCH COMPACTION UNDER EXISTING AND PROPOSED CITY ROADS UNLESS OTHERWISE NOTED ON PLANS

MISCELLANEOUS WATER DETAILS
CITY OF WICHITA
PUBLIC WORKS & UTILITIES ENGINEERING DIVISION
CITY ENGINEER: JAMES L. ARMOUR, P.E., L.S.
PROJECT NUMBER | OCA NUMBER | DATE 01/2012
CITY ENGINEER'S OFFICE
CITY HALL - SEVENTH FLOOR
455 NORTH MAIN STREET
WICHITA, KANSAS 67202-1620
(316) 268-4501
SHEET _ of _

NOTE
Underground utilities and structures have been plotted from available information and therefore, their location must be considered approximate only. It is the responsibility of the individual contractors to notify the utility companies before actual construction.

CVS pharmacy

NORTHERN 13,600 LEFT SIDE DRIVE-THRU

STORE NUMBER: 10159

NWC 21ST ST AND AMIDON AVE
WICHITA, KS
PROJECT TYPE: NEW CONSTRUCTION
DEAL TYPE: Fee for Service/GL/Type B

CS PROJECT NUMBER: 064720

ARCHITECT OF RECORD

NORR
ARCHITECTS ENGINEERS PLANNERS

CONSULTANT:
PREMIER CIVIL ENGINEERING
308 TCW Court
Lake Saint Louis, MO 63367
Phone: (314) 925-7444 Fax: (314) 925-7457

DEVELOPER:
VELMEIR COMPANIES

ENGINEERS AUTHENTICATION
The responsibility for professional engineering liability on this project is hereby limited to the set of plans authenticated by the seal, signature, and date hereunder attached. Responsibility is disclaimed for all other engineering plans involved in this project and specifically excludes revisions after this date unless reauthenticated.

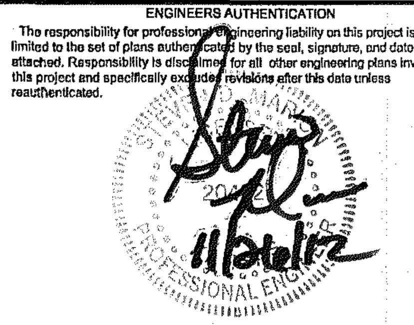

STEVE MARION P.E.
ENGINEER
PE2006007195

REVISIONS:

DRAWING BY: J.WURM
DATE: 09-06-12
JOB NUMBER: 113301
TITLE:

UTILITY DETAILS

SHEET NUMBER:

SHEET C-9.1

COMMENTS:
NOT APPROVED FOR CONSTRUCTION