STATE	PROJECT NO.	YEAR	SHEET NO.	TOTAL SHEETS
KANSAS	472-85066	2014	66	388

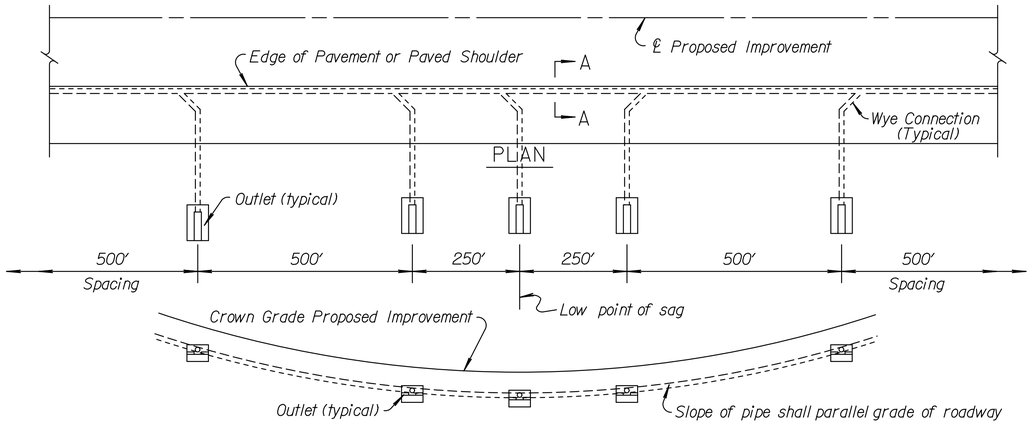

Note: Standard outlet spacing is 500' and reduced to 250' at vertical sag locations. When the profile grade is less than 0.35% or when the surface of the pavement is sloped one direction such as at superelevated sections, the outlet spacing is 200'. No edge drains or outlets are required on the high side of pavement sloped one direction.

Note: Edge drains shown at edge of driving lane. See Sections below for location for various surface/shoulder treatments.

PROFILE

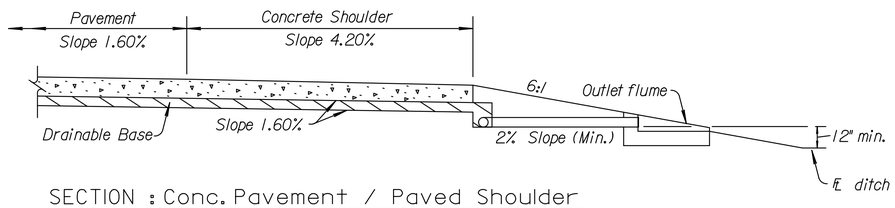

SECTION : Conc. Pavement / Paved Shoulder

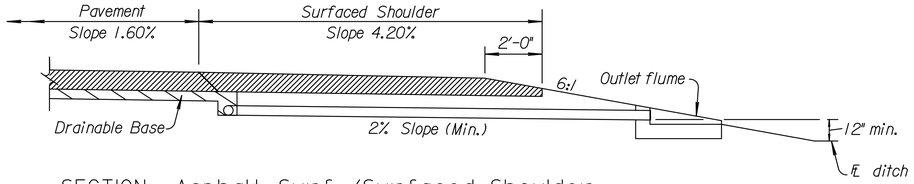

SECTION : Asphalt Surf. /Surfaced Shoulder

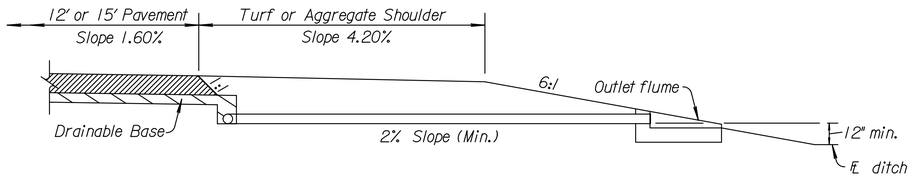

SECTION : Asphalt Surf. /Non-Surf. Shoulder or Composite Shoulder

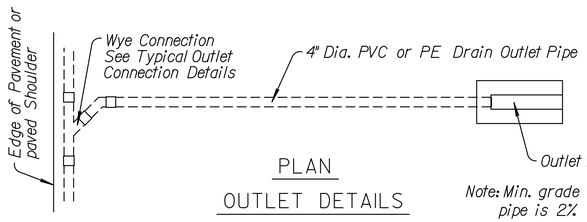

PLAN

OUTLET DETAILS

Note: Min. grade on outlet pipe is 2%.

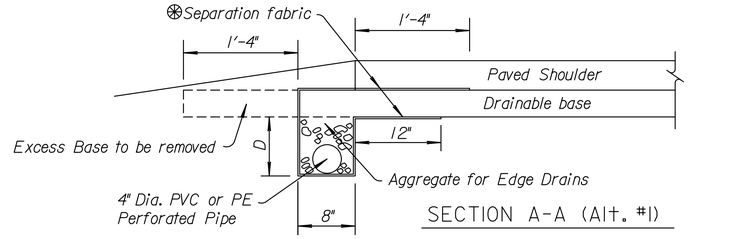

SECTION A-A (Alt. #1)

Note: Under no conditions shall the separation fabric be placed between the drainable base and the edge drain aggregate.

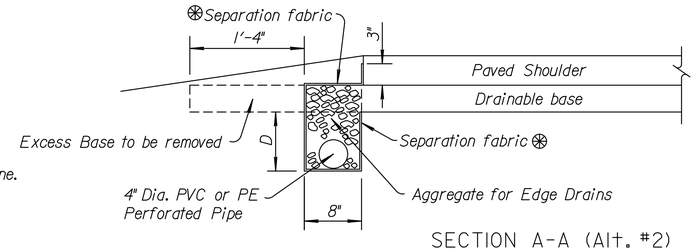

SECTION A-A (Alt. #2)

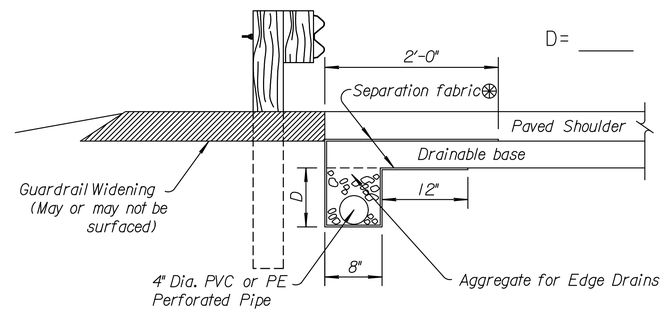

Note: Edge drain shall be located beneath the shoulder as shown where guardrail is adjacent to the edge of the shoulder. Transition to normal location when guardrail flare is sufficient to allow approximately 1'-3" between the face of the post and the drain trench.

SECTION A-A (At Guardrail)

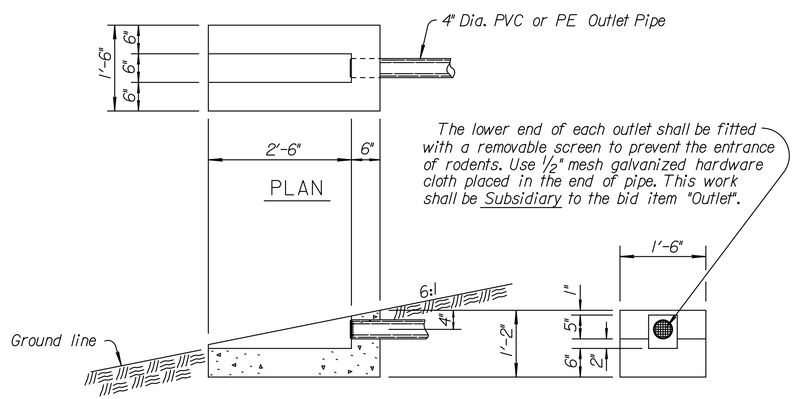

OUTLET FLUME DETAILS

GENERAL NOTE

The outlet flume shall be constructed at the end of all outlet pipes and shall be Concrete Grade 3.0 (f'c ≥ 3000 psi) or Commercial Grade Concrete. At the Contractors option, Concrete Grade 3.0 (AE) may be used.

The Contractor has the option of constructing the outlet flume in the field or installing a precast concrete flume. If a precast flume is used, its shape and dimensions shall conform to those indicated on this sheet. Minor variations may be permitted with the approval of the Engineer. For precast flumes use Concrete Grade 3.0 (AE).

The outlet flume, rodent screen, all outlet pipe and fittings shall be considered subsidiary to the bid item "Edge Drain Outlet".

Separation fabric shall be placed full width on non-treated subgrade. Otherwise place fabric as shown on Section A-A.

Locations for edge drain outlets as shown on the plans are approximate. Exact locations shall be determined at the time of construction by the Engineer. Prior to installation all edge drain outlets shall be field verified by the Engineer to determine if minimum slope criteria and clearance are being met. If it is determined that minimum slope and clearance criteria are not being met, regrading of the ditch and/or relocation of the outlet may be required. Similarly, the Engineer may relocate outlets to tie into existing or newly constructed drainage structures if feasible. Any regrading of the ditch shall be accomplished in a manner which does not affect the foreslope within the project clear zone.

In rock cuts and fills the edge drain may be underrun. The Engineer and Regional Geologist will determine the locations and extent to be shown on the plans. The locations shall be field verified by the Engineer and Regional Geologist prior to installation. If locations are not shown on the plans the locations shall be determined at the time of construction by the Engineer and Regional Geologist.

The edge drain outlet connection will be the wye connection except where shown on RD655 and when the outlet drops into an existing drainage structure.

See Std. Drawing RD655 for typical outlet connection details.

The edge drain outlet flume shall be marked by a 1'-0" x 3" paint or tape stripe perpindicular to the roadway centerline, placed at the outside edge of the paved shoulder or at the pavement edge for projects without paved shoulders. The stripe shall be white on bituminous surfacing or black on concrete pavement. All work and materials required to place this stripe shall be Subsidiary to the bid item "Edge Drains".

EDGE DRAIN OUTLETS					
STATION	SIDE	STATION	SIDE	STATION	SIDE
(See	Summary	of	Quantities)		

NO.	DATE	REVISIONS	BY	APP'D
8	1-10-07	Changed bituminous to asphalt	S.W.K.	J.O.B.
7	1-20-05	Rev. slopes, concrete grade & notes	S.W.K.	J.O.B.
6	1-11-00	Revised Alt. 2 aggregate	R.J.S.	J.O.B.
5	10-13-99	Rev. details, add Alt. 2, add stripe	R.J.S.	J.O.B.

KANSAS DEPARTMENT OF TRANSPORTATION

EDGE DRAINS

~~RD654~~

FHWA APPROVAL	06-10-05	APP'D. James O. Brewer	
DESIGNED	DETAILED	QUANTITIES	TRACED Bowser
DESIGN CK.	DETAIL CK.	QUAN.CK.	TRACE CK. Seitz

Sh. No. 66

Note: Details on this sheet are for an aggregate/pipe edge drain. If prefabricated edge drains are specified installation shall be in accordance with the manufacturer's recommendations, but at the same depth and location shown on this sheet.

Drawn By : cp
File : I:\2009\09521\Standards\09521-rd654.dgn
Plotted : 30-DEC-2013 13:34