FHWA REG NO.	STATE	PROJECT NO.	YEAR	SHEET NO.	SHEETS
7	KANSAS	54-87 K-4445-01	1996	17	73

LEGEND

SCALE: 1" = 20' HORIZ.
1" = 5' VERT.

- = PAVEMENT TO BE REMOVED
- S.C. = SAW CUT (FULL DEPTH)
- = ASPHALTIC CONCRETE PAVEMENT
- (98) = HORIZONTAL ALIGNMENT CONTROL

WATER AND GAS SERVICE LINES WILL BE ADJUSTED BY THE UTILITIES DURING STORM SEWER CONSTRUCTION.

(B 2)
STA. 98+79.88, BASELINE
CONST. REINF. CONC. MANHOLE
10-FT. SOUTH OF CENTER OF PROPOSED CUL-DE-SAC
W = 7'-6", L = 7'-6"
TOP = 1354.08, SEE SHEET 30.
N 1683339.1917
E 1663774.8168

STA. 99+87.58, BASELINE=
KELLOGG ℄ STA. 126+27.00, OFFSET 33.21' RT.
END 54" PIPE
INSTALL TEMPORARY WOODEN PIPE PLUG
(SUBSIDIARY)
N 1683444.1165
E 1663770.8432

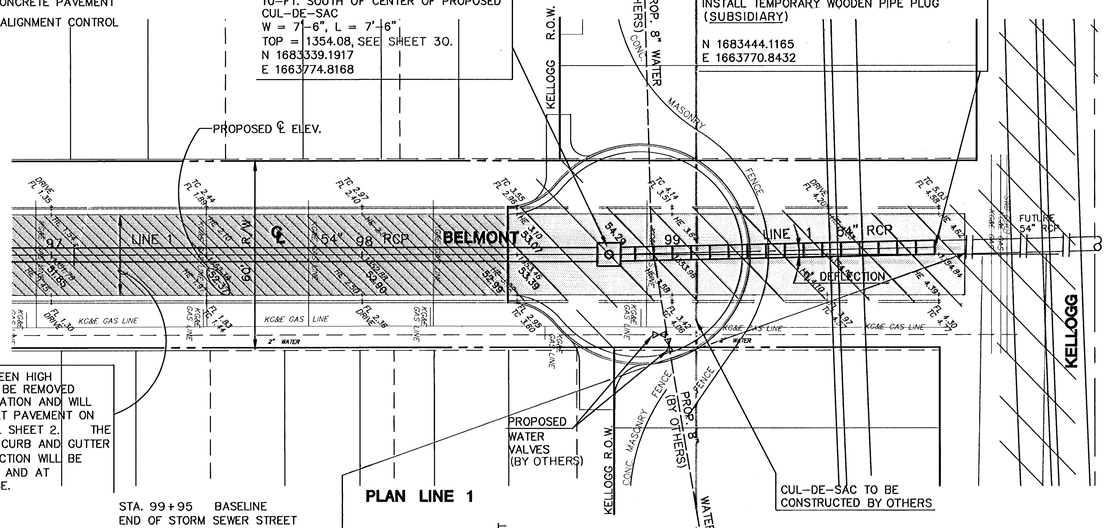

CONCRETE PAVEMENT BETWEEN HIGH EDGE AND HIGH EDGE WILL BE REMOVED FOR STORM SEWER INSTALLATION AND WILL BE REPLACED WITH ASPHALT PAVEMENT ON A ROCK BASE. SEE DETAIL SHEET 2. THE REPLACEMENT OF EXISTING CURB AND GUTTER DAMAGED DURING CONSTRUCTION WILL BE REPLACED BY CONTRACTOR AND AT THE CONTRACTOR'S EXPENSE.

STA. 99+95 BASELINE
END OF STORM SEWER STREET REPLACEMENT (PERMANENT).

PLAN LINE 1

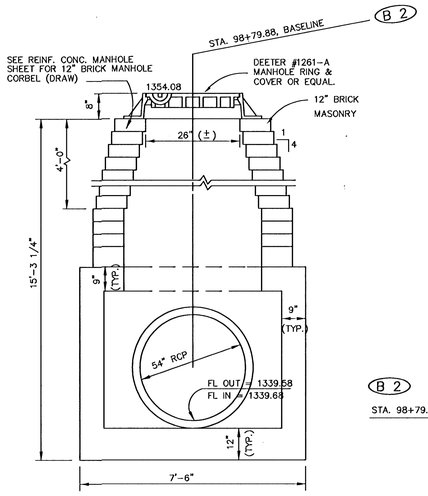

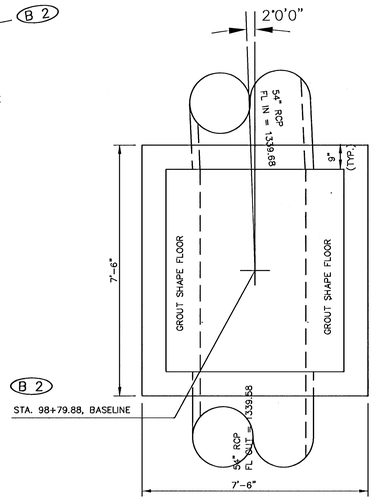

PROFILE LINE 1

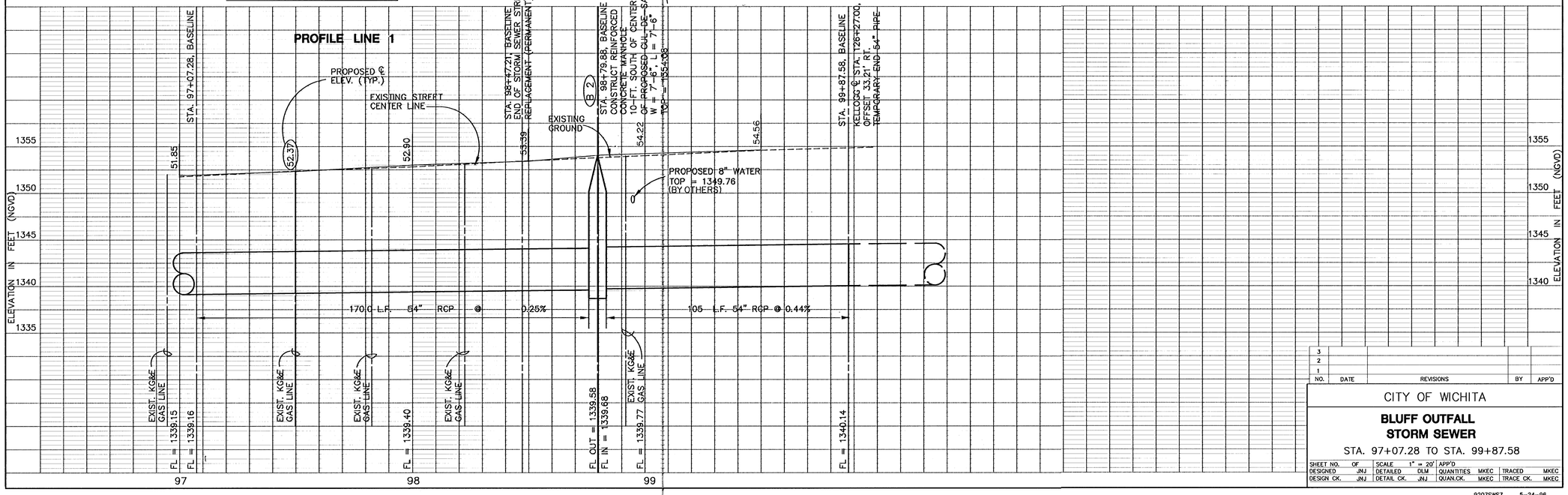

NO.	DATE	REVISIONS	BY	APP'D
3				
2				
1				

CITY OF WICHITA

BLUFF OUTFALL STORM SEWER

STA. 97+07.28 TO STA. 99+87.58

SHEET NO.	OF	SCALE	1" = 20'	APP'D			
DESIGNED	JNJ	DETAILED	DLM	QUANTITIES	MKEC	TRACED	MKEC
DESIGN CK.	JNJ	DETAIL CK.	JNJ	QUAN.CK.	MKEC	TRACE CK.	MKEC

9207SWS7 5-24-96