FHWA REGION NO.	STATE	PROJECT NO.	YEAR	SHEET NO.	TOTAL SHEETS
7	KANSAS	54-87 K-4445-01	1996	27	73

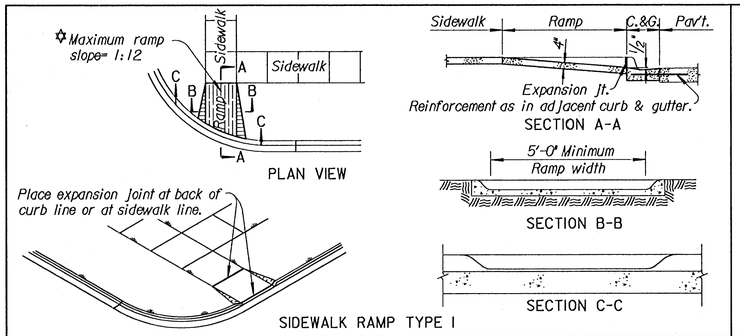

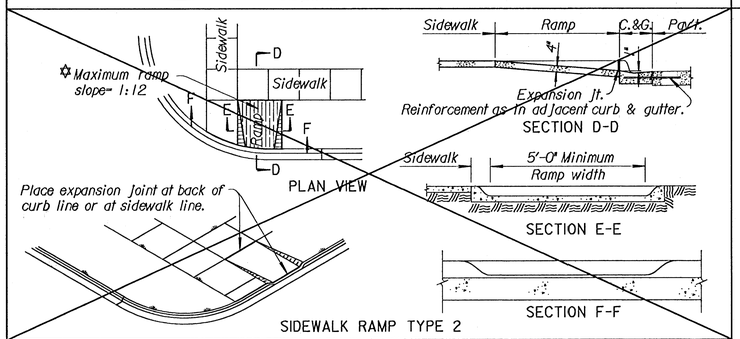

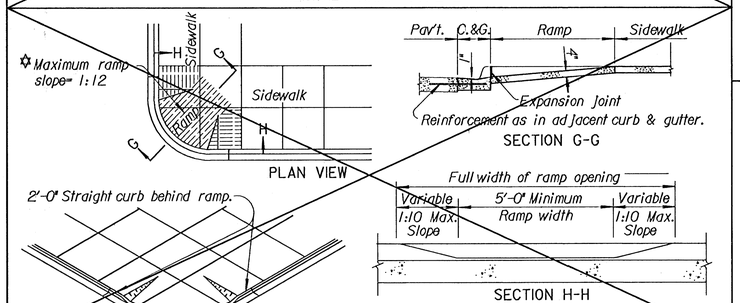

Note:
Reinforcing bars shown are to be used only when more than four steps are necessary.

Step formula:
"R" x "T" = not less than 70 nor more than 75.

The maximum "R" = 7 3/4"
The minimum "T" = 9"

Where field conditions permit, the steps should not be constructed too steep.

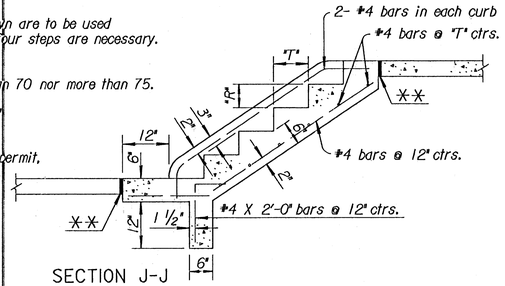

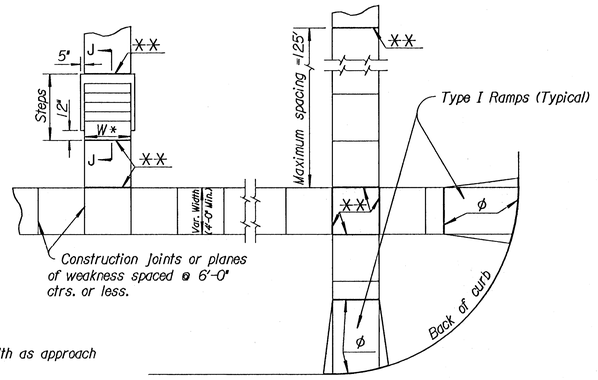

* "W" to be the same width as approach walk (4'-0" Min.).

** Expansion Joint (3/4" redwood board).

ϕ Expansion Joint (3/4" redwood board) placed at either back of curb line or at sidewalk line.

NOTES:

Details shown on this plan apply to all construction or reconstruction of streets, curbs or sidewalks.

Curb cut ramps are to be located as shown on the plans or as directed by the Engineer.

Ramps shall be provided at all corners of street intersections where there are existing or proposed sidewalks and curb. Ramps shall also be provided at walk locations in mid-block in the vicinities of hospitals, medical centers and athletic stadiums.

Sidewalk ramps shall be grooved in accordance with details below.

Sidewalks shall be ramped where the driveway curb is extended across the walk.

Care shall be taken to ensure a uniform grade on the ramp, free of sags and short grade changes.

If possible, drainage structures should not be placed in line with ramps. Except where existing drainage structures are being utilized in the new construction, location of the ramp should take precedence over the location of the drainage structure.

Use of the sidewalk ramp Type 2 shall be restricted to locations where it is not feasible to use Types 1 or 3.

The normal gutter line profile shall be maintained through th area of the ramp.

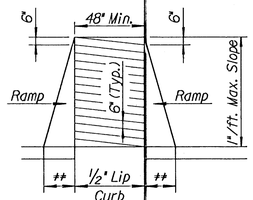

++ 12" to 18"

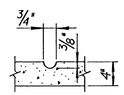

SIDEWALK RAMP DETAILS

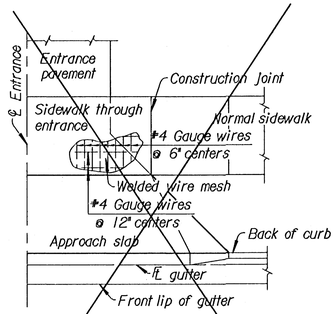

See Std. No. 726.1 for details of Alley and Entrance Pavement.

REINFORCEMENT DIAGRAM
SIDEWALK THROUGH ENTRANCE

NOTES:

Expansion joints shall be placed in sidewalks as follows: In long runs, expansion joints shall be 3/4" redwood boards flush with the surface, at a maximum spacing of 25'. This same joint should be used at sidewalk junctions as shown in Typical Plan.

Where the end of the sidewalk abuts a curb, a 3/4" redwood board flush with the surface shall be used.

Where the sidewalk is parallel and adjacent to a rigid structure, a 1/2" premoulded joint filler (Nonextruding, Type B) shall be used.

Sidewalk shall slope toward the street at the rate of 1/4" per foot, and where necessary, may be depressed or sloped to fit alleys and entrances as shown on the plans or as directed by the Engineer.

Where the plans do not require air entrainment for sidewalk, at the contractors option Class A Concrete (AE) may be used throughout, but payment will be made as square yards of Sidewalk Construction.

At the contractors option Class A Concrete (AE) may be used throughout for construction of steps, but payment will be made as square yards of Sidewalk Construction.

At the contractors option Class A Concrete (AE) may be used throughout for construction of sidewalk ramps, but payment will be made as square yards of Sidewalk Construction.

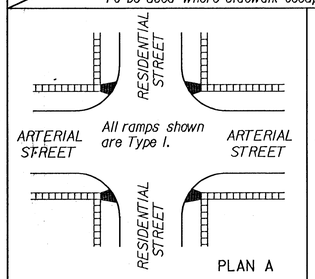

Heavy Traffic on Arterial
No Traffic Signal

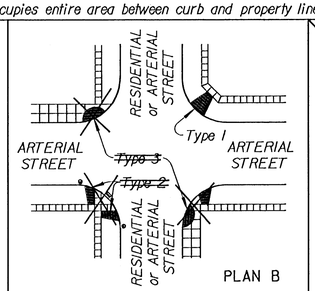

Signalized Intersection
Typical Ramp Treatments

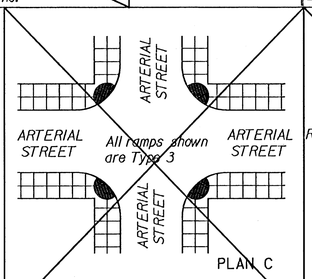

Traffic Control on Both Streets
Wide Sidewalks

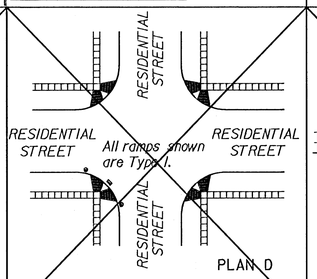

Normal Treatment in Residential Area

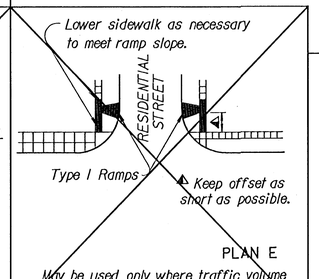

May be used only where traffic volume is low and where other features make Plan D impractical.

LEGEND

- Sidewalk Ramp Type 1
- Sidewalk Ramp Type 2
- Sidewalk Ramp Type 3
- Preferred location of drainage inlet (Typical)
- Alternate location of drainage inlet (Typical)
- Sidewalk

NO.	DATE	REVISIONS	BY	APP'D
3				
2	10-24-91	Revised maximum ramp slopes	R.J.S.	J.O.B.
1	9-2-88	5' Min. sidewalk width, ent. on CADD	R.J.S.	J.O.B.

KANSAS DEPARTMENT OF TRANSPORTATION

SIDEWALK & STEPS

~~STD.NO. 725~~

FHWA APPROVAL 1-22-92 APP'D JAMES O. BREWER

DESIGNED	DETAILED	QUANTITIES	TRACED BOWSER
DESIGN CK.	DETAIL CK.	QUAN.CK.	TRACE CK. SEITZ

Design Filename: k:\5580\phase\sidewalk\sidwrmp\sdwrmp725.dgn
Plotted on: 25-JUL-1996
Plot Scale: 1.000000x1.000000
Pen Table: k:\5580\phase\pentable\kdotmrd.pen
Setup Name: NONE
Level: ALL