FHWA REGION NO.	STATE	PROJECT NO.	YEAR	SHEET NO.	TOTAL SHEETS
7	KANSAS	54–87 K4445–01	1996	46	73

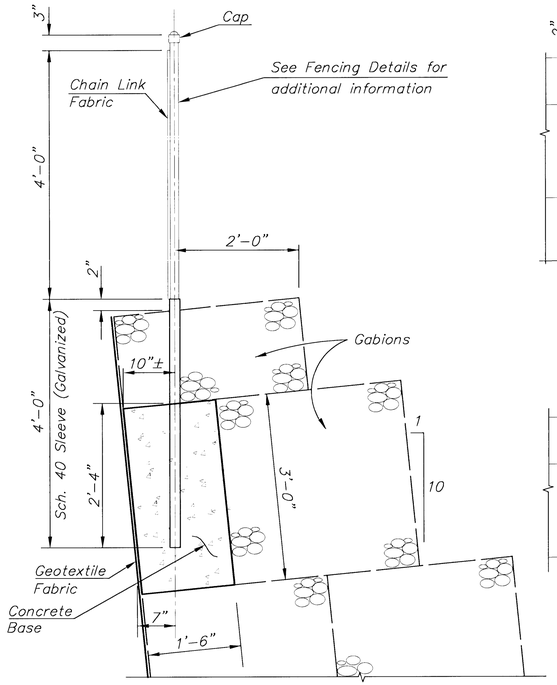

TYPICAL SECTION

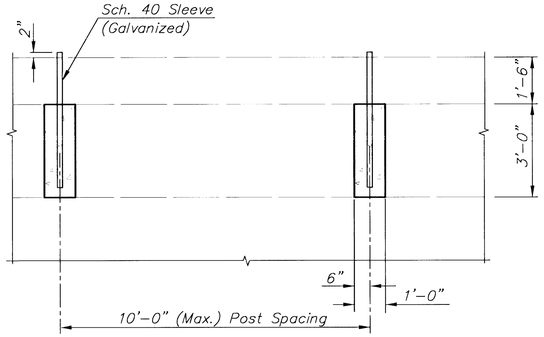

ELEVATION

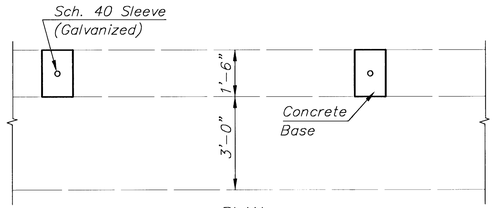

PLAN

NOTE: See Std. No. 670A & 670B for post spacing and diameter and Spacing Specifications for additional information and requirements.

GABION MOUNTED FENCE POST

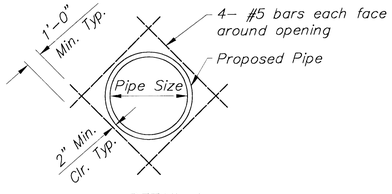

DETAIL A

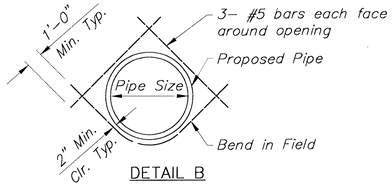

DETAIL B

R.F.B. WALL OPENING DETAILS FOR PIPES

Diagonal reinforcing shall be added as shown in Detail "A" or "B" depending upon the pipe location in the R.F.B. wall. The reinforcing shall be bent as required to maintain 2" clearance to the concrete face. This reinforcing shall not be paid for directly but shall be subsidiary to "Reinforcing Steel (Gr. 60)".

The R.F.B. reinforcing shall be cut or bent to provide 2" clearance to the opening. No deduction in the reinforcing steel or concrete quantities has been made for the pipe openings.

NOTE: 1. The inlet type 1A concrete top shall be constructed to support the loading as noted for the R.F.B.

2. R.C.B. reinforcing shall be cut or bent to provide 2" clearance to the opening. No deduction in the reinforcing steel or concrete quantities has been made for the inlet openings.

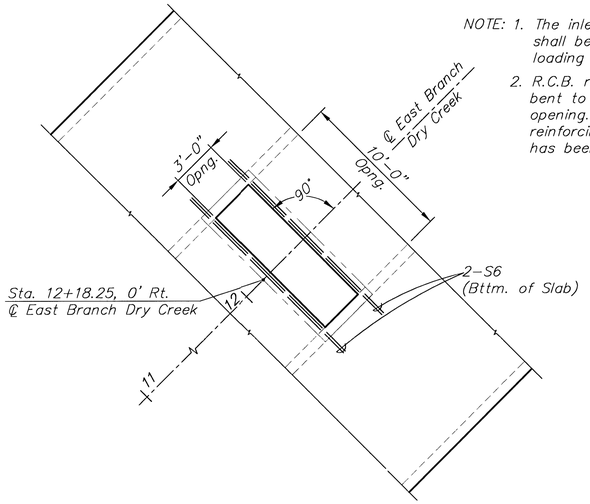

CURB INLET OPENING DETAIL
STA. 57+50.28 (Pinecrest)

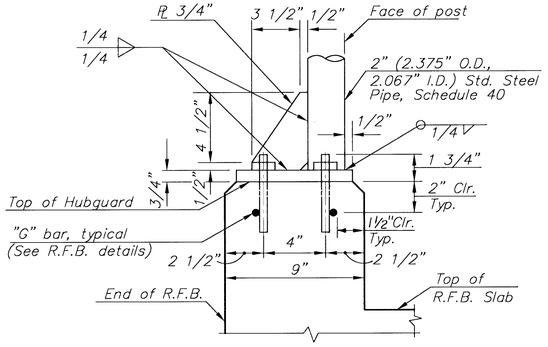

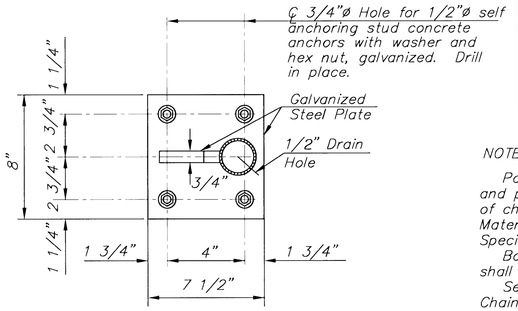

BASE PLATE DETAILS FOR POSTS ON R.F.B. HUBGUARDS

NOTES:

Posts and base plates shall be galvanized after the posts and plates are welded. No. 7 Gauge tension wire at bottom of chain link fabric shall be 1" above top of hubguard. Materials shall conform to section 1600 of the Standard Specifications.

Base plates, anchor bolts, on R.F.B. hubguards shall be subsidiary to fence items.

See standard fence details sheet 50 and 51 for additional Chain Link Fence details.

All posts for fence installations on R.F.B. structures shall be 2" (2.375" O.D., 2.067 I.D.) Standard Steel Pipe Schedule 40, ASTM A53.

The stud concrete anchors shall be galvanized and have a minimum pullout strength of 8,000 pounds based on 4,000 psi concrete. Length of embedment into concrete shall conform to manufacturer's recomendations.

NO.	DATE	REVISIONS	BY	APP'D

CITY OF WICHITA

MISCELLANEOUS DETAILS

FHWA APPROVAL			APP'D	
DESIGNED MDK	DETAILED DPR, KLH		QUANTITIES	TRACED
DESIGN CK. KJS	DETAIL CK. MDK		QUAN.CK.	TRACE CK.

KOMISC

ORIG. FROM:	BR. NO.	PROJ.	CO.
DESIGN	DESIGN		CHECK
DETAIL	DATE	DATE	DATE
QUANTITIES	DATE	DATE	DATE
TRACING	DATE	DATE	DATE
RETRACED	DATE	DATE	DATE