FHWA REGION NO.	STATE	PROJECT NO.	YEAR	SHEET NO.	TOTAL SHEETS
7	KANSAS	54-87 K-4445-01	1996	50	73

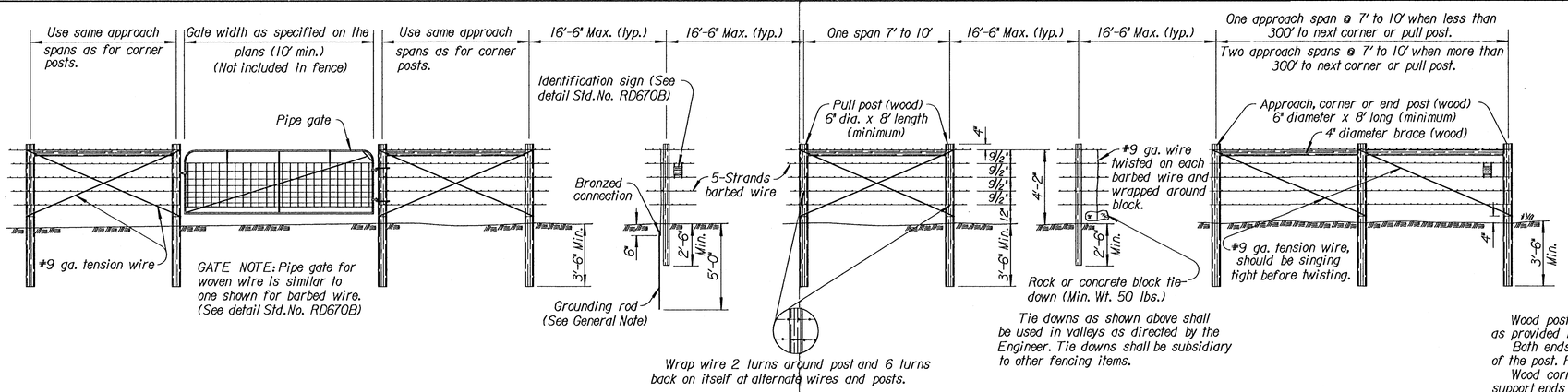

BARBED WIRE FENCE

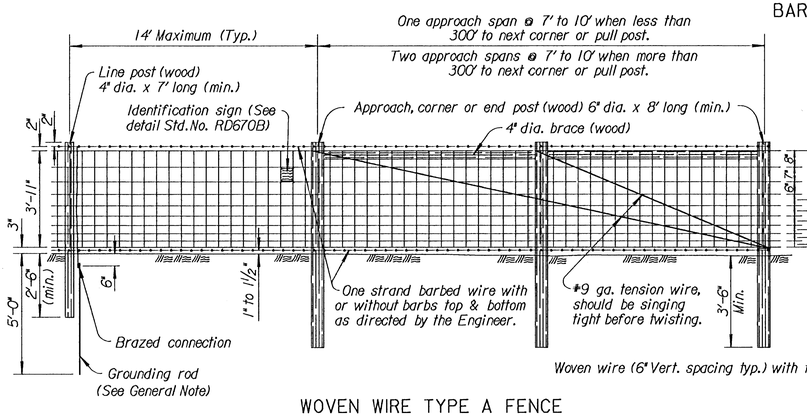

WOVEN WIRE TYPE A FENCE

Pull post assembly for woven wire with wood posts shall be similar to barbed wire pull post assembly detail.

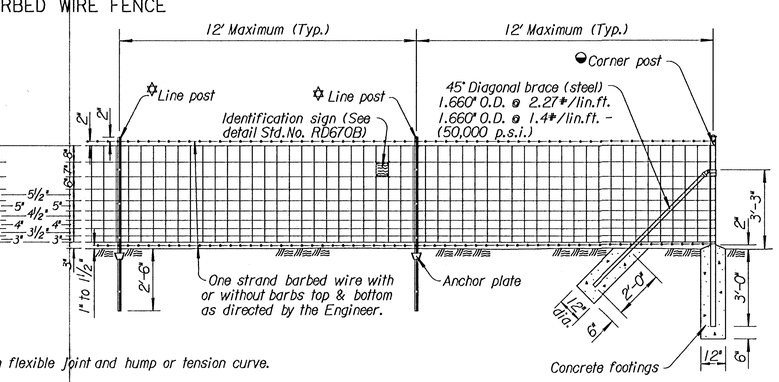

Woven wire (6" Vert. spacing typ.) with flexible joint and hump or tension curve.

WOVEN WIRE TYPE B FENCE

(STEEL)

◒ End, Corner, or Pull Post 7'-6" length 2.875" O.D. (5.79#/lin. ft.) pipe or 7'-6" length 2.875" O.D. (4.64#/lin. ft.) (50,000 p.s.i.)

✡ Steel line post 7'-0" length
Studded T (1.33#/lin. ft.)
U (1.33#/lin. ft.)
H (2.27#/lin. ft.)
1¾" Oval back I beam (2.43#/lin. ft.)

◆ Brace
(A120) 1.660" O.D., 0.083" Th. (1.40#/lin. ft.) (50,000 p.s.i.) pipe or 1.660" O.D., 0.140" Th. (2.27#/lin. ft.) pipe or 1¾" Oval Back I-Beam (2.45#/lin. ft.) or 1⅞"x1¾" Brace rail (See Alt. Details)

✱ Line post 7'-0" length.
2.375" O.D., 0.154" Th. (3.65#/lin. ft.) pipe or 2.375" O.D., 0.130" Th. (3.121#/lin. ft.) pipe (50,000 p.s.i.) or 2¼" Oval Back I-Beam (3.65#/lin. ft.) or 3½"x3½" Type II (4.85#/lin. ft.)

▲ End, corner, gate, or pull post 7'-6" length.
(A120) 2.875" O.D., 0.203" Th. (5.79#/lin. ft.) pipe or 2.875" O.D., 0.160" Th. (4.64#/lin.ft.) (50,000 p.s.i.) pipe or 1¾" Oval Back I-Beam (2.43#/lin. ft.) or 1⅝"x1⅞" C Post (2.28#/lin. ft.) or H Post (2.6#/lin.ft. min.)

GENERAL NOTE

Wood posts and braces shall be given a preservative treatment as provided in the K.D.O.T. Standard Specifications.

Both ends of all wood posts shall be cut normal to the axis of the post. Pointed posts will not be permitted.

Wood corner, end, pull and approach posts shall be notched to support ends of wood braces. Wood braces shall be toenailed to the posts with 2-10d nails in each end of the brace.

When wood posts are used, both ends of all tension wires shall be wrapped around the posts twice and stapled in place.

When wood posts are used the fence shall be grounded by a ⅝" diameter galvanized or copper coated rod five feet long, driven vertically until the top is six inches below the ground surface. A #6 solid copper conductor shall be securely fastened to each element of the fence by use of clamps or other suitable device. Grounding rod shall be installed at intervals of 175' maximum.

In lieu of using the galvanized or copper coated rod as described above the contractor may, at his option, use a steel line post at intervals not to exceed each eighth post.

The galvanized or copper coated rod shall be used where power lines pass over the fence.

All steel posts, braces, fittings, and gate frames shall be galvanized and/or coated in accordance with KDOT Standard Spec.

Steel posts shall be provided with fasteners to prevent slippage of the wire strands.

Outside diameters shown for tubular steel posts, bracing and gate frames are nominal. Weight tolerances shall be as shown in the K.D.O.T. Standard Specifications.

Posts may be set by driving or digging. If by digging, the posts shall be set in the center of the hole and the soil tamped securely on all sides.

Pull post assembly shall be used at sharp breaks in vertical grade or at approximately 330' centers (Woven & Chain link) or 1320' centers (Barbed wire) on straight runs or as directed by the Engineer.

Concrete used in fence installation shall conform to the requirements of the K.D.O.T. Standard Specifications.

Woven wire, chain link fabric, barbed wire and tension wire shall be either zinc coated (galvanized) or aluminum coated.

Minimum strength of barbed wire and tension wire shall be as provided in the K.D.O.T. Standard Specifications.

Use #9 gauge galvanized staples 1½" to 1¾" long, or #9 gauge galvanized Ring-shank staples 1½" to 1¾" long.

Alternate gate designs may be submitted for approval. Lighter weight materials will not be approved.

Padlocks for gates shall be furnished by the State.

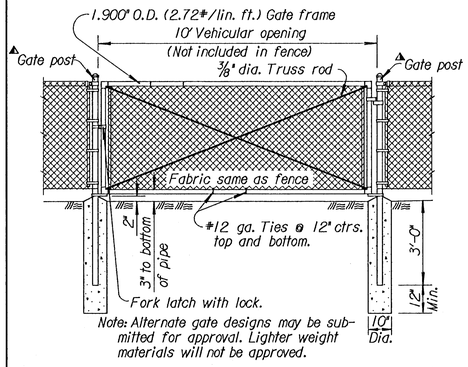

DETAIL of GATE, HINGE & SPECIFICATIONS

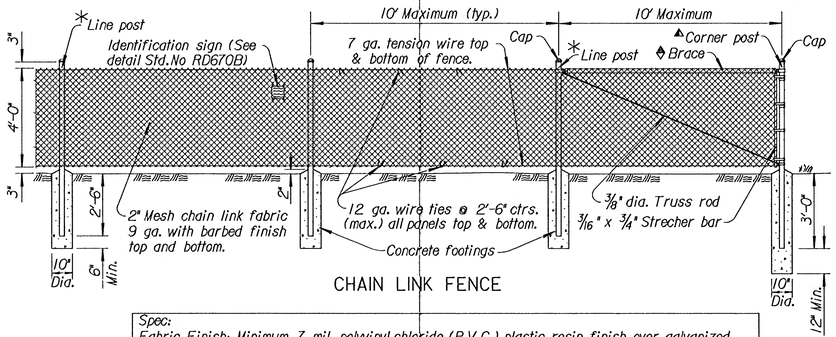

CHAIN LINK FENCE

Spec:
Fabric Finish: Minimum 7 mil. polyvinyl chloride (P.V.C.) plastic resin finish over galvanized #9 Gage steel wire. Color shall be black. All post and related hardware to install 4' Chain Link Fence shall be finished with polyvinyl chloride (P.V.C.) plastic resin according to manufacture's recommendations. Color shall be black. The P.V.C. plastic coating shall be applied to the galvanized steel wire, all post and related hardware, by the thermal bonding method.

NO.	DATE	REVISIONS	BY	APP'D
3	10-19-94	Revised notes on galvanization	R.J.S.	J.O.B.
2	3-24-93	Added tie-down location note	R.J.S.	J.O.B.
1	10-28-92	Added barbed wire pull post distance	R.J.S.	J.O.B.

KANSAS DEPARTMENT OF TRANSPORTATION

HIGHWAY FENCE BARBED, WOVEN, & CHAIN LINK

~~RD670A~~

FHWA APPROVAL	11-3-94	APP'D. James O. Brewer			
DESIGNED		DETAILED	QUANTITIES	TRACED	B.N.B.
DESIGN CK.		DETAIL CK.	QUAN.CK.	TRACE CK.	R.J.S.

Design Filename: h:\bi590\phase4\kdotsrd\rd670a.dgn
Plotted on 03-JUL-1996 Settings File: NONE
Plot Scale: 5.000000x.000000
Pen Table: h:\bi590\phase4\pentable\kdotsrd.pen
lbarris