FHWA REGION NO.	STATE	PROJECT NUMBER	FISCAL YEAR	SHEET NUMBER	TOTAL SHEETS
7	KANSAS	87TE-0115-01	1997	37	49

BICYCLE TRAFFIC CONTROL SIGNS & SIGN POSTS

STATION	LOCATION FROM ℄	W5-4	OM-2	W1-2R	W1-2L	W3-1	W1-5L	W1-5R	R1-1	D11-1	M7-1R	M7-1L	M7-4	W1-1L	SIGN POST LENGTH: BREAKAWAY LENGTH 45 mm X 45 mm X VARIES	SIGN POST LENGTH: "U" CHANNEL
8+485	RT.									1					2 500	
8+487.983	LT.	1													2 500	
8+522	RT.		1												.	1 600
8+530	LT.		1												.	1 600
8+599	RT.		1												.	1 600
8+612	LT.		1												.	1 600
8+700	RT.			1											2 500	
8+720	RT.		1													1 600
8+728	LT.		1													1 600
8+770	LT.				1										2 500	
9+085	RT.		1												.	1 600
9+095.500	LT.		1												.	1 600
9+356	RT.		1													1 600
9+365	LT.		1													1 600
9+708.500	R.T		1													1 600
9+718.500	LT.		1													1 600
9+957.978	RT.					1									2 500	
10+010	RT.								1						2 500	
10+030.500	RT.									1		1			2 500	
10+030.257	LT.								1						2 500	
10+031	7 500 LT.									1	1				2 500	
10+070.629	RT.		1													1 600
10+071.190	RT.									1			1		2 500	
10+082.629	LT.													1	2 500	
10+111.629	LT.		1													1 600
10+121.629	RT.		1													1 600
10+146.629	2 800 LT.						1								2 500	
10+263.552	RT.							1							2 500	
10+672	RT.		1													1 600
10+683	LT.		1													1 600
10+984	RT.		1													1 600
10+997	LT.		1													1 600
11+200	RT.						1								2 500	
11+320	LT.			1											2 500	
11+455	RT.			1											2 500	
11+467	RT.		1													1 600
11+478	LT.		1													1 600
11+490	LT.			1											2 500	
11+530	RT.						1								2 500	
11+600.452	RT.						1								2 500	
11+649.465	RT.								1						2 500	
11+668.723	LT.								1						2 500	
11+833.360	RT.									1					2 500	
12+403	RT.									1		1			2 500	
12+404	LT.									1	1				2 500	
.	.															
.	.															
TOTAL		1	21	4	1	1	4	1	4	7	2	2	1	1	24	21

VEHICLE TRAFFIC CONTROL SIGNS & SIGN POSTS

STATION	LOCATION FROM ℄	W11-2	W11-A2	R5-3	R7-9a	W16-1	R3-17	R8-3a	SIGN POST LENGTH: BREAKAWAY LENGTH 45 mm X 45 mm X VARIES	SIGN POST LENGTH: "U" CHANNEL
10+000	LT.			1					3 350	
10+011.500	68 600 LT.	1							3 350	
10+028.500	68 600 RT.	1							3 350	
10+011.500	3 000 LT.		1						3 350	
10+028.500	3 000 RT.		1						3 350	
11+244	RT.			1					3 350	
11+250	LT.				1				3 350	
11+280	LT.				1				3 350	
11+295	RT.			1					3 350	
11+652.500	6 200 LT.		1						3 350	
11+661.100	14 000 RT.		1						3 350	
11+742.130	16 000 RT.					1			3 350	
11+823.401	LT.						1		3 350	
11+823.401	LT.							1	3 350	
11+833.360	RT.			1					3 350	
TOTAL		2	4	4	2	1	1	1	15	

NOTE: ALL SIGN FACES TO CLEAR EDGE OF PAVED PATH BY 900mm EXCEPT OM-2 (600mm).

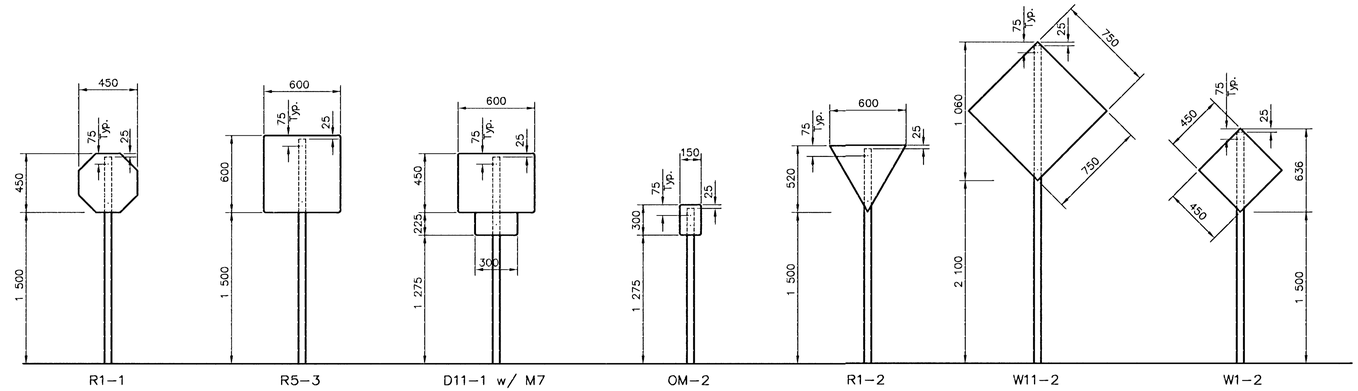

BIKE SIGN MOUNTING DETAILS

(SEE NOTE #5)

SIGN POST LENGTH SUMMARY

BREAKAWAY SIGN POST : 45 mm x 45 mm x VARIES

LENGTH	TOTAL # POSTS
60 mm x 60 mm x 450 mm	39
50 mm x 50 mm x 900 mm	39
45 mm x 45 mm x 2 500 mm	24
45 mm x 45 mm x 3 350 mm	15

U-CHANNEL

LENGTH	TOTAL # POSTS
STUBS 1 000 m	21
POSTS 1 600 m	21
STRAPS & BOLTS	21

PAVEMENT INSTALLATION SEQUENCE

1. SIGN POST ANCHOR DRIVEN INTO SUBGRADE PRIOR TO THE PLACEMENT OF THE PAVEMENT.
2. ANCHOR SLEEVE DRIVEN INTO SUBGRADE OVER THE SIGN POST ANCHOR PRIOR TO THE PLACEMENT OF THE PAVEMENT
3. INSERT SIGN POST INTO THE SIGN POST ANCHOR AND BOLT IN PLACE.

GROUND INSTALLATION SEQUENCE

1. SIGN POST ANCHOR DRIVEN INTO GROUND
2. ANCHOR SLEEVE DRIVEN INTO THE GROUND OVER THE SIGN POST ANCHOR.
3. INSERT SIGN POST INTO THE SIGN POST ANCHOR AND BOLT IN PLACE.

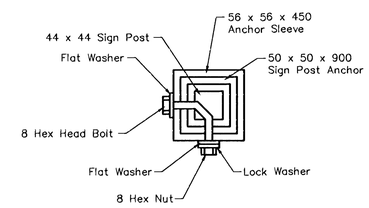

SECTION A-A

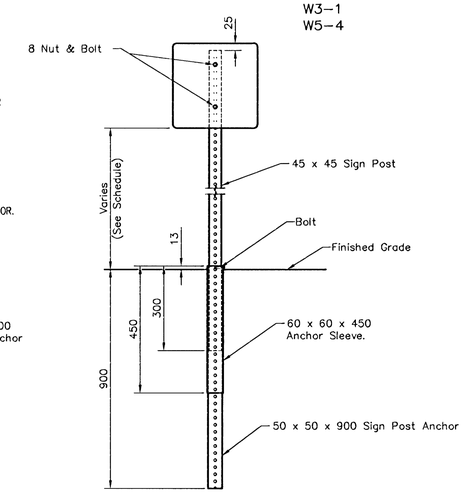

BREAK-AWAY SIGN POST DETAIL

SIGN DESCRIPTION

CLASS.	TYPE	PROCESS	SIZE	AREA
W5-4	BIKEWAY NARROWS	DIR. SCREEN	450 mm x 450 mm	0.20 Sq. M.
OM-2	TYPE 2 YELLOW OBJECT MARKER	DIR. SCREEN	150 mm x 300 mm	0.05 Sq. M.
W1-2R	CURVE	DIR. SCREEN	450 mm x 450 mm	0.20 Sq. M.
W1-2L	CURVE	DIR. SCREEN	450 mm x 450 mm	0.20 Sq. M.
W3-1	STOP AHEAD	DIR. SCREEN	450 mm x 450 mm	0.20 Sq. M.
W1-5L	CURVE	DIR. SCREEN	450 mm x 450 mm	0.20 Sq. M.
W1-5R	CURVE	DIR. SCREEN	450 mm x 450 mm	0.20 Sq. M.
R5-3	NO MOTOR VEHICLES	DIR. SCREEN	600 mm x 600 mm	0.36 Sq. M.
R1-1	STOP	REV. SCREEN	450 mm x 450 mm	0.20 Sq. M.
D11-1	BIKE ROUTE	REV. SCREEN	600 mm x 450 mm	0.27 Sq. M.
M7-1R	ARROW	REV. SCREEN	300 mm x 225 mm	0.07 Sq. M.
M7-1L	ARROW	REV. SCREEN	300 mm x 225 mm	0.07 Sq. M.
M7-5	ARROW	REV. SCREEN	300 mm x 225 mm	0.07 Sq. M.
M7-4	ARROW	REV. SCREEN	300 mm x 225 mm	0.07 Sq. M.
R1-2	YIELD	DIR. SCREEN	600 x 600 x 600	0.16 Sq. M.
W1-1L	CURVE	DIR. SCREEN	450 mm x 450 mm	0.20 Sq. M.
W11-2	PED. CROSSING	DIR. SCREEN	750 mm x 750 mm	0.56 Sq. M.
W11A-2	PED. CROSSING	DIR. SCREEN	750 mm x 750 mm	0.20 Sq. M.
R7-9a	NO PARKING - BIKE LANE	DIR. SCREEN	300 mm x 450 mm	0.14 Sq. M.
W16-1	SHARE THE ROADWAY	DIR. SCREEN	750 mm x 750 mm	0.56 Sq. M.
R3-17	RIGHT LANE BIKE ONLY	DIR. SCREEN	600 mm x 750 mm	0.45 Sq. M.
R8-3a	NO PARKING	DIR. SCREEN	600 mm x 600 mm	0.36 Sq. M.

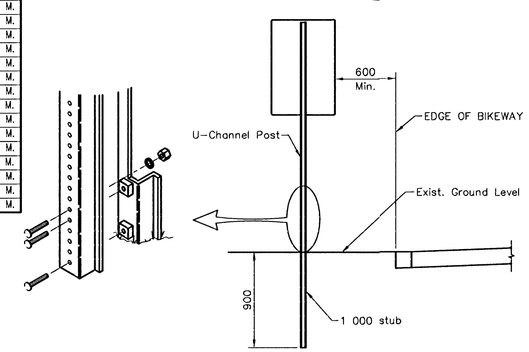

TRAFFIC SIGN INSTALLATION DETAIL

FOR SIGNS NOT GREATER THAN 300mm WIDE

NOTES:

1. IN ALL INSTALLATIONS THE FIRST HOLE ABOVE THE FINISHED GRADE LEVEL IN ALL THREE UNITS MUST BE IN LINE FOR INSERTION OF THE BOLT.
2. ALL BOLTS AND NUTS FOR FASTENING THE SIGNS AND SIGN POST ASSEMBLY SHALL COMPLY WITH SECTION 1614 AND ALL WASHERS SHALL COMPLY WITH SECTION 1614 OF THE STANDARD SPECIFICATIONS FOR STATE ROAD AND BRIDGE CONSTRUCTION (1980 EDITION) AND SHALL BE SUBSIDIARY ITEM.
3. ALL LETTER, NUMBER & SYBOL SIZES, SPACING & COLORS AND SIGN COLORS SHALL CONFORM TO THE CURRENT "MANUAL ON UNIFORM TRAFFIC CONTROL DEVICES."
4. ALL SIGN MATERIALS TO BE 0.080" ALUMINUM.
5. VEHICLE TRAFFIC CONTROL SIGN DIMENSIONS AND MOUNTING HEIGHT SHALL CONFORM TO THE CURRENT "MUTCD".

THE CITY OF WICHITA
CITY ENGINEER'S OFFICE
CITY HALL – SEVENTH FLOOR
455 NORTH MAIN STREET
WICHITA, KANSAS 67202
(316) 268-4501
(316) 268-4114 FAX

BIKE PATH SIGNING DETAILS AND QUANTITIES

M. E. LINDEBAK P.E. – CITY ENGINEER

PROJECT NUMBER	INDEX CODE
472-82850	785972

DATE MAR 96 | SHEET 37 OF 49