FHWA REG NO.	STATE	PROJECT NO.	YEAR	SHEET NO.	TOTAL SHEETS
7	KANSAS	87 N-0198-01	2001	20	82

FED. AID NO. –

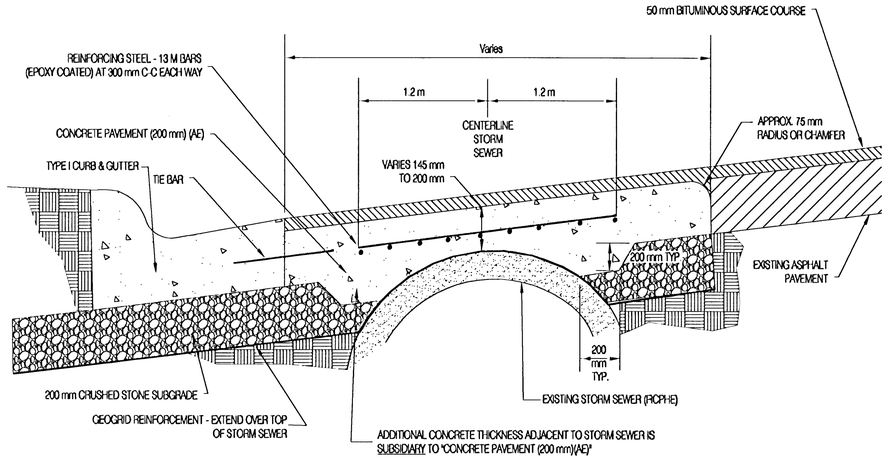

Sta. 3+123 to 3+172

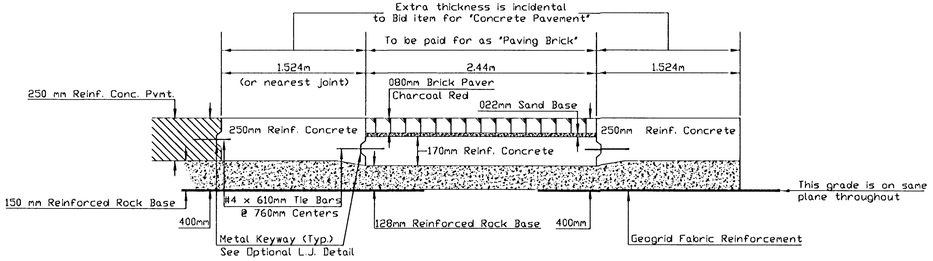

CROSSWALK BRICK PAVER SURFACE DETAIL

NOTE: Construction of the interlocking precast concrete paving stones shall conform to KDOT special provisions 90P-3956

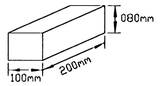

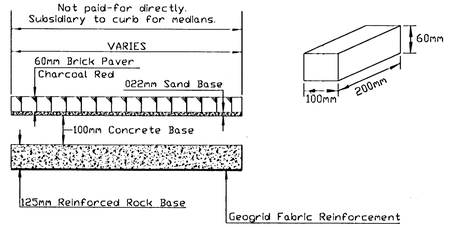

MEDIAN BRICK PAVER SURFACE DETAIL

NOTE: Construction of the interlocking precast concrete paving stones shall conform to KDOT special provisions 90P-3956

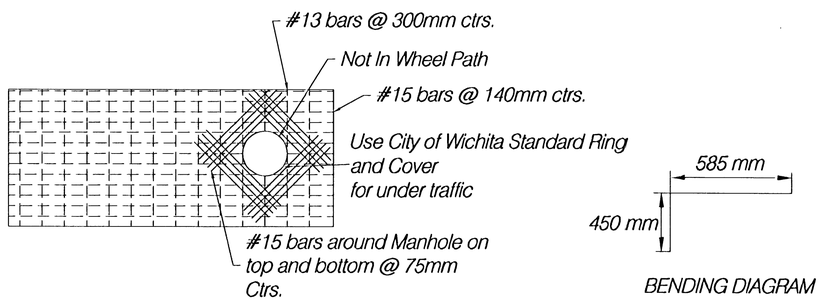

BENDING DIAGRAM

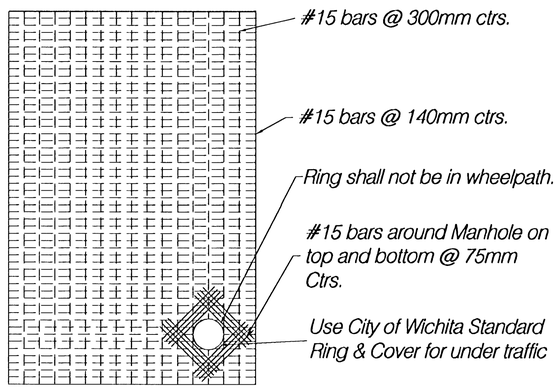

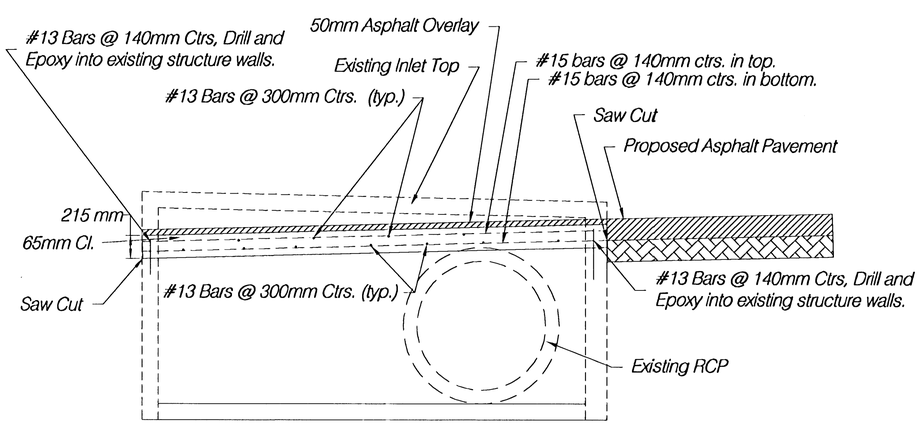

Section A-A

Sta. 3+171.8
NO SCALE

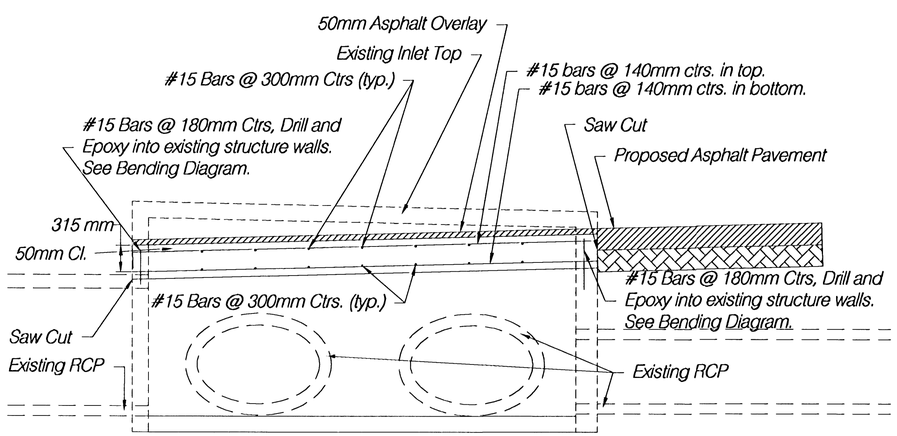

Section A-A

Sta. 3+219.4
NO SCALE

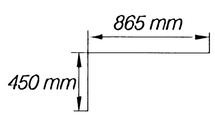

BENDING DIAGRAM

ROCK ROAD

MISCELLANEOUS DETAILS

HWS Consulting Group Inc
Manhattan Office
3206 Kimball Avenue
Manhattan, KS 66503
Phone: (785) 539-2202
Fax: (785) 539-2393

Designed By:	JJH	Checked By:	JDM
Drawn By:	JJH	Date:	Job No. 55-70-2003