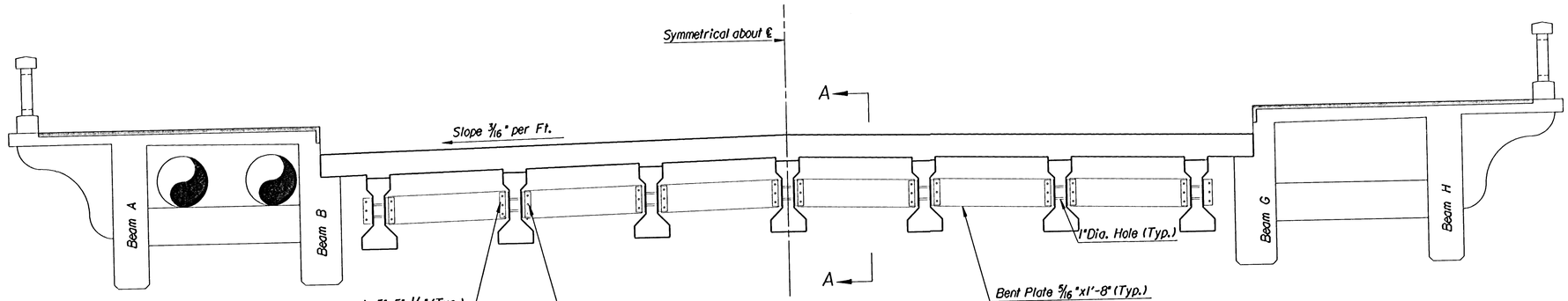

TYPICAL SPAN SECTION

Use Standard Holes in the Beam Angles. Oversized Holes in one end of the Diaphragm, and Vertical Long Slotted Holes in the other end of the Diaphragm. A Hardened Steel Washer is required at Oversized Holes and a Plate Washer is required at the Slotted Hole locations.

ELEVATION OF TEMPORARY DIAPHRAGMS

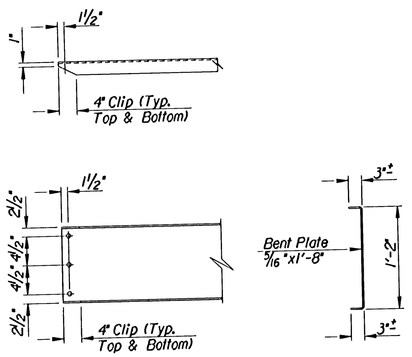

Note:
13/16" Dia. Holes for 3/4" Dia. Bolts.

DETAIL A

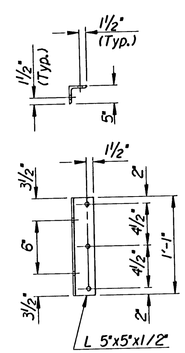

DETAIL B

Note:
All Angles and Bent Plates for Temporary Diaphragms shall be A.S.T.M. A709 Gr. 36 Steel. All Bolts, Nuts and Washers for Fasteners, shall conform to A.S.T.M. A307. The Angles, Bolts, Nuts and Washers shall be Galvanized in accordance with K.D.O.T. Standard Specifications. The Bolts, Nuts, and Washers may be Galvanized in accordance with A.S.T.M. B695, Class 5.

The Temporary Diaphragms shall be installed, as shown in the Details, prior to placing any Superstructure Concrete and shall remain in place until the Concrete Diaphragms and Deck have cured. The Bent Plate Diaphragms, Angles, Nuts, Bolts and Washers shall remain the property of the Contractor and shall be removed from the site. Fill beam holes with an approved epoxy mortar.

Shop Drawings of the Temporary Diaphragms shall be submitted to the Engineer for review and approval.

The Material, Equipment, and Labor necessary for the installation and removal of the Temporary Diaphragms shall not be paid for directly, but shall be Subsidiary to the Bid Item "Prestressed Concrete Beams".

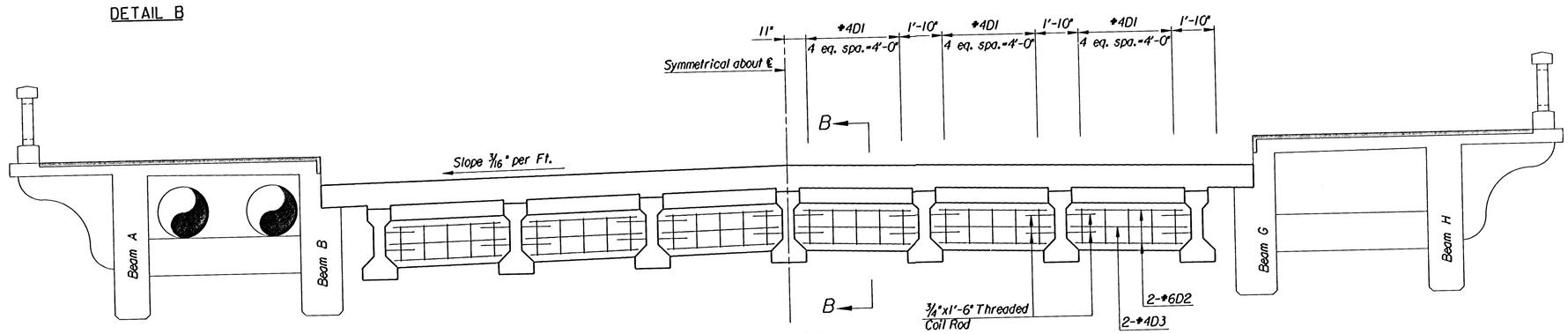

MID-SPAN SECTION
(Typical all spans)

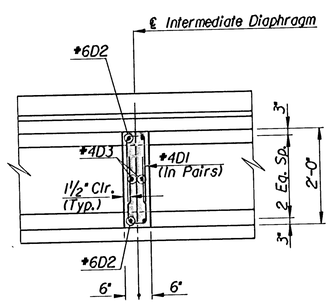

SECTION B-B

No.	Revisions	By	Date
1			

CITY OF WICHITA, KANSAS
JAMES L. ARMOUR, P.E.-ACTING CITY ENGINEER
MURDOCK BRIDGE
OVER LITTLE ARKANSAS RIVER
DIAPHRAGM DETAILS

CITY OF WICHITA PROJECT NO. 472-83895

Professional Engineering Consultants, P.A.
303 S. TOPEKA • WICHITA, KANSAS 67202
316-262-2691 • FAX 316-262-3003

Designed by	R.W.A.	Checked by	R.A.S.
Drawn by	MAF	Date July 2003	Job No. 96940-2

i:/1956/96940/002/diaphragm.dgn
drawn by: ras
plotted by: ras 1-27-2004