FHWA REG NO.	STATE	PROJECT NO.	YEAR	SHEET NO.	SHEETS
7	KANSAS	87-N-0200-01	2001	29	78

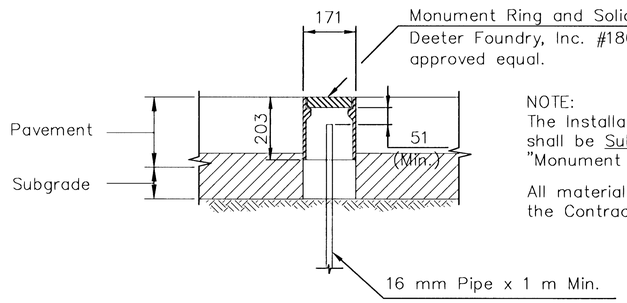

NOTE:
The Installation of Survey Monument shall be Subsidiary to the bid item "Monument Box, Installation Only".

All material to be furnished by the Contractor.

SURVEY MONUMENT DETAIL

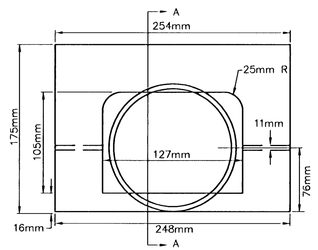

CURB CASTING DETAIL
@ FACE OF CURB (#2449-6)

NOTE: INSTALL CURB CASTING, DEETER #2449-6 OR APPROVED EQUAL, AT CURB & GUTTER. CASTING UNIT SHALL BE ANCHORED WITH GALVANIZED 9mm X 2 13mm BOLTS. CASTING SHALL BE PAINTED WITH TWO COATS OF GREY PAINT, APPLIED IN ACCORDANCE WITH MANUFACTURERS RECOMMENDATION.

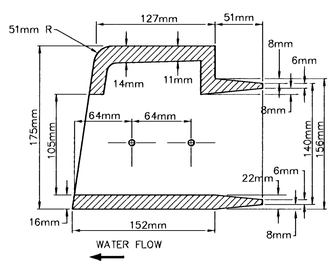

TYPICAL CURB CASTING SECTION A-A
(#2449-6)

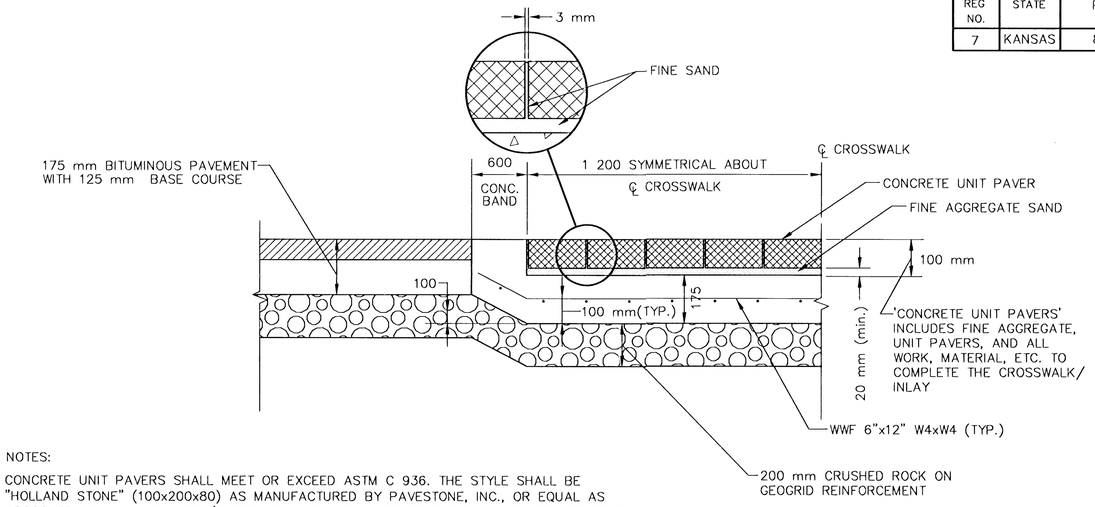

NOTES:

1. CONCRETE UNIT PAVERS SHALL MEET OR EXCEED ASTM C 936. THE STYLE SHALL BE "HOLLAND STONE" (100x200x80) AS MANUFACTURED BY PAVESTONE, INC., OR EQUAL AS APPROVED BY THE ENGINEER. (ALTERNATIVE: CLAY PAVING BRICKS SHALL BE DRY PRESSED BEVEL EDGED STREET PAVERS, DESIGNED FOR HEAVY VEHICLES PER ASTM C 1272, TYPE F APPLICATION PX. SIZE SHALL BE 100x200x76, COMPRESSIVE STRENGTH 5625 Mg/m^2 MINIMUM, AND ABSORPTION 5% MAXIMUM). COLOR SHALL BE RED AND LAYING PATTERN SHALL BE HERRINGBONE. PAYMENT SHALL BE AT THE CONTRACT BID PRICE PER SQUARE METER FOR CONCRETE UNIT PAVERS.
2. ADDITIONAL CONCRETE THICKNESS IN TRANSITION TO CROSSWALK AND 175 mm CONCRETE PAVEMENT SHALL BE SUBSIDIARY TO THE BID PRICE FOR 175 mm CONCRETE PAVEMENT.
3. SAND BEDDING SHALL MEET THE SPECIFICATION REQUIREMENTS FOR FINE AGGREGATE. AN UNCOMPACTED SAND LAYING COURSE SHALL BE SPREAD EVENLY OVER THE AREA TO BE PAVED AND THEN SCREEDED TO A LEVEL OF APPROXIMATELY 20 mm THICKNESS. ONCE SCREEDED AND LEVELED TO THE DESIRED ELEVATION, THE SAND LAYING COURSE SHALL NOT BE DISTURBED IN ANY WAY.
4. PAVERS SHALL BE PLACED WITH THE CHAMFERED SIDE UP, AND JOINT SPACES KEPT UNIFORM APPROXIMATELY 3 mm INCH THICK. THE GAPS AT THE EDGE OF THE PAVED SURFACE SHALL BE FILLED WITH PAVERS CUT TO FIT. CUTTING SHALL BE ACCOMPLISHED TO LEAVE A CLEAN EDGE TOWARD THE TRAFFIC SURFACE, USING A MASONRY SAW. WHENEVER POSSIBLE, NO CUTS SHOULD RESULT WITH A PAVER LESS THAN ONE-THIRD OF ITS ORIGINAL DIMENSION.
5. UNIT PAVERS SHALL BE VIBRATED TO THEIR FINAL LEVEL IN THE SAND LAYING COURSE BY TWO OR THREE PASSES OF VIBRATING COMPACTOR CAPABLE OF 1360 TO 2270 kg COMPACTION FORCE WITH THE SURFACE CLEAN AND JOINTS OPEN.
6. AFTER VIBRATION, CLEAN CONCRETE SAND SHALL BE SPREAD OVER THE PAVER SURFACE, ALLOWED TO DRY, AND VIBRATED INTO THE JOINTS WITH ADDITIONAL PASSES OF THE PLATE VIBRATOR SO AS TO COMPLETELY FILL THE JOINTS. A LIGHT COATING OF SAND SHALL BE SWEPT OVER THE COMPLETED SURFACE AND LEFT TO WEATHER IN.

CROSSWALK DETAILS

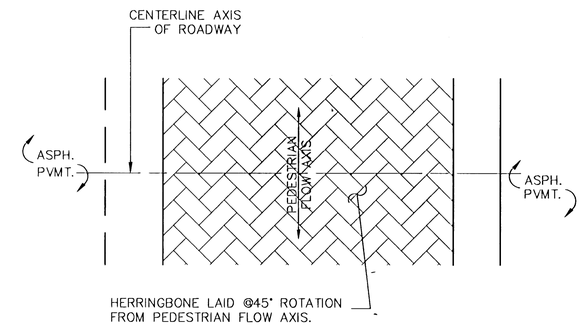

PAVING BRICK SCHEDULE	
STYLE	COLOR
PLAZA STONE (TYPE 1)	TERRA-COTTA/ CHARCOAL BLEND

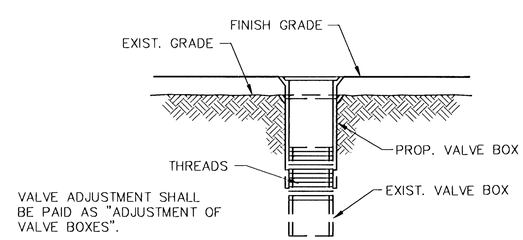

VALVE BOX ADJUSTMENT DETAIL

NO.	DATE	REVISIONS	BY	APP'D
3				
2				
1				

KANSAS DEPARTMENT OF TRANSPORTATION

MISCELLANEOUS DETAILS

PROJECT NO. 87-N-0200-01 SEDGWICK CO.

MKEC ENGINEERING CONSULTANTS, INC.
WICHITA, KANSAS

DESIGNED BY:	DFL	CHECKED BY:	GJA
DRAWN BY:	DFL	DATE: JUNE 2001	SHEET 29 OF 78

G:\CIVIL\99257\DWG\DETAILS\MISC.DWG

G:\CIVIL\99257\DWG\DETAILS\MISC.DWG Fri Oct 19 08:33:42 2001