FHWA REGION NO.	STATE	PROJECT NO.	YEAR	SHEET NO.	TOTAL SHEETS
7	KANSAS	87-N-0200-01	2001	61	78

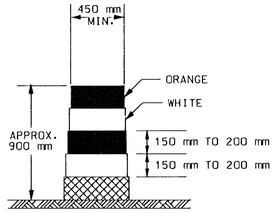

DRUM

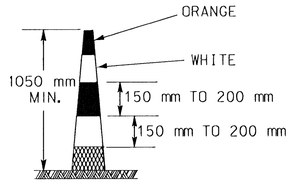

TRIM LINE CHANNELIZER

DRUMS AND TRIM LINE CHANNELIZERS SHALL BE RETROREFLECTORIZED FULL CIRCUMFERENCE WITH AT LEAST TWO ORANGE AND TWO WHITE 150 mm TO 200 mm WIDE STRIPES. ADDITIONAL STRIPES MAY BE NON-REFLECTIVE. IF THERE ARE NON-REFLECTIVE SPACES BETWEEN ADJACENT STRIPES, THEY SHALL BE NO MORE THAN 50 mm WIDE.

ALL RETROREFLECTIVE STRIPES ON DRUMS SHALL BE TYPE III HIGH PERFORMANCE SHEETING. THE WHITE STRIPES ON TRIM LINE CHANNELIZERS SHALL BE TYPE III HIGH PERFORMANCE SHEETING. THE ORANGE STRIPES ON TRIM LINE CHANNELIZERS SHOULD BE FLUORESCENT ORANGE PRISMATIC SHEETING; HOWEVER, TRIM LINE CHANNELIZERS PURCHASED PRIOR TO NOVEMBER 1, 2000, MAY HAVE STRIPES OF ORANGE TYPE III HIGH PERFORMANCE SHEETING, PROVIDED THE DEVICES ARE SPACED ACCORDING TO THE CHART BELOW. PROJECTS LET AFTER JANUARY 1, 2002, WILL REQUIRE THAT THE ORANGE STRIPES ON ALL TRIM LINE CHANNELIZERS BE FLUORESCENT ORANGE PRISMATIC SHEETING.

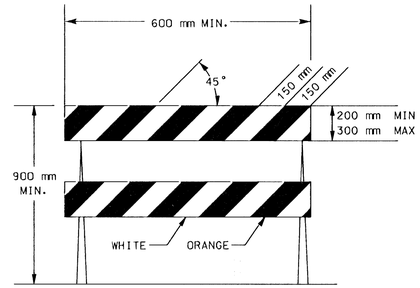

TYPE II BARRICADE

FOR WOODEN BARRICADES, NOMINAL LUMBER DIMENSIONS WILL BE SATISFACTORY.

FOR RAILS LESS THAN 900 mm LONG, 100 mm WIDE STRIPES MAY BE USED.

THE ENTIRE AREA OF BARRICADE RAILS, BOTH FRONT AND BACK, SHALL BE FULLY REFLECTORIZED WITH TYPE III HIGH PERFORMANCE RETROREFLECTIVE SHEETING.

BARRICADES USED ON ROADWAYS WITH SPEED LIMITS OF 45 MPH OR MORE SHALL HAVE A MINIMUM OF 0.175 SQ m OF RETROREFLECTIVE AREA FACING TRAFFIC.

THE STRIPES SHALL SLOPE DOWNWARD TO THE TRAFFIC SIDE FOR CHANNELIZATION.

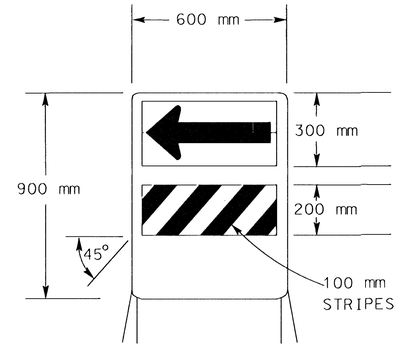

DIRECTION INDICATOR BARRICADE

THE ARROW PANEL SHALL BE BLACK ON FLUORESCENT ORANGE PRISMATIC GRADE SHEETING. THE STRIPES SHALL BE ORANGE AND WHITE TYPE III HIGH PERFORMANCE RETROREFLECTIVE SHEETING SLOPING DOWNWARD IN THE DIRECTION TRAFFIC IS TO PASS.

THE DIRECTION INDICATOR BARRICADE SHOULD BE USED IN SERIES TO DIRECT THE MOTORIST INTO THE INTENDED LANE OF TRAVEL. THE ARROW PANEL SHOULD NOT BE VISIBLE TO OPPOSING TRAFFIC.

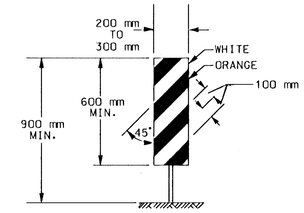

VERTICAL PANEL

THE ENTIRE AREA OF VERTICAL PANELS, BOTH FRONT AND BACK, SHALL BE FULLY REFLECTORIZED WITH TYPE III HIGH PERFORMANCE RETROREFLECTIVE SHEETING. VERTICAL PANELS USED ON ROADWAYS WITH A SPEED LIMIT OF OF 45 MPH OR GREATER SHALL HAVE A MINIMUM OF 0.175 SQ m OF RETROREFLECTIVE AREA FACING TRAFFIC. THE STRIPES SHALL SLOPE DOWNWARD TO THE TRAFFIC SIDE FOR CHANNELIZATION.

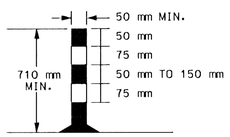

TUBULAR MARKERS

ORANGE CONES

CONES MAY BE USED AS CHANNELIZING DEVICES FOR DAYTIME OPERATIONS ONLY. THEY WILL NOT BE PAID FOR SEPARATELY, BUT WILL BE SUBSIDIARY. TO OTHER TRAFFIC CONTROL BID ITEMS. THE ENGINEER MAY REQUIRE THAT CONES BE SUPPLEMENTED BY OTHER TRAFFIC CONTROL DEVICES IN CERTAIN SITUATIONS SUCH AS OPEN TRENCHES.

CHANNELIZER PLACEMENT:

(A) THE SPACING BETWEEN DEVICES IN THE TAPER SHOULD NOT EXCEED A DISTANCE IN METERS EQUAL TO 0.3 TIMES THE POSTED SPEED LIMIT IN MPH PRIOR TO WORK STARTING.

(B) THE SPACING BETWEEN DEVICES IN THE WORK ZONE SHOULD NOT EXCEED A DISTANCE IN METERS OF 0.6 TIMES THE POSTED SPEED LIMIT IN MPH PRIOR TO WORK STARTING.

(C) WHERE EXISTING CONDITIONS WARRANT, THE ENGINEER MAY REQUIRE A DECREASE IN THE SPACING STIPULATED ABOVE. WHEN TRAFFIC CONTROL IS BID LUMP SUM, ADDITIONAL DEVICES WILL BE PAID FOR AS EXTRA WORK.

(D) CHANNELIZING DEVICES SHALL BE PLACED FOR OPTIMUM VISIBILITY, NORMALLY AT RIGHT ANGLES TO THE TRAFFIC FLOW.

(E) CHANNELIZING DEVICES PLACED ALONG SHOULDER EDGES OR IN DROPOFFS SHALL HAVE A MINUMUM OF 600 mm FROM THE TOP OF THE CHANNELIZING DEVICE TO THE TOP OF THE PAVEMENT.

LOCATION / ITEM	CROSS-OVERS	DIVERSIONS	TANGENTS	TAPERS	RAMPS	HEAD TO HEAD	OBJECT IDENTIFIER	
DRUMS	YES	YES	YES	YES	YES	(1)	YES	
TRIM LINES	(2)	(2)	(2)	(2)	(2)	(1,2)	YES	
PORTABLE VERTICAL PANELS	(3)	(3)	(3)	(3)	(3)	(1,3)	YES	
DIRECTION INDICATOR BARRICADE	NO	NO	NO	YES	NO	NO	NO	
TYPE II BARRICADE	(3)	(3)	(3)	(3)	NO	NO	YES	
PORTABLE TUBULAR MARKERS	NO	NO	YES	NO	YES	(1)	NO	
FIXED TUBULAR MARKERS	(4)	(4)	(4)	(4)	(4)	YES	NO	
FIXED VERTICAL PANELS	(4)	(4)	(4)	(4)	(4)	(4)	YES	

(1) Not allowed on freeways or expressways, or for durations of more than three days.

(2) Place at normal spacing if sheeted with fluorescent orange prismatic sheeting. Place at 1/2 spacing in tapers but pay at the rate of one device per full space if orange stripes are Type III high performance sheeting. Intermixing of trim line channelizers with fluorescent orange and orange Type III high performance sheeting is not allowed.

(3) Slashes must slope down toward direction traffic is to pass.

(4) Fixed tubular markers or Vertical Panels may be substituted for any of the above situations with the approval of the Engineer.

TAPER FORMULAS:

$L = WS$ FOR SPEEDS OF 45 MPH OR MORE

$L = WS^2/60$ FOR SPEEDS OF 40 MPH OR LESS

WHERE: L = MINIMUM LENGTH OF TAPER IN METERS
S = NUMERICAL VALUE OF POSTED SPEED PRIOR TO WORK STARTING IN MPH
W = WIDTH OF OFFSET IN METERS

NO.	DATE	REVISION	BY	APP'D
3				
2				
1				

KANSAS DEPARTMENT OF TRANSPORTATION

CHANNELIZING DEVICES

TE702SI 9/1/00

FHWA APPROVAL 9-1-00 | APP'D Michael P. McKenna
DESIGNED L.E.R. | DETAILED B.A.H. | QUANTITIES | TRACED
DESIGN CK. | DETAIL CK. | QUAN. CK. | TRACE CK.

Plotted By : @@USERNAME@@ Thacher Bldg., 4th Floor
Plot File : @@@@@@@@@@@@DGNSPEC@@@@@@@@@@@@
Plot Date : @@@@@STIME@@@@@@