FHWA REGION NO.	STATE	PROJECT NUMBER	FISCAL YEAR	SHEET NUMBER	TOTAL SHEETS
7	KANSAS	87N-0078-01	1997	8	33

DATE	BY	
REFERENCES NOTED		
REFERENCES CHECKED		

INLET & MANHOLE DATA

ROUTING SEQUENCE FROM	ROUTING SEQUENCE TO	LOCATION OF INSTALLATIONS STATION	ROUTE IDENTIFICATION	DIST. RT./LT.	CONSTRUCT OR INSTALL INLET-MANHOLE (SPEC.)	DIMENSIONS L (M)	W (M)	H (M)	DIA.	STACK	ELEVATIONS TOP	FLOOR	INFLOW CONDUITS SIZE DIRECTION	FLOWLINE (ELEV.)	SIZE DIRECTION	FLOWLINE (ELEV.)	SIZE DIRECTION	FLOWLINE (ELEV.)	OUTFLOW CONDUITS SIZE DIRECTION	FLOWLINE (ELEV.)
		0+353.518																	900mm E	408.450
TOTALS																				

CONDUIT DATA

CONSTRUCT OR INSTALL TYPE OF CONDUIT SIZE	MATERIAL	LENGTH (Meters)	CONDUIT FLOW LINES INFLOW (ELEV.)	OUTFLOW (ELEV.)	SEWER EXCAVATION (FOR INFO. ONLY) ROCK (C.M.)	COMMON (C.M.)	STORM SEWER RCP CONDUITS (meters) 900mm	PLUGS 900mm	END SECTIONS	PIPE CLASS / Ga.	REMARKS
900mm	RCP	15 215	408.540	408.450		68.9	15 215	1			Connect to RFB, plug east end of pipe. 12.000 m of #16 rebar incidental to 900 mm RCP conduit. See detail this sheet.
TOTALS						68.9	15 215	ø 1			

ø FOR INFORMATION ONLY

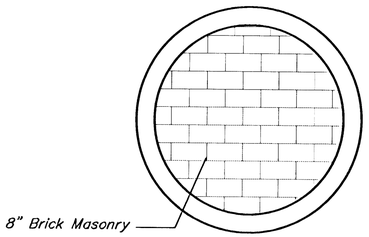

PIPE PLUG DETAIL

1. Mortar used in plug construction shall be in accordance with standard specifications.
2. All brick used in stack construction shall meet standard specifications.
3. Pipe plugs shall be Subsidiary to the bid item for the pipe being plugged.

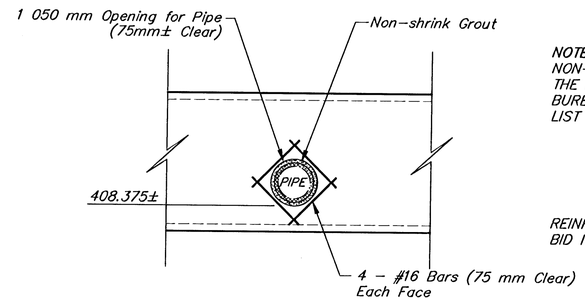

CONNECTION DETAIL @ REINF. CONC. BOX

NOTE:
NON-SHRINK GROUT SHALL BE ONE OF THE PREQUALIFIED PRODUCTS FROM THE BUREAU OF MATERIAL & RESEARCH'S LIST PQL-12.

Summary of Rebar

Size	Number	Length
16	8	1 500

REINFORCING BARS ARE INCIDENTAL TO BID ITEM FOR 900mm RCP CONDUIT.

SCHEDULE OF INLETS & MANHOLES
29TH STREET BRIDGE

SRB 924 NORTH MAIN WICHITA, KANSAS 67203 316-264-5005 FAX 264-4621
SAVOY, RUGGLES & BOHM, P.A.
ENGINEERING & SURVEYING

PROJECT NUMBER 472-82414

DRAWN	DESIGN	REVIEW	DATE	UTILITY	SRB JOB
KWL	CMB/KWL		Jan. 16, 1997	.	95E

REVISED

PROJECT SHEET 10 OF 33