FHWA REGION NO.	STATE	PROJECT NO.	FISCAL YEAR	SHEET NO.	TOTAL SHEETS
7	KANSAS	87-N-0223-01	2002	19	56

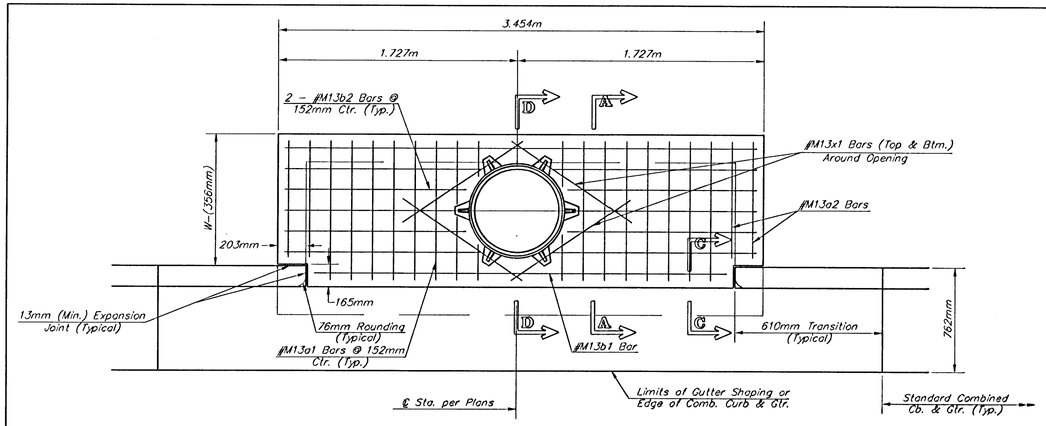

PLAN

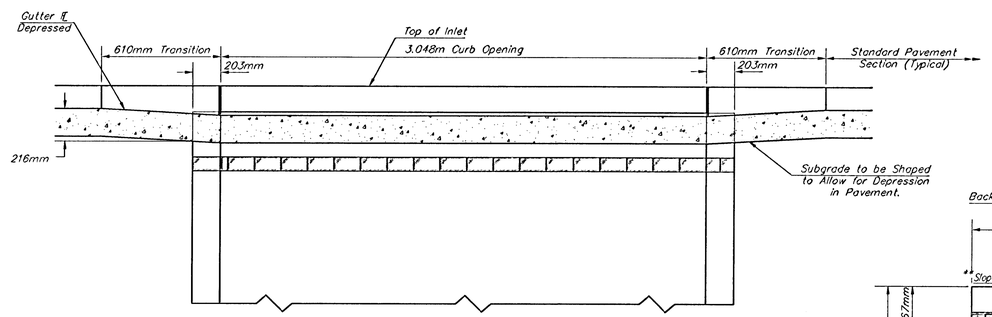

ELEVATION

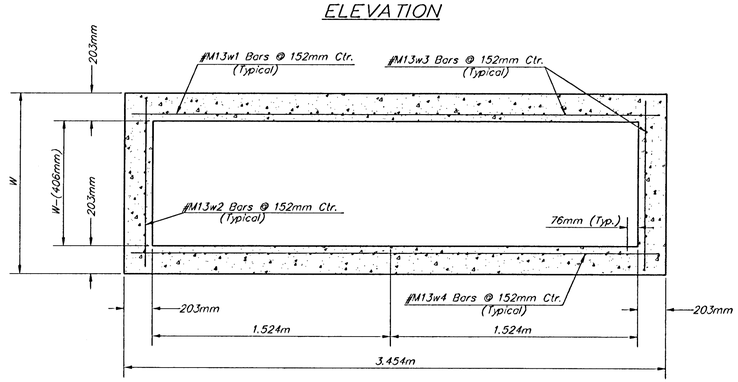

SECTION B-B

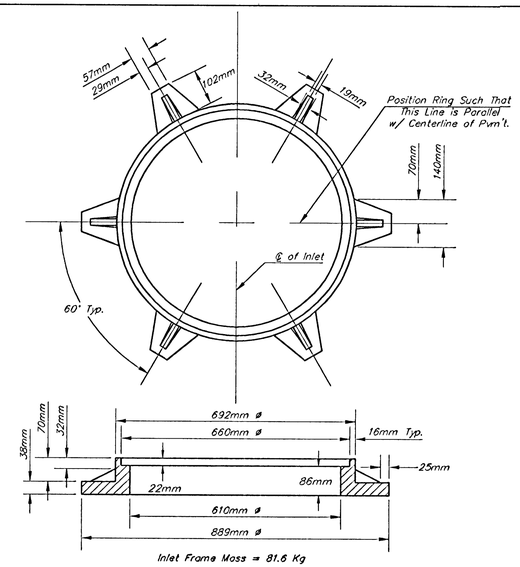

Inlet Frame Mass = 81.6 Kg

MANHOLE RING AND COVER

*See City of Wichita Standard Manhole Ring and Cover Detail Sheet for Cover Details to Be Used With Inlet Frame.

PRECAST SLAB AND FLOOR REINFORCING											
		W = 1.321m		W = 1.626m		W = 1.930m		W = 2.235m		W = 2.540m	
MARK	SIZE	NO.	LENGTH	NO.	LENGTH	NO.	LENGTH	NO.	LENGTH	NO.	LENGTH
a1	#M13	13	2.007m	13	2.616m	13	3.226m	13	3.835m	13	4.445m
* a2	#M13	4	1.829m	4	2.438m	4	3.048m	4	3.658m	4	4.267m
a3	#M13	23	1.245m	23	1.549m	23	1.854m	23	2.159m	23	2.464m
b1	#M13	1	2.972m	1	2.972m	1	2.972m	1	2.972m	1	2.972m
* b2	#M13	23	3.378m	29	3.378m	35	3.378m	41	3.378m	47	3.378m
x1	#M13	8	1.168m	8	1.270m	8	1.372m	8	1.473m	8	1.575m
WALL REINFORCING											
		W = 1.321m		W = 1.626m		W = 1.930m		W = 2.235m		W = 2.540m	
MARK	SIZE	NO.	LENGTH	NO.	LENGTH	NO.	LENGTH	NO.	LENGTH	NO.	LENGTH
w1	#M13	①	3.378m	①	3.378m	①	3.378m	①	3.378m	①	3.378m
w2	#M13	②	1.245m	②	1.550m	②	1.854m	②	2.159m	②	2.464m
w3	#M13	30	③	34	③	38	③	42	③	46	③
w4	#M13	22	④	22	④	22	④	22	④	22	④

* Field Bend or Cut Reinforcing as Required for Clearance.

① ((H - 572mm)/152mm) + ((H - 851mm)/152mm)

② 2*(H - 572mm)/152mm

③ H - 327mm

④ H - 622mm

STANDARD CURB INLET PRECAST TOPS			
W	PRE-CAST TOP SIZE	PIPE SIZE	CU. M. CONC.
1.321m	1.118m x 3.454m x 191mm	533mm & SMALLER	0.83±
1.626m	1.422m x 3.454m x 191mm	610mm & 762mm	0.83±
1.930m	1.727m x 3.454m x 191mm	914mm & 1.067m	1.03±
2.235m	2.032m x 3.454m x 191mm	1.219m & 1.372m	1.23±
2.540m	2.337m x 3.454m x 191mm	1.524m & 1.676m	1.43±

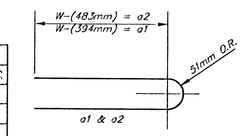

BENDING DIAGRAM

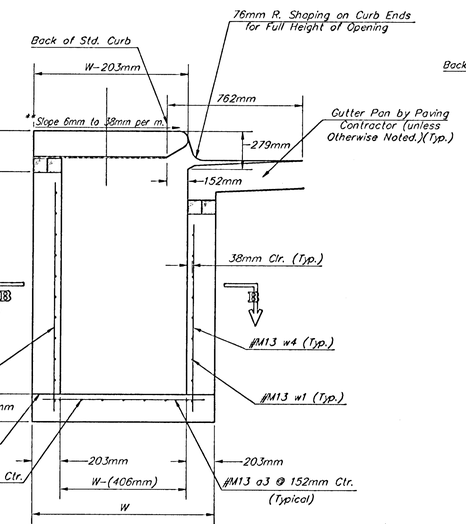

SECTION D-D

NOTES:
** Slope of inlet tops to match sidewalk of parking slopes within limits indicated

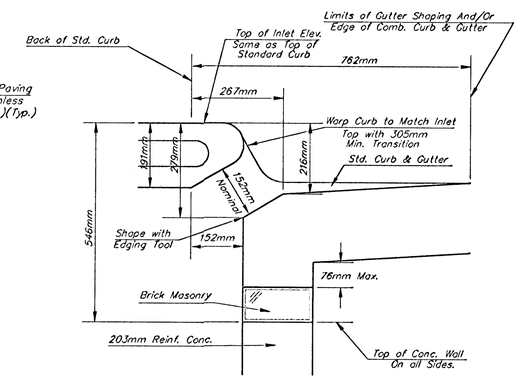

SECTION C-C

GENERAL NOTES:

Concrete shall be C.O.W. standard paving mix. All exposed edges shall be finished with an edging tool. Reinforcing bars shall be field bent or cut to clear pipes and inlet rings. All bars are #M13 bars @ 152mm spacing and shall have a minimum clearance of 38mm unless otherwise noted. Floors of inlet shall be shaped with 8 sack sand mix concrete to increase hydraulic efficiency such that the inlet will be self cleaning between all inlet and/or outlet pipe(s).

Concrete tops to be installed on thin mortar cushion to insure full support along walls. Concrete tops may be cast in place or precast.

The ends of all pipes installed in inlets shall be cut off flush with the inside face of the inlet wall.

See Pavement Underdrain Detail, Sheet 7.

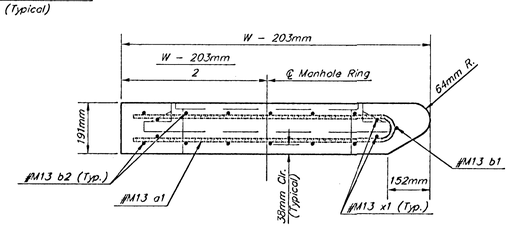

SECTION A-A

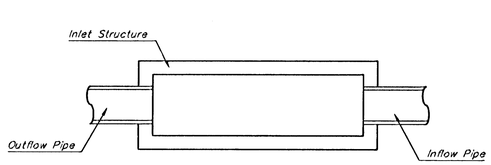

CASE I

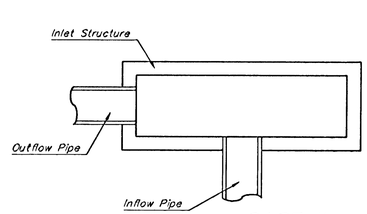

CASE II

KDOT METRIC

Revised - July 23, 1998
Revised - Feb. 16, 1989

PROJECT NUMBER	SHEET NAME	ENGINEERING DIRECTORY
472-83781	Mstyp1-d	F:\HarryMcLean\Details

DESIGN	DRAWN	APPROVED	DATE	SCALE	BAUGHMAN NO
Staff	Staff	Staff	Aug 2003	None	01-03-E943

CAPITAL IMPROVEMENT PROJECT
STANDARD TYPE 1 DOUBLE CURB INLET DETAILS
INLET OPENING - 152mm X 3.048m

BAUGHMAN COMPANY, P.A.
ENGINEERING, SURVEYING, & PLANNING
316-262-7271 * 315 ELLIS * WICHITA, KANSAS 67211

SHEET 19 OF 56