PLOTTED: Thursday, September 15, 2016 @ 10:32PM

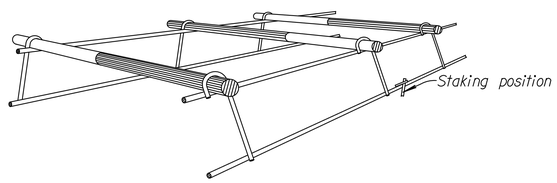

PERSPECTIVE VIEW

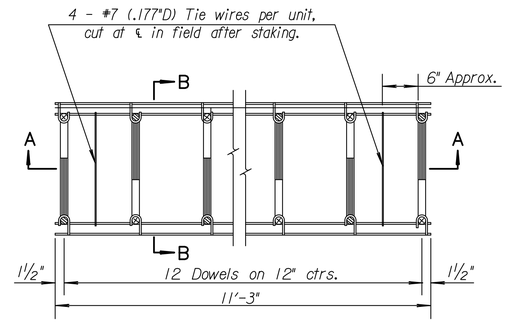

PLAN VIEW

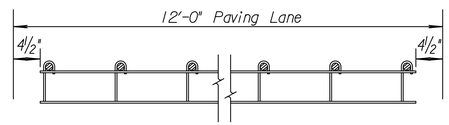

SEC. A–A

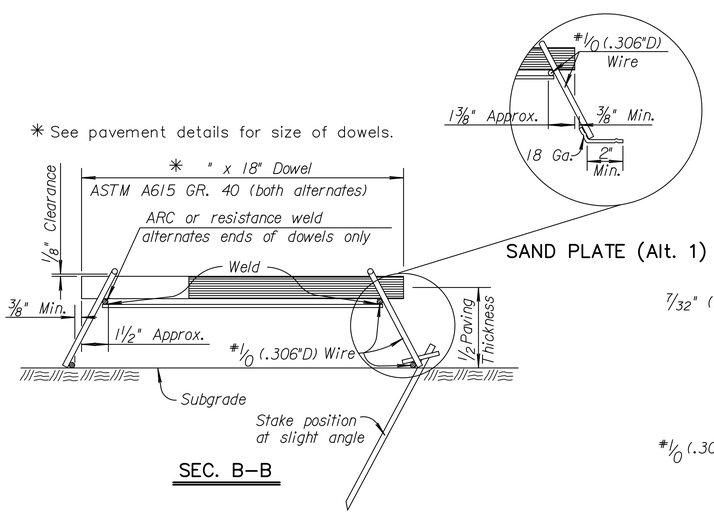

SAND PLATE (Alt. 1)

SEC. B–B

CONTRACTION JOINT

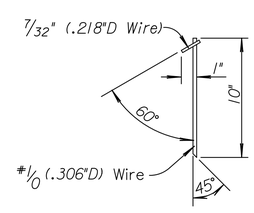

STAKE DETAIL

(6 Pieces minimum required)

GENERAL NOTE

Dowel bar insertion may be by mechanical dowel placers regardless of the joint spacing.

Each dowel bar shall be coated with an epoxy coating that meets the standard specifications. The coating material shall be a powdered epoxy resin approved by the City of Wichita and shall be uniformly applied according to accepted practiced and the resin manufacturer's recommendations. For Alt. 1 the coating need not be applied to the end faces of the bars and will not be required within 2" of the end which will be fixed in the supporting basket by welding.

The cutting to length of the dowel bars shall be done in such a manner to result in no appreciable deformation of the ends.

Alt. 1 (Baskets)

Wire sizes shown are minimum required.

Basket to be staked to sub–grade, as shown. Ramset or similar type fastener with clip to be use when subgrade condition requires it.

A string line shall be stretched between the pavement forms along the center line of joint. The position of the joint shall be carefully marked so that the saw cut will coincide with the center line of the joint.

In order to identify the location to the bond breaker application, the working end of dowel and the supporting leg shall receive a light application of red paint at the place of fabrication. The bond breaker to be applied in the field prior to concrete placement shall consist of coating approximately three–fifths of the length of each dowel bar with hard grease at the working end identified by the red paint.

The entire joint assembly shall be carefully leveled so that the dowels are parallel to the slab surface and free to slide in the dowel holders. Any coating scraped off the dowels in assembling the joint shall be replaced.

After the complete contraction joint is assembled, it shall be checked to be certain that the vertical plane of joint will be perpendicular to the slab unless shown otherwise on the plans. The dowels shall be checked to be certain that they are level and will remain in a position parallel with the finished surface of the slab.

Concrete shall be placed over and adjacent to the joint in accordance with the requirements of the Specifications.

Other approved designs may be used in lieu of the type shown.

Alt. 2 (Mechanical placement)

Joint spacing shall be normal to centerline.

The pavement shall be placed and consolidated to full depth prior to insertion of the dowel bars.

The dowel bars shall be coated with a bond breaking agent prior to insertion into the plastic concrete.

The dowel bars shall be inserted into the plastic concrete ahead of the finishing beam or screed.

The installing device shall consolidate the concrete around the dowel bars such that no voids exist, without the supplemental use of hand held vibrators.

The dowel bars shall be located within one inch of the planned transverse location and within the range of depth of $D/2 \pm 0.1$ D measured from mid depth and mid length of the bar where D represents the pavement thickness.

The dowel bars shall be located within two inches of the planned longitudinal location.

The dowel bars shall be parallel to the pavement surface and centerline within a tolerance of one half inch in 18 inches in both the vertical and horizontal direction.

The forward movement of the finishing beam or screed shall not be interrupted by the inserting of the dowel bars.

A positive method of marking the locations of the transverse joints shall be provided.

DOWEL SIZE	
D (in.)	Diameter
6 < D < 9	1"
9 ≤ D < 11	1 ¼"
D ≥ 11	1 ½"

PAVEMENT DEPTH

D=9"

REVISION DATE: DEC 2014

CITY OF WICHITA

PUBLIC WORKS & UTILITIES
ENGINEERING DIVISION

CONTRACTION & EXPANSION JT. DOWEL ASSEMBLIES

CITY ENGINEER
GARY JANZEN, P.E.

PROJECT NUMBER	OCA NUMBER	DATE
472-85213	707089	

CITY ENGINEER'S OFFICE
CITY HALL - SEVENTH FLOOR
455 NORTH MAIN STREET
WICHITA, KANSAS 67202-1620
(316) 268-4501

SHEET
41 OF 125

PV–142

J:\PROJECTS\2015\150\104017B_COW_21ST & OLIVER_XXXXXX CAD\SHTS\05 CIVIL\PAV\157RED05.DWG