E.F. INDICATES EACH FACE
N.F. INDICATES NEAR FACE
F.F. INDICATES FAR FACE

STATE	PROJECT NO.	YEAR	SHEET NO.	TOTAL SHEETS
KANSAS	87 N-0230-01	2003	26	73

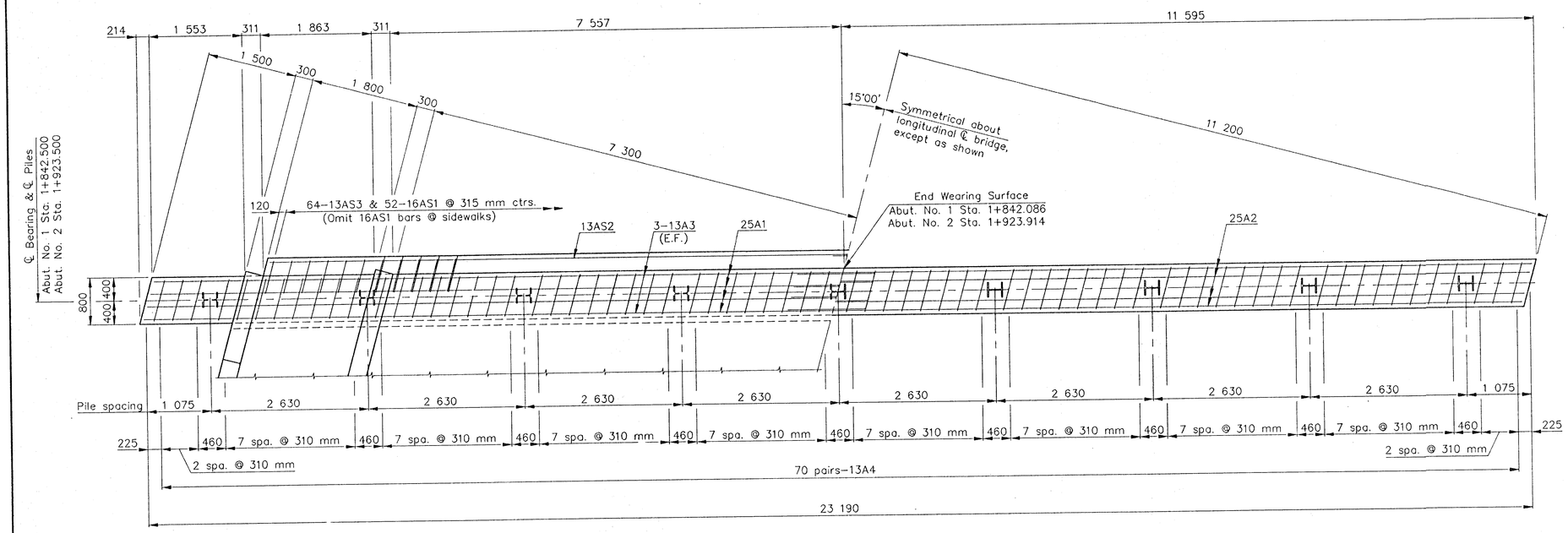

REINFORCING STEEL IN TOP

REINFORCING STEEL IN BOTTOM

PLAN OF ABUTMENT

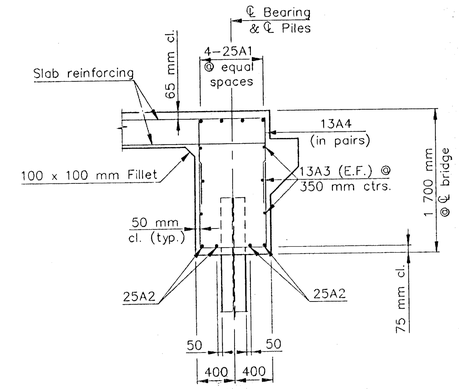

TYPICAL SECTION

(Perpendicular to abutment)

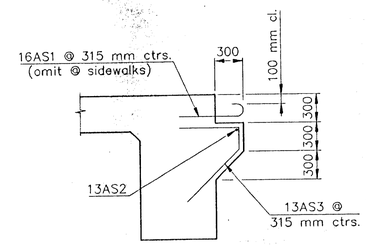

PAVEMENT SEAT DETAIL

(Perpendicular to abutment)

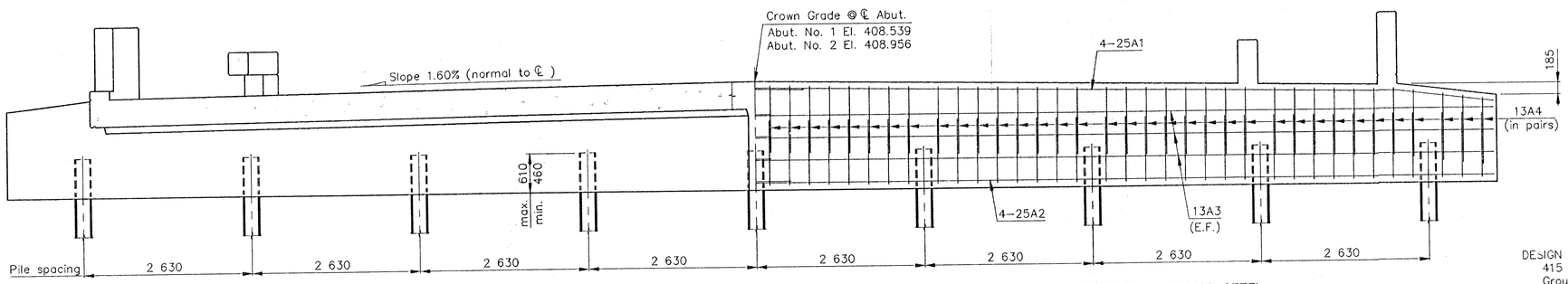

HALF ELEVATION

FRONT ELEVATION

HALF ELEVATION REINFORCING STEEL

Note: Pile elevations based on maximum embedment.

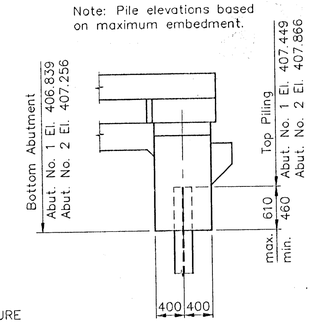

END ELEVATION

DESIGN PILE PRESSURE
415 kN per Pile
Group I Loading

PROJECT NO. 87 N-0230-01

ABUTMENT DETAILS

17TH STREET NORTH OVER COWSKIN CREEK

Cook, Flatt & Strobel
ENGINEERS, P.A.

DESIGNED RSC | SCALE

1:40 (1:04)