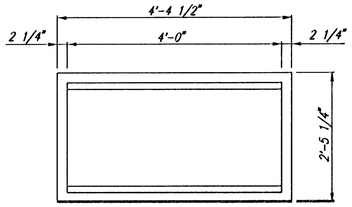

FRAME DETAIL
(Wt.=460 lbs.)

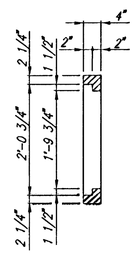

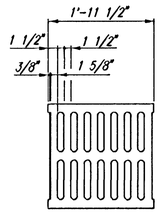

GRATE DETAIL
(Wt.=180 lbs.)

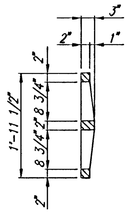

GENERAL NOTES

CONCRETE SHALL BE C.O.W. STANDARD PAVING MIX. ALL EXPOSED EDGES SHALL BE FINISHED WITH AN APPROVED EDGING TOOL.

REINFORCING STEEL SHALL BE A MINIMUM GRADE 40, A.S.T.M. A615. ALL DIMENSIONS RELATIVE TO PLACEMENT OF REINFORCING ARE TO THE CENTERLINE OF BARS UNLESS OTHERWISE NOTED.

INLET CASTINGS SHALL BE MANUFACTURED USING GOOD QUALITY GRAY IRON CONFORMING TO CLASS 30 OF A.S.T.M. DESIGNATION A-48. DIMENSIONS AND WEIGHTS SHOWN ON THE DETAILED DRAWINGS SHALL BE CONSIDERED AS MINIMUM REQUIREMENTS AND ANY DEVIATIONS FROM THE DIMENSIONS SHOWN MUST BE SPECIFICALLY APPROVED. THE FINISHED CASTINGS SHALL BE OF UNIFORM QUALITY, FREE FROM BLOWHOLES, POROSITY, HARD SPOTS, SHRINKAGE DISTORTIONS OR OTHER DEFECTS.

CONSTRUCTION REQUIREMENTS AND MATERIALS FOR MASONRY WALLS SHALL CONFORM TO THE REQUIREMENTS OF THE STANDARD SPECIFICATIONS.

INLET FLOOR SHALL BE SHAPED WITH UNREINFORCED CONCRETE (8 SACK SAND MIX) TO CREATE FLOW CHANNELS AND TO INCREASE HYDRAULIC EFFICIENCY SUCH THAT THE INLET WILL BE SELF CLEANING BETWEEN ALL INLET AND/OR OUTLET PIPES.

AREA INLETS SHALL BE MEASURED AND PAID FOR AT THE CONTRACT UNIT PRICE BID PER EACH. THIS SHALL BE CONSIDERED FULL COMPENSATION FOR ALL EXCAVATION, BACKFILLING, MATERIALS, LABOR, CONNECTION TO EXISTING STRUCTURES (IF REQUIRED), EQUIPMENT, TOOLS, AND INCIDENTALS NECESSARY TO COMPLETE THE WORK.

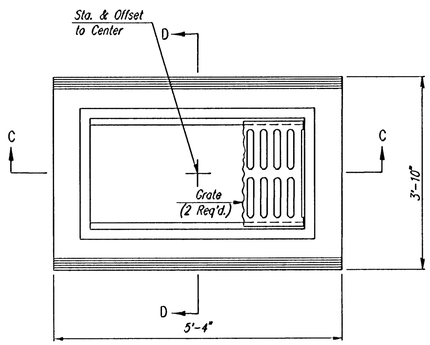

PLAN

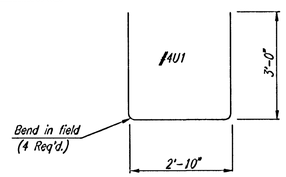

BENDING DIAGRAM

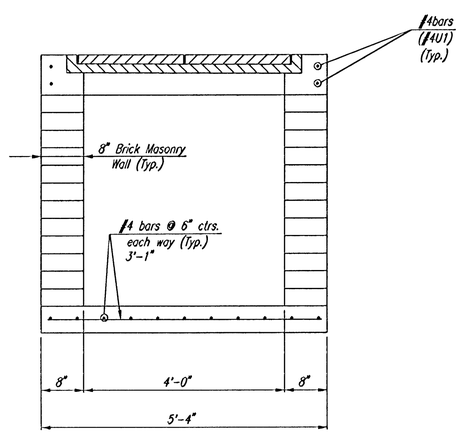

SECTION C-C

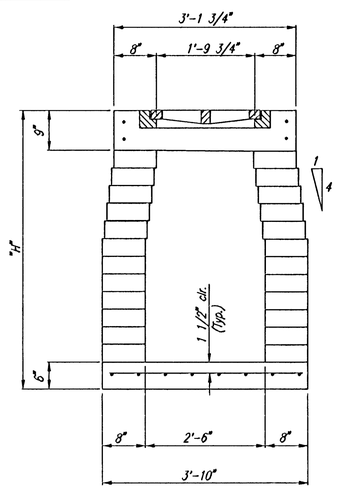

SECTION D-D

AREA INLET

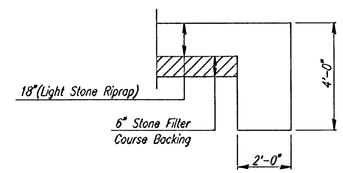

TYPICAL SECTION THRU TOEWALL
NO SCALE

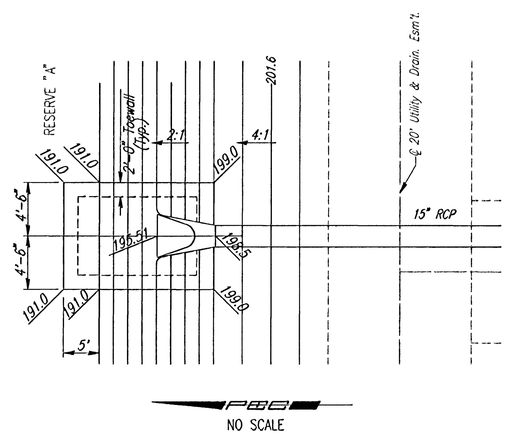

NO SCALE

RIPRAP PLAN
SWS LINE NO. 1

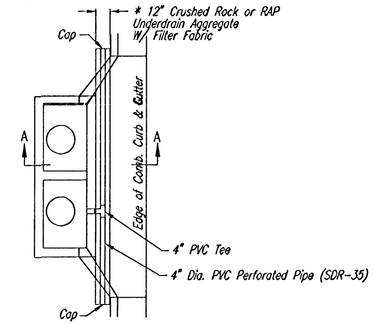

PLAN

* UNDERDRAIN AGGREGATE
PERCENT OF AGGREGATE RETAINED

1"	0
3/4"	0-10
3/8"	45-80
#4	90-100
#8	95-100

ROCK QUALITY SHALL CONFORM TO THE REQUIREMENTS SPECIFIED BY THE KDOT 1990 EDITION STANDARD PECIFICATION SUBSECTION 1102 FOR DURABILITY CLASS 1.

PAVEMENT UNDERDRAIN LOCATIONS		
STREET	STATION	SIDE
BRONCO	84+19.45	Lt.
LINBERG	57+21.81	Lt. & Rt.

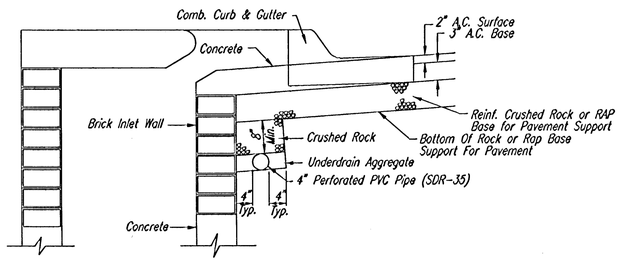

(Min. 16 Perforations Per Lin. Ft. @ 1/4" Dia.)
Perforations To Be on Bottom Half

SECTION A-A

PAVEMENT UNDERDRAIN DETAIL

NOTE: PLACE 4" PVC PERFORATED PIPE AT ALL DRAINAGE SUMP LOCATION

COST OF UNDERDRAIN SYSTEM TO BE INCIDENTAL TO THE REINFORCED CRUSHED ROCK OR REINFORCED RECYCLED ASPHALT PAVEMENT (RAP) BASE.

INLET TYPE MAY VARY FROM THAT SHOWN.

NOTE: CONTRACTOR SHALL INSTALL SDR 35, 4" DRAIN PIPE STUB ONLY THROUGH WALL OF THIS CURB INLET AND CAP TO ALLOW FUTURE CONNECTION OF TEE AND ADDITIONAL DRAIN PIPE BY OTHERS.

SCALE: 1"=10'

21 NOV 03
RECORD DRAWING

No.	Revision	By	Date

CITY OF WICHITA, KANSAS
NEIL D. CABLE P.E. - CITY ENGINEER

STD. AREA INLET DETAILS
AND RIP RAP DETAILS

CITY OF WICHITA PROJECT NO. 472-83678

Professional Engineering Consultants, P.A.
303 S. TOPEKA • WICHITA, KANSAS 67202
316-262-2691 • FAX 316-262-3003

Designed by	BER, JJD	Job No.	35-02662	Sht. 11 of 17
Drawn by	DEP	Date	January 2003	

DSNR: BER OPER: TJS SCALE: 1=1.00
Q:\2002\02662\000\INLETDTL2 03-04-2003 11:21:39 am