PROJECT NO.	SHEET NO.	TOTAL SHEETS
472-83676	9	23

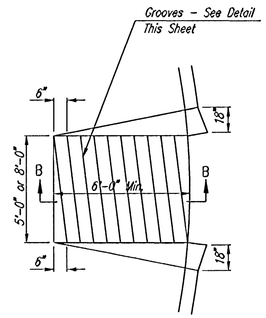

WHEELCHAIR RAMP DETAIL

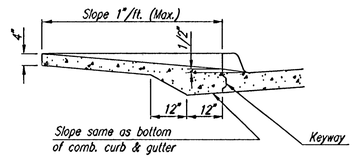

SECTION B-B

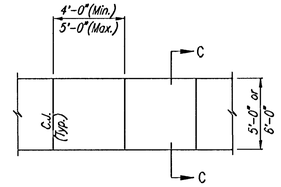

PLAN

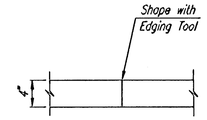

CONSTRUCTION JOINT

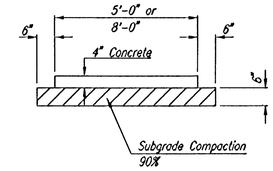

TYPICAL SIDEWALK SECTION

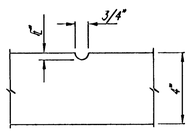

GROOVE DETAIL

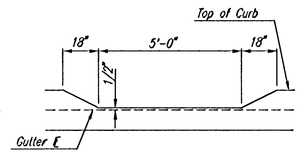

DEPRESSED CURB DETAIL

TYPICAL WHEELCHAIR RAMP DETAILS

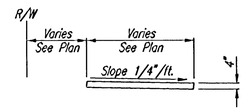

SECTION C-C

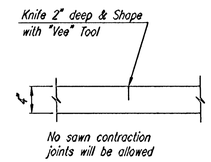

CONTRACTION JOINT

4" WALK DETAILS

SIDEWALK NOTES

1. THE SIDEWALK ALIGNMENT AS SHOWN IS APPROX. ONLY. THE FINAL ALIGNMENT SHALL BE APPROVED BY THE OWNER, LAHAM DEVELOPMENT CO. LLC (316) 292-3950.
2. THE CONTRACTOR SHALL COMPACT 6" SUBGRADE UNDER ALL SIDEWALKS AS DETAILED ON THIS SHEET. ALL SIDEWALK COMPACTION SHALL BE CONSIDERED SUBSIDIARY TO "SIDEWALK CONCRETE (4")".

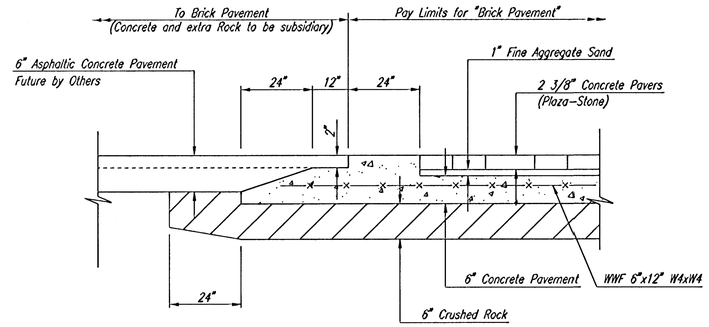

TYPICAL SECTION AT ASPHALT PAVEMENT

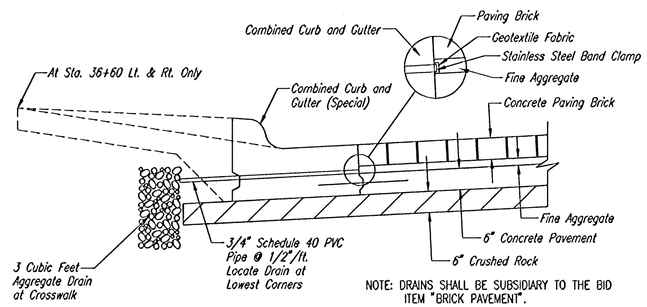

NOTE: DRAINS SHALL BE SUBSIDIARY TO THE BID ITEM "BRICK PAVEMENT".

BRICK PAVEMENT DRAIN DETAIL

(4 Required)

GENERAL NOTES
BRICK PAVEMENT

1. CONCRETE PAVING BRICK SHALL BE 2 3/8" MIN. THICKNESS AND MEET OR EXCEED ASTM C-936-82. PAYMENT SHALL BE AT THE CONTRACT BID PRICE PER SQUARE YARD FOR "BRICK PAVEMENT". PAVING BRICK SHALL BE "PLAZA-STONE" PAVERS AS MANUFACTURED BY "PAVESTONE" (PH. 816-524-9900).
2. THE BID ITEM "BRICK PAVEMENT" SHALL INCLUDE BRICK PAVERS, FINE SAND, CONCRETE PAVEMENT PLUS ALL TOOLS, LABOR, EQUIPMENT NECESSARY TO CONSTRUCT BRICK PAVEMENT COMPLETE AND IN PLACE.
3. SAND BEDDING SHALL MEET THE CITY'S REQUIREMENTS FOR FINE AGGREGATE. AN UNCOMPACTED SAND LAYING COURSE SHALL BE SPREAD EVENLY OVER THE AREA TO BE PAVED AND THEN SCREEDED TO A LEVEL OF APPROXIMATELY 1" THICKNESS. ONCE SCREEDED AND LEVELED TO THE DESIRED ELEVATION, THE SAND LAYING COURSE SHALL NOT BE DISTURBED IN ANY WAY.
4. THE PAVING BRICK SHALL BE INSTALLED PERPENDICULAR AND PARALLEL TO THE MAJOR AXIS OF THE CROSSWALK OR AREA BEING PAVED. STONES SHALL BE PLACED WITH THE CHAMFERED SIDE UP, AND JOINT SPACES KEPT UNIFORM APPROXIMATELY 1/8" THICK. THE GAPS AT THE EDGE OF THE PAVED SURFACE SHALL BE FILLED WITH STONES CUT TO FIT. CUTTING SHALL BE ACCOMPLISHED TO LEAVE A CLEAN EDGE TOWARD THE TRAFFIC SURFACE, USING A MASONRY SAW. WHENEVER POSSIBLE, NO CUTS SHOULD RESULT WITH A PAVER LESS THAN ONE-THIRD OF ITS ORIGINAL DIMENSION.
5. PAVING BRICK SHALL BE VIBRATED TO THEIR FINAL LEVEL IN THE SAND LAYING COURSE BY TWO OR THREE PASSES OF A VIBRATING COMPACTOR CAPABLE OF 3000 TO 5000 POUNDS COMPACTION FORCE WITH THE SURFACE CLEAN AND JOINTS OPEN.
6. AFTER VIBRATION, CLEAN CONCRETE SAND SHALL BE SPREAD OVER THE PAVING STONE SURFACE, ALLOWED TO DRY, AND VIBRATED INTO JOINTS WITH ADDITIONAL PASSES OF THE PLATE VIBRATOR SO AS TO COMPLETELY FILL THE JOINTS. A LIGHT COATING OF SAND SHALL BE SWEPT OVER THE COMPLETED SURFACE AND LEFT TO WEATHER IN.

NOTE: "COMBINED CURB AND GUTTER (SPECIAL)(6 5/8")" AND "MEDIAN COMBINED CURB AND GUTTER (SPECIAL)(8")" SHALL BE BID AND PAID FOR AS "COMBINED CURB AND GUTTER (6 5/8" & 1 1/2")" AND "MEDIAN COMBINED CURB AND GUTTER (8")" RESPECTIVELY.

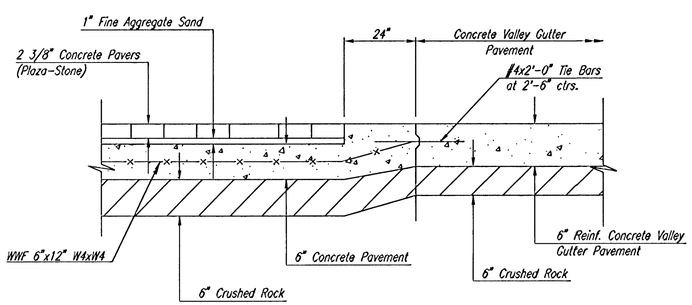

TYPICAL SECTION AT VALLEY GUTTER

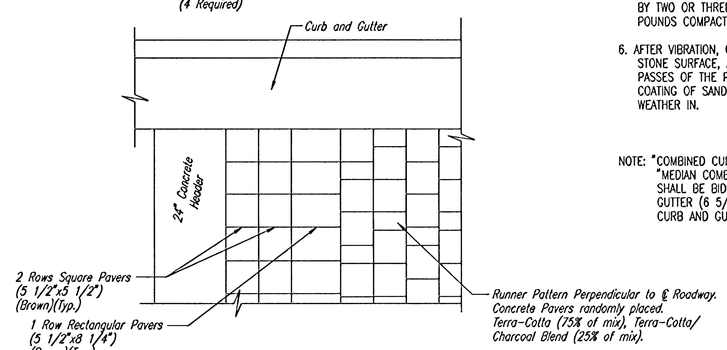

PLAN

Plaza-Stone Pavers

WILSON ESTATES PARKWAY

WILSON ESTATES PARKWAY ENTRANCE AND SIDEWALK DETAILS

Professional Engineering Consultants, P.A.
303 S. TOPEKA • WICHITA, KANSAS 67202
316-262-2691 • FAX 316-262-3003

Designed by	BER	Checked by		
Drawn by	GJR	Date DEC. 2002	Job No. 02621	

DSN/R: SAD OPER: SAD SCALE: 1=4.00
Q:\2002\02621\Streets\standards\ENTDTL 01-29-2003 03:56:41 pm