STATE	PROJECT NO.	YEAR	SHEET NO	TOTAL SHEETS
KANSAS	87 N-0203-01	2003	7	48

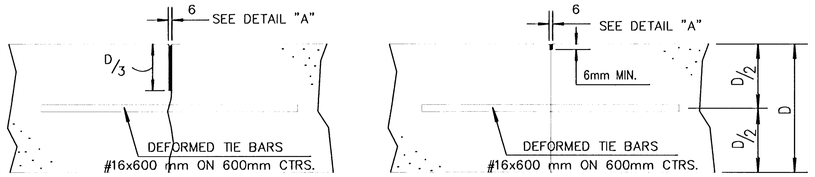

TIED NON-KEYED TIED BUTT CONSTRUCTION

LONGITUDINAL JOINTS

NOTE:
ALL SEALANT IS 3mm TO 6mm BELOW SURFACE AND IS A MINIMUM OF 6mm THICK. A BACKER ROD MAY BE USED TO LIMIT THE AMOUNT OF SEALANT NEEDED TO FILL RESERVIOR. AT LONGITUDINAL CONSTRUCTION JOINTS WHERE THE ADJACENT SLABS ARE AT DIFFERENT ELEVATIONS, THE DEPTH OF SAW CUT FOR THE SEALANT RESERVOIR SHOULD BE MEASURED FROM THE TOP OF THE LOWER SLAB. THIS IS TO ENSURE THAT SUFFICIENT SEALANT IS USED IN THE JOINT.

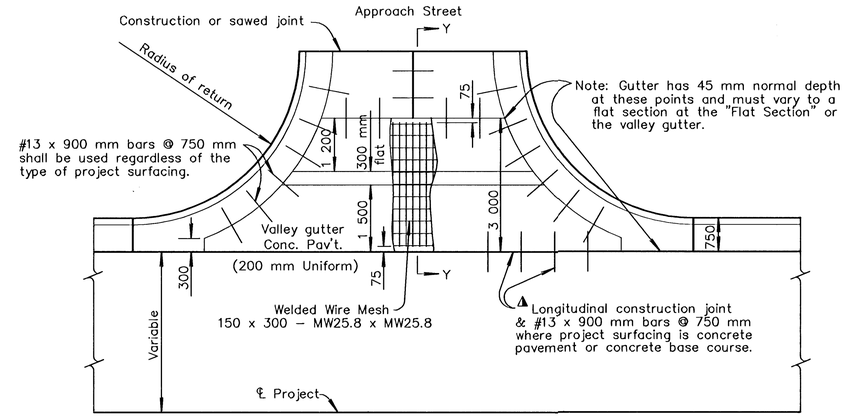

▲ Where the valley gutter does not abut concrete pavement or concrete base course, omit tie bars and Longitudinal construction joint.

PLAN

NOTE: Valley gutter concrete pavement shall be of 200 mm uniform thickness, with welded wire mesh. Approximate mass of welded wire mesh= 2.1 kg/mä.
Where valley gutter, alley, and/or entrance pavement is the only pavement on the project, Grade 25 Concrete (AE) may be used.

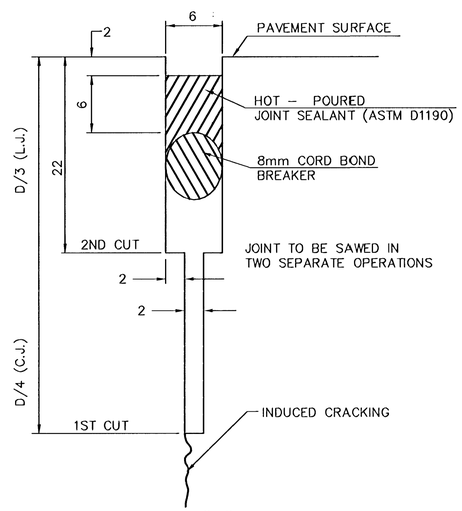

DETAIL "A"

SCALE: NONE

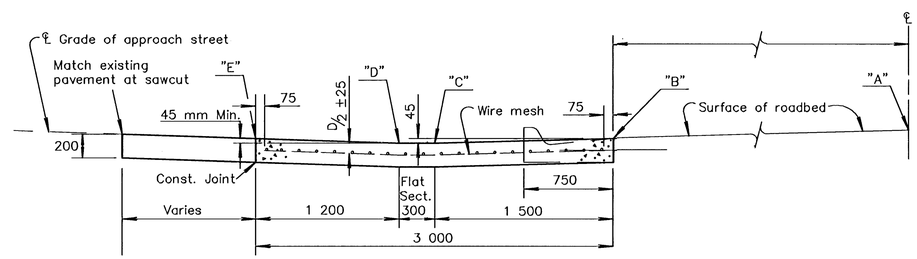

SECTION Y-Y

VALLEY GUTTER SUMMARY

Street	Station	Side	Elev. Pt. "A"	Elev. on ℄ of Approach Str. "B"&"E"	Elev. on ℄ of Approach Str. "C"&"D"	Appr. Str. Grade	m² Conc. pavt. (200 mm Uniform) (AE)	
N. Tara Lane	2+212.677	Rt.	410.054	409.784	409.739	1.12%	67.4	
N. Tara Lane	2+259.458	Lt.	410.644	410.386	410.341	5.65%	76.5	

VALLEY GUTTER

NO.	DATE	REVISIONS	BY	APP'D
2				
1				

KANSAS DEPARTMENT OF TRANSPORTATION

CONCRETE PAVEMENT AUXILIARY DETAILS

PROJ. NO. 87 N-0203-01 SEDGWICK CO.

MKEC ENGINEERING CONSULTANTS, INC.
WICHITA, KANSAS

DESIGNED BY:	KJS	CHECKED BY:	KJS
DRAWN BY:	RSB	DATE: JAN. 2003	SHEET 7 OF 48

G:\CIVIL\01079\DETAILS\RD68ISI.DWG 01/17/03 03:08:00 PM CST