FHWA REGION NO.	STATE	PROJECT NUMBER	FISCAL YEAR	SHEET NUMBER	TOTAL SHEETS
7	KANSAS	87N-0191-01	2002	34	92

	BY	DATE
REFERENCES NOTED		
REFERENCES CHECKED		

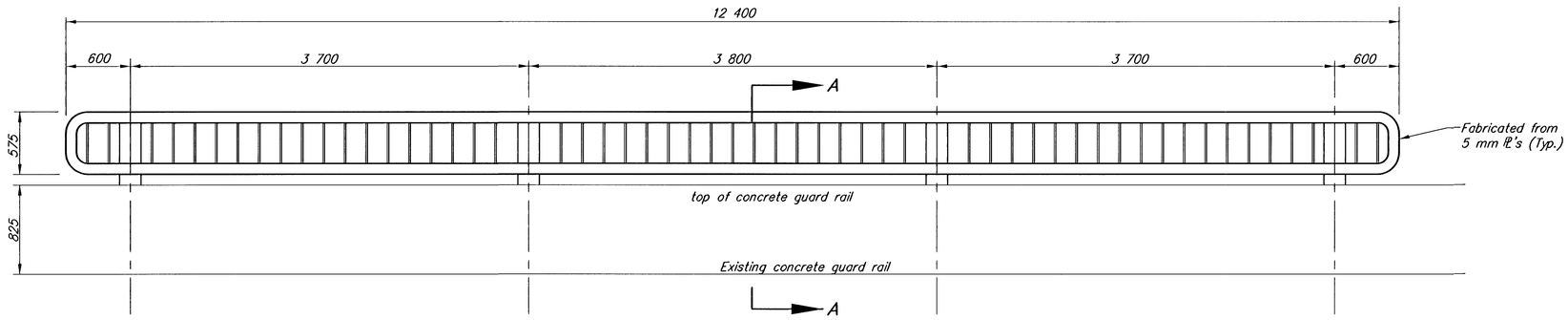

HANDRAIL ELEVATION
Typical 2 Each

BRIDGE HANDRAIL NOTES:

The rail members shall conform to ASTM Designation A36 or equivalent.

Rail shall be fabricated in lengths to include a minimum of two and a maximum of three panels. Posts shall be set vertical. Shims may be used between concrete and base plates of posts.

All parts of Bridge Handrail shall be painted. Shop and field coats shall conform to organic or inorganic Zinc for primer and "High-Build Polyurethane Finish Coat" at the Standard Specifications for State Road and Bridge Construction, 1990 Edition, Kansas Department of Transportation.

All materials, equipment and labor necessary for the installation of the Handrail on the bridge shall be subsidiary to the bid item, "Handrail".

Handrail shall be hunter Green in color. Contractor to submit color chart to Engineer for approval.

Touch Up: All bolts, nuts and studs and other small areas of damaged paint (0.929 m^2 or less) requiring touch up will be prepared and painted w/approved alluminum epoxy mastic primer.

HANDRAIL TABLE	
EACH	RAIL LENGTH
2	12 400
TOTALS	24 800

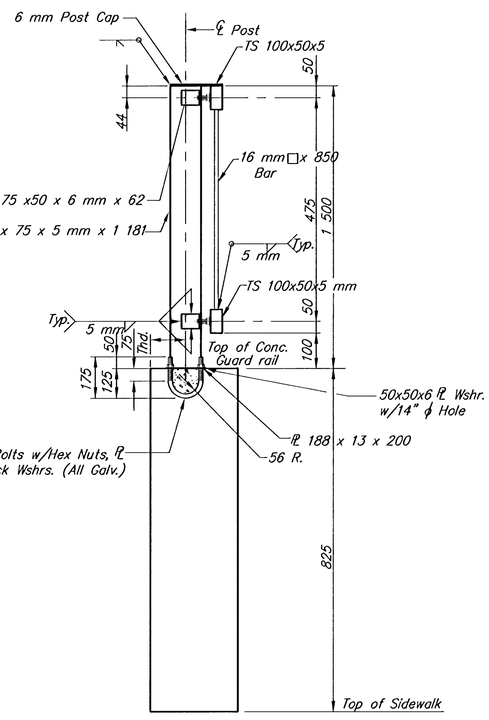

SECTION A-A

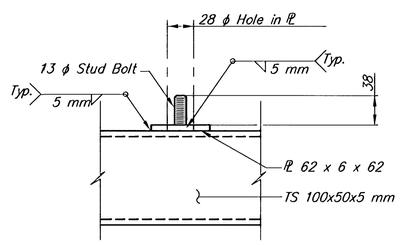

STUD BOLT DETAIL

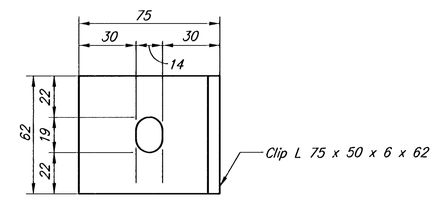

CLIP DETAIL

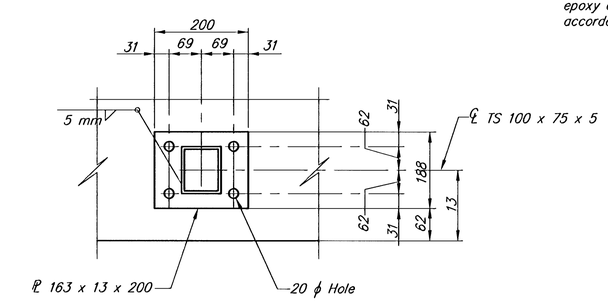

BASE PLATE DETAIL

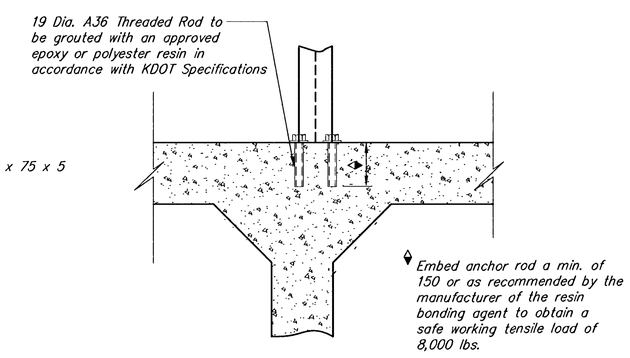

ANCHOR ROD DETAIL

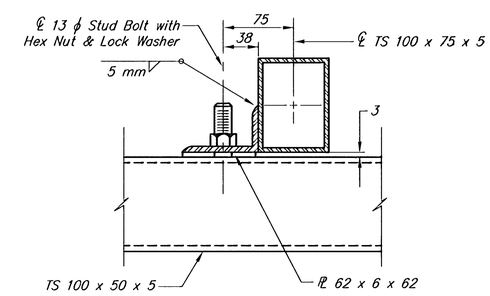

RAIL CONNECTION DETAIL

HARRY STREET IMPROVEMENTS
HANDRAIL DETAILS
WICHITA, KANSAS

Ruggles & Bohm, P.A.
Engineering, Surveying, Land Planning
924 North Main
Wichita, Kansas 67203
www.rbkansas.com
(316) 264-8008
(316) 264-4621 fax
E-mail: info@rbkansas.com

DESIGN	MWS
DRAWN	TEB
REVIEW	
UTILITY	
DRAWING FILE	HDRAIL1-METRIC
PROJECT NUMBER	472-83685
DATE	Feb. 3, 2003
RB JOB	1520-1
SHEET	34 OF 92