FHWA REGION NO.	STATE	PROJECT NO.	YEAR	SHEET NO.	TOTAL SHEETS
7	KANSAS	81N-0080-01	1997	81	162

NOTES:
1) Temporary Slope Drain and Temporary Berm may be used on either project foreslopes or project backslopes.
2) Discharge of Slope Drains shall be into stablized ditch or area, or into Sediment Basin.
3) Pipe shall be secured in place as approved by Engineer.

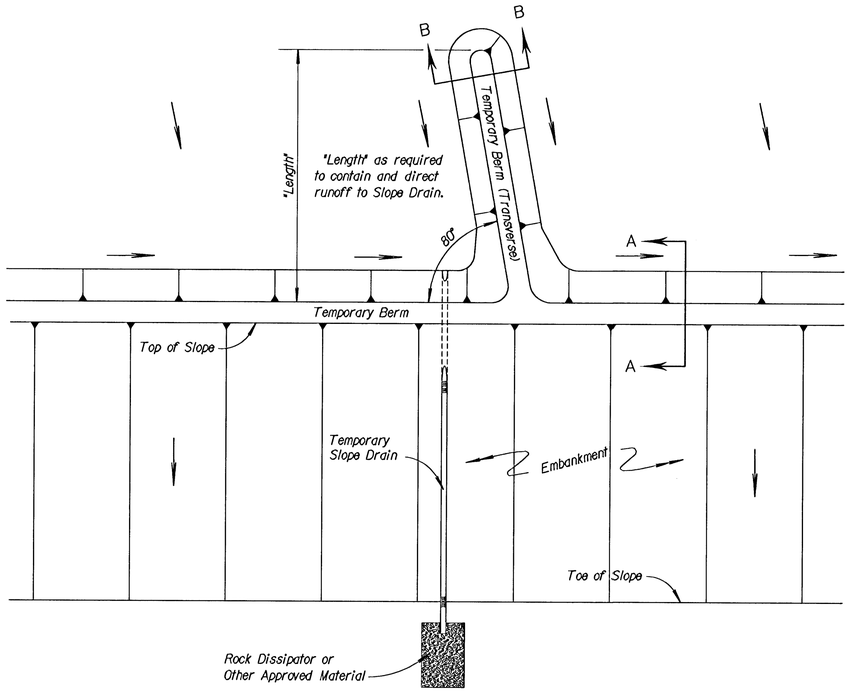

TYPICAL PLAN VIEW OF TEMPORARY BERM AND TEMPORARY SLOPE DRAIN

NO SCALE

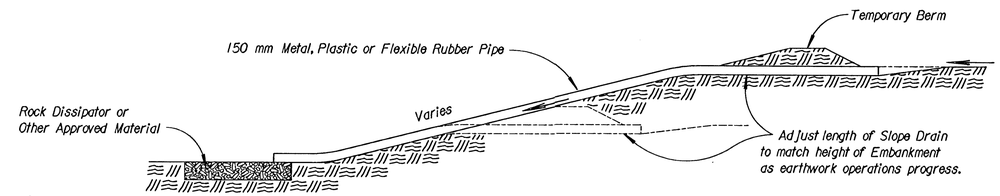

TYPICAL PROFILE OF TEMPORARY SLOPE DRAIN

NO SCALE

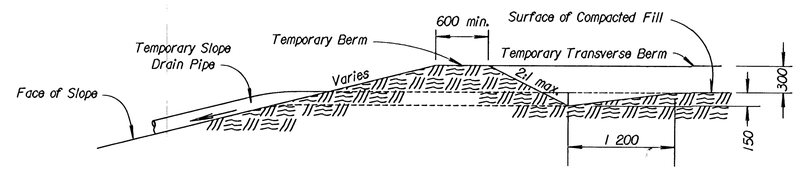

SECTION A-A

NO SCALE

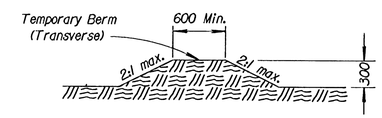

SECTION B-B

NO SCALE

TYPICAL PROFILE OF TEMPORARY BERM

NO SCALE

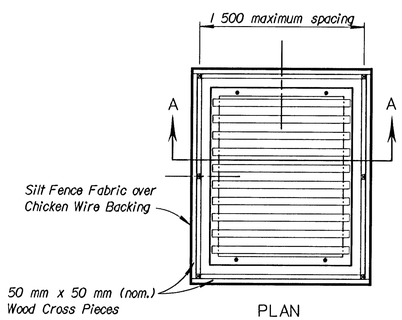

PLAN

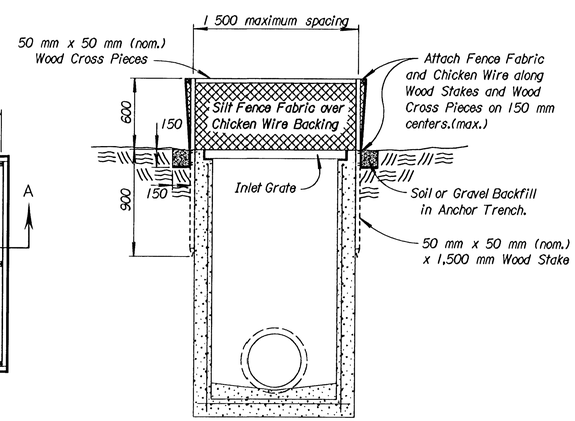

SECTION A-A

TEMPORARY INLET SEDIMENT BARRIER

NO SCALE

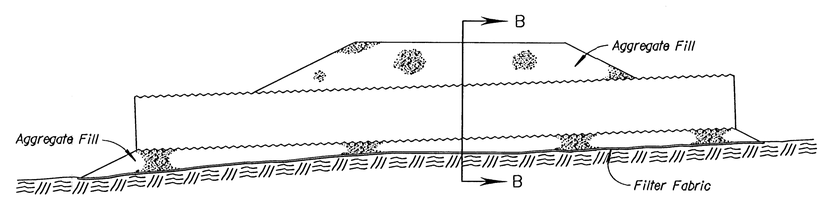

SECTION A-A

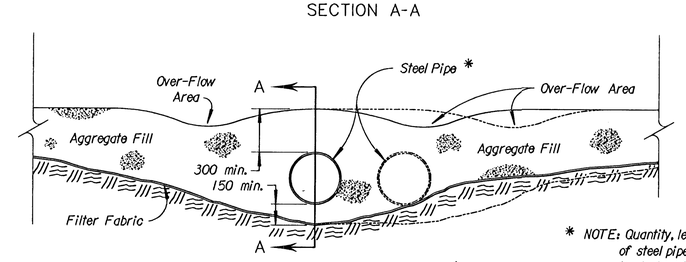

SECTION B-B

* NOTE: Quantity, length and diameter of steel pipe to be determined by design flow calculations.

TEMPORARY STREAM CROSSING

NO SCALE

NO.	DATE	REVISIONS	BY	APP'D
3				
2				
1	7-5-95	Convert to SI	WCL	RDR

KANSAS DEPARTMENT OF TRANSPORTATION

TEMPORARY PROJECT WATER POLLUTION CONTROL
TEMPORARY SLOPE DRAIN; STREAM CROSSING; INLET SEDIMENT BARRIER

LA852C SI

F.H.W.A. APPROVAL	8-8-95	APP'D	Richard D. Ross		
DESIGNED	WCL	DETAILED	WCL	QUANTITIES	TRACED DAK
DESIGN CK.	RDR	DETAIL CK.	WCL	QUAN.CK.	TRACE CK. WCL

Drawn By : $$USERNAME$$
DGN File : $$$$$$$$$$$$DGNSPEC$$$$$$$$$$$$$$$$
Plotted : $$$$$$$$$$$$ $$$$$$$$$$$$ View- PLOT 1