FHWA REGION NO.	STATE	PROJECT NO.	YEAR	SHEET NO.	TOTAL SHEETS
7	KANSAS	STP-N012 (901)	1999	48	131

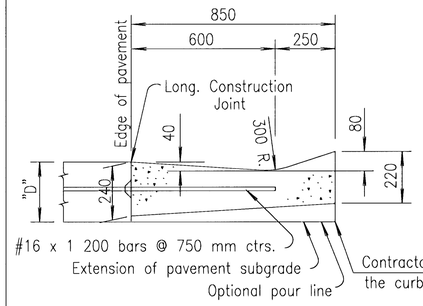

DETAIL OF GUTTER
(Normal section)

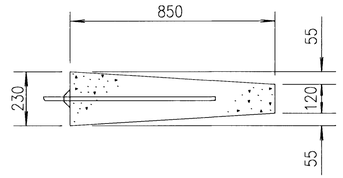

TAPERED GUTTER

Note: Concrete gutter contains 0.1633 m ³/m Class A Concrete (AE).

GUTTER

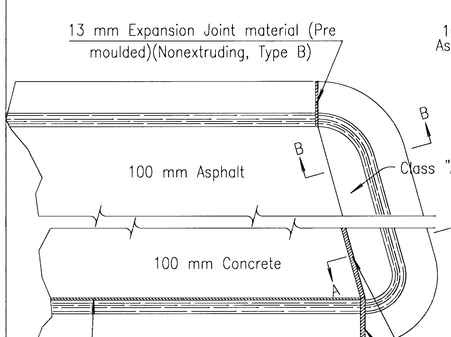

PLAN

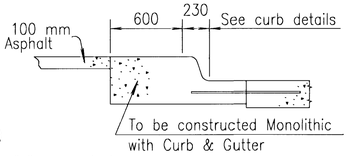

SECTION B–B

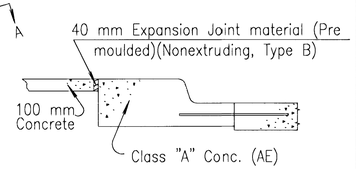

SECTION A–A

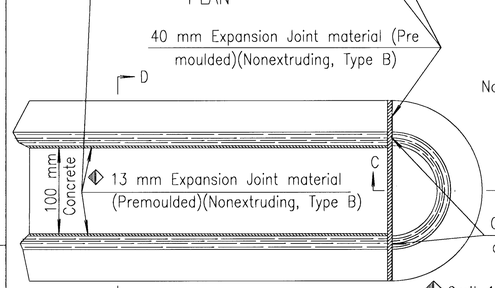

PLAN

Note: Additional Class "A" Conc.(AE) needed to complete median nose shall be subsidiary to the bid item Combined Curb & Gutter.

Omit 40 mm joint material between back of nose and asphalt filled median.

◆ Omit 13 mm Expansion joint material when asphalt is used in median.

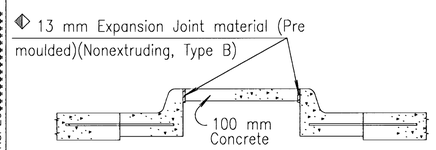

SECTION D–D

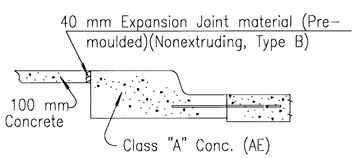

SECTION C–C

Note: Expansion joints shall be placed in concrete median as follows. In long runs expansion joints shall be 13 mm expansion joint material (Nonextruding, Type B) flush with the surface.
Expansion joints in the median shall match expansion joints in the curb and gutter with a maximum spacing of 38 m. Plane of weakness in median shall match plane of weakness in curb & gutter.

TYPICAL NOSE DETAILS FOR RAISED MEDIANS

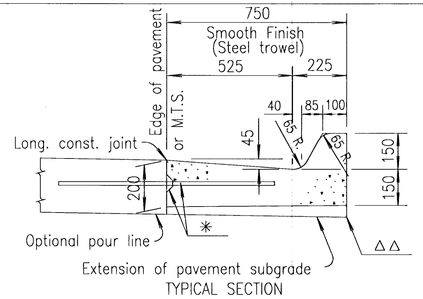

COMBINED CURB & GUTTER – TYPE I ⌶(750 mm WIDTH)

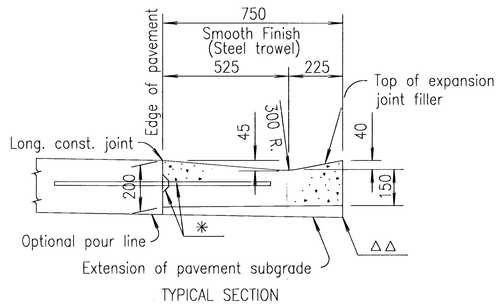

COMBINED CURB & GUTTER – TYPE II ⌶(750 mm WIDTH)

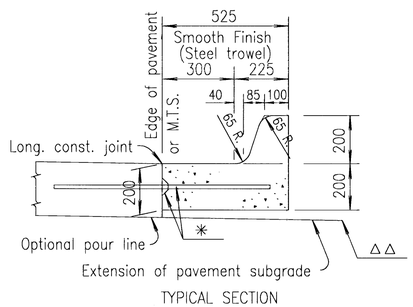

COMBINED CURB & GUTTER – TYPE III ⌶(525 mm WIDTH)

✳ Longitudinal construction joint and #16 x 900 mm bars @ 750 mm ctrs., where concrete pavement is constructed.

△△ Contractor has the option of thickening the curb and gutter as shown.

Note: Use Class "A" Concrete (AE) throughout.
All exposed edges shall be finished with an edging tool.
Place a 25 mm premoulded Expansion Joint Filler (nonextruding, Type B) at a spacing not to exceed 75 m.

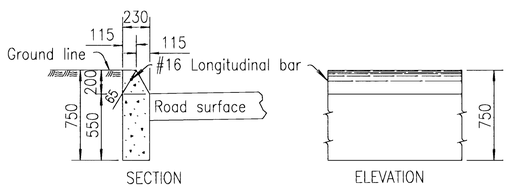

PROTECTION CURB 200 mm

GENERAL NOTE

Combined curb and gutter or gutter adjoining concrete pavement may, at the contractor's option, be poured either monolithically or separately, using either the mix used in the concrete pavement or Class "A" Concrete (AE). The combined curb and gutter or gutter shall have the same section as shown on the plans. If poured monolithically, dowel bars may be omitted from the combined curb and gutter or gutter, but the wire mesh shall be extended to 150 mm or less from the back of the curb or gutter. Pavement joints shall be continued through curb or gutter and no other planes of weakness will be required. Joints in the combined curb and gutter or gutter are to be filled with the same material as used for the pavement joints.

Expansion joints in the combined curb and gutter are to be placed opposite expansion joints in the pavement.

Where combined curb and gutter or gutter does not abut concrete pavement or concrete base course, omit tie bars and longitudinal construction joint and place a 25 mm premoulded Expansion Joint Filler (Nonextruding, Type B) cut to the dimensions of the combined curb and gutter or gutter, at a spacing not to exceed 75 m and at the ends of curb returns.

Where combined curb and gutter or gutter is adjacent to bituminous construction, planes of weakness shall be constructed at 6 m intervals.

A 1 200 mm length of transition from normal gutter section to the tapered gutter section shall be used at the ends of each run of gutter except where the gutter abuts a curb, such as at the end of a bridge. Inlets shall be located so as not to fall within this transition section.

Where pressure relief joint (Urethane Foam) is placed across the pavement, and gutter or curb and gutter is continued on for more than 3 m, use Type B, nonextruding, joint filler through gutter section, shaped to fit gutter or curb and gutter. Material may be solid Type B, approximately 100 mm thick, or other thickness pieces (Type B), bonded together with cold mastic or other material, as approved by the Engineer.

For expansion joint treatment where combined curb and gutter or gutter abuts a bridge wing on a U type abutment see bridge drawings.

Longitudinal joints shall be sawed and sealed with joint sealant. See Special Provisions for type.

"D"= Pavement thickness

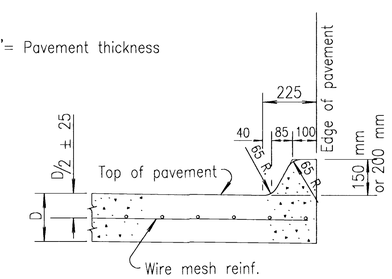

TYPICAL SECTION

150 mm OR 200 mm EDGE CURB
(MONOLITHIC)

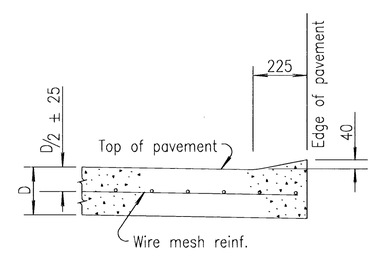

TYPICAL SECTION

40 mm EDGE CURB
(MONOLITHIC)

Note: Planes of weakness are to be constructed over the contraction joints in the concrete pavement.
A 25 mm premoulded Expansion Joint Filler (Nonextruding, Type B) cut to the dimensions of the Edge Curb shall be used over the expansion joints in the concrete pavement.

EDGE CURB

NO.	DATE	REVISIONS	BY	APP'D
3	12-16-97	Revised Protection Curb Width	R.J.S.	J.O.B.
2	1 -27-97	Revised Rebar Designation	R.J.S.	J.O.B.
1	12-4-94	Revised Joint Sealant	R.J.S.	J.O.B.

KANSAS DEPARTMENT OF TRANSPORTATION

CURB, GUTTER
AND
COMBINED CURB & GUTTER

RD740 SI SHEET 48 OF 131

FHWA APPROVAL	2-2-98	APP'D.	James O. Brewer		
DESIGNED	DETAILED	QUANTITIES		TRACED	Bowser
DESIGN CK.	DETAIL CK.	QUAN.CK.		TRACE CK.	Seitz

Sheet 45 of

Drawn By : $$USERNAME$$ Plotted : $$$$SYTIME$$$$$$
File : $$$$$$$$$$$$$$$$$$$$DGNSPEC$$$$$$$$$$$$$$$$$$$