FHWA REGION NO.	STATE	PROJECT NO.	YEAR	SHEET NO.	TOTAL SHEETS
7	KANSAS	87STP-N-0129-01	1999	62	131

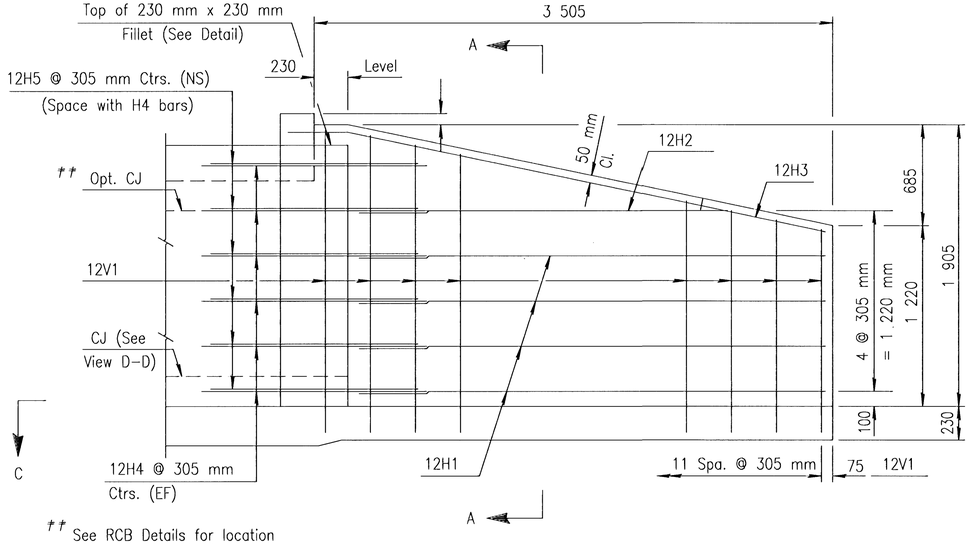

†† See RCB Details for location of construction joint.

ELEVATION OF WINGWALL

(Backface Shown)

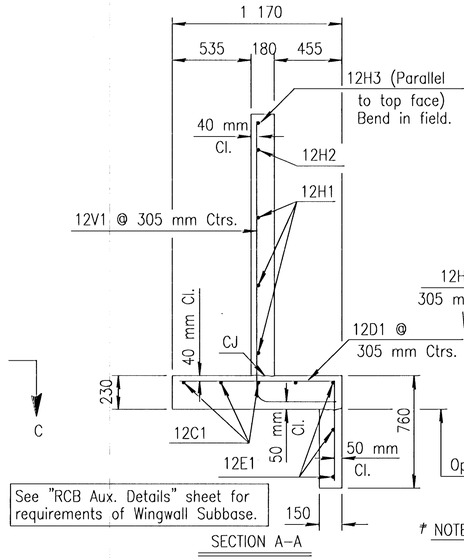

See "RCB Aux. Details" sheet for requirements of Wingwall Subbase.

SECTION A-A

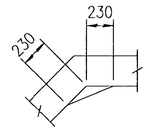

Fillet Detail

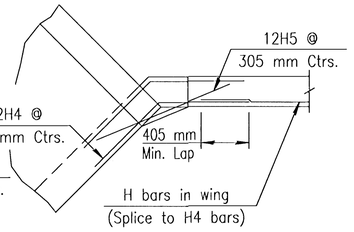

DETAIL OF 230 mm x 230 mm FILLET

(Plan View)

† NOTE: Const. Jt. may be used at Contractor's option when approved by the Engineer. D1 bars or mesh may be spliced thus: ⌐ Minimum overlap shall be 380 mm. No increase in quantities or cost shall be allowed when Contractor elects this option.

GENERAL NOTES

UNIT STRESSES: Class AAA Concrete; f'c = 28 MPa
Reinforcing Steel; fy = 420 MPa

CONCRETE: Class AAA Concrete shall be used throughout. Bevel all exposed edges with a 20 mm triangular moulding.

REINFORCING: All reinforcing shall conform to ASTM A616M-96, Grade 420. Welded Wire Fabric shall conform to ASTM A185M. All dimensions relative to reinforcing steel shall be to center-line of bar unless otherwise noted.

QUANTITIES: Wingwall Quantities include all quantities outside the neat lines of the box, excluding the hubguard.

APRON: A 125 mm concrete slab shall be constructed between the downstream wings in locations subject to scour only when specified on the plans or by the Engineer. Wire Reinforcing mesh shall be electrically welded and shall be composed of 150x150-MW10xMW10 welded wire fabric and shall be classified as kilograms of reinforcing.

FOUNDATION AND BACKFILL MATERIAL: Soils judged as high plasticity clays, fat clays, expansive clays, or organic clays are unsuitable for foundation and/or backfill material for wingwalls and will not be used. Where these conditions exist, Foundation Stabiliation and/or Granular Backfill (Wingwalls) shall be used as determined by the Engineer. See "RCB Auxiliary Details" sheet for additional details.

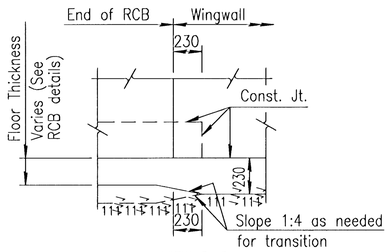

VIEW D-D

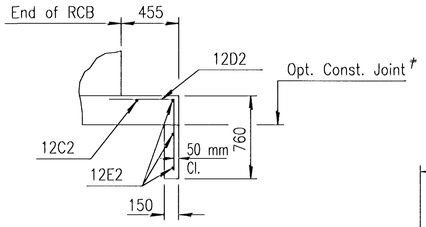

SECTION E-E

NOTE:
EF = Each Face
NS = Near Side
FS = Far Side
CJ = Const. Joint

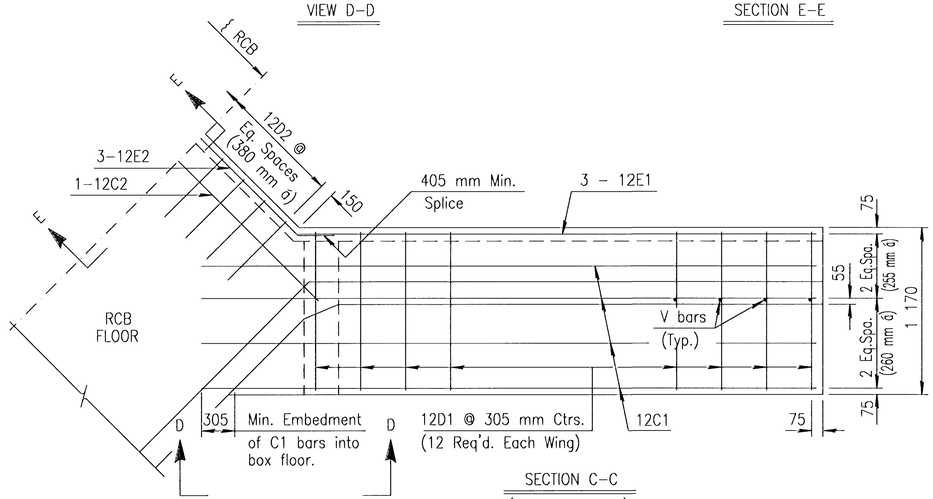

SECTION C-C

(Plan of Footing)

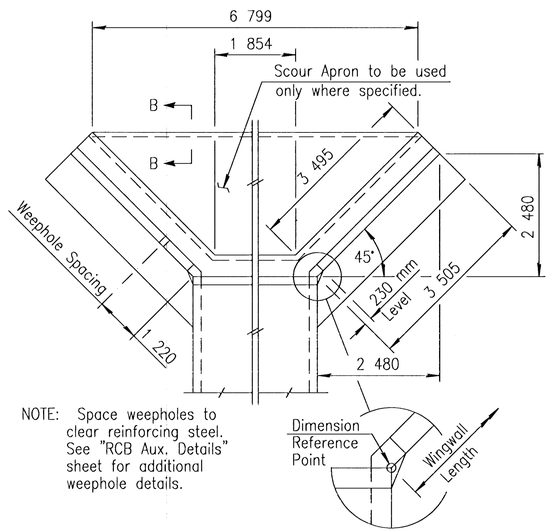

NOTE: Space weepholes to clear reinforcing steel. See "RCB Aux. Details" sheet for additional weephole details.

WING DIMENSIONS FOR NORMAL BOX

(1:3.5 Embankment Slope)

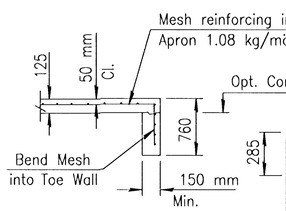

SECTION B-B

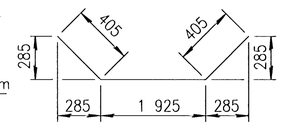

E2

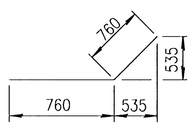

H4

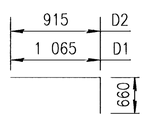

D1,D2

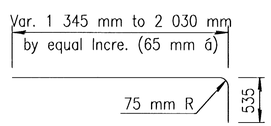

V1

(2 Req'd., each length)

BENDING DIAGRAM

(All dimensions are out to out of bars.)

Quantities listed below are included in the Summary of Quantities shown on the RCB details.

WINGWALL QUANTITIES (One End Only)	
Class AAA Concrete:	
Wingwalls	5.0 mø
Apron	2.0 mø
Soil Saver	0.0 mø
Reinforcing Steel	254 kg
Welded Wire Fabric	17 kg

NOTE: Reinforcing Bar List is for both wings at one end of box only.

* See Bending Diagram

		12C1	12D1	12E1	12C2	12D2	12E2	12V1	12H1	12H2	12H3	12H4	12H5
0° Skew	No.	8	24 *	6	1	5 *	3 *	24	8	2	2	24 *	12
	Length	4 265	1 725	3 430	2 640	1 575	2 735	*	3 150	2 540	3 760	1 520	1 065

NO.	DATE	REVISIONS	BY	APP'D

KANSAS DEPARTMENT OF TRANSPORTATION
Sta. 4+615.00

FLARED WINGWALLS
1.5 m Rise (0E SKEW)

BR 10.00.05 SI

FHWA APPROVAL	6-5-99	APP'D	KENNETH F. HURST
DESIGNED	DETAILED	QUANTITIES	TRACED
DESIGN CK.	DETAIL CK.	QUAN.CK.	TRACE CK.

62 OF 131

ORIG. FROM: BR.NO. DESIGN DETAIL QUANTITIES DRAWN TRACED PROJ. DESIGN DETAIL QUANTITIES DRAWN TRACED CO. CHECK DATE DATE DATE DATE DATE DATE DATE DATE DATE DATE DATE DATE

Drawn By : $$USERNAME$$
DGN File : $$$$$$$$$$$$$$$$DGNSPEC$$$$$$$$$$$$$$$$
Plotted : $$$$$$SYTIME$$$$$$ View= PLOT10

G:\CIVIL\PAW-KEBB\98171\DETAILS\BR10005.DNG Thu Jul 27 13:59:47 2000