FHWA REGION NO.	STATE	PROJECT NUMBER	FISCAL YEAR	SHEET NUMBER	TOTAL SHEETS
7	KANSAS	87N-0128-01		48	118

BY	DATE
REFERENCES NOTED	
REFERENCES CHECKED	

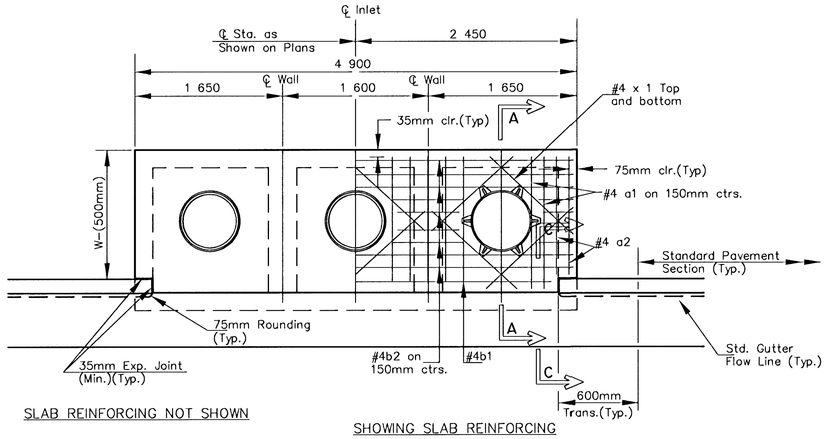

SLAB REINFORCING NOT SHOWN

SHOWING SLAB REINFORCING

PLAN

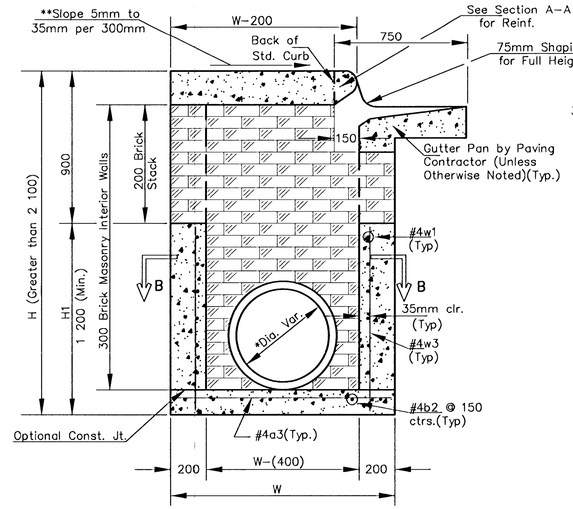

TYPPICAL INLET SECTION AT INTERIOR WALL
(Reinforced Concrete Walls)

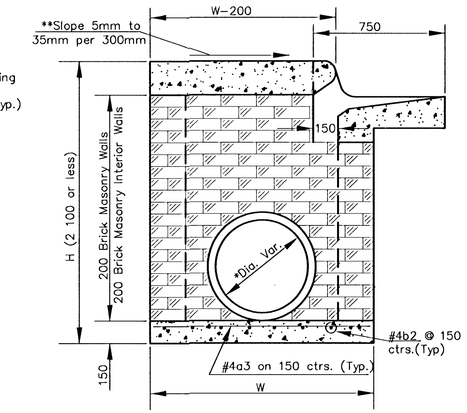

TYPPICAL INLET SECTION AT INTERIOR WALL
(Masonry Walls)

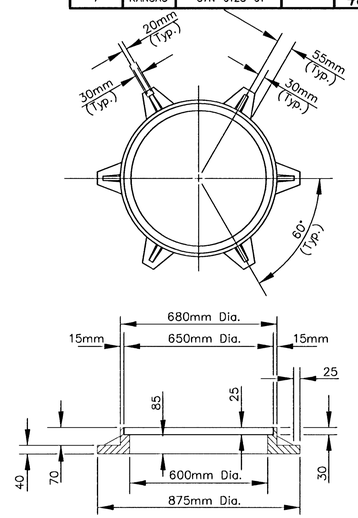

CAST IRON MANHOLE RING
Wt. 81.7 kg

See City of Wichita Standard Manhole Frame and Cover Detail Sheet for Cover Details to be used with Inlet Frame.

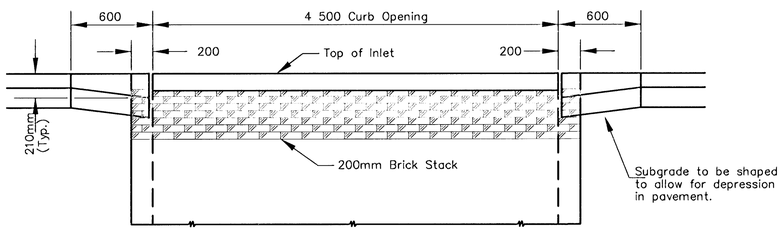

ELEVATION

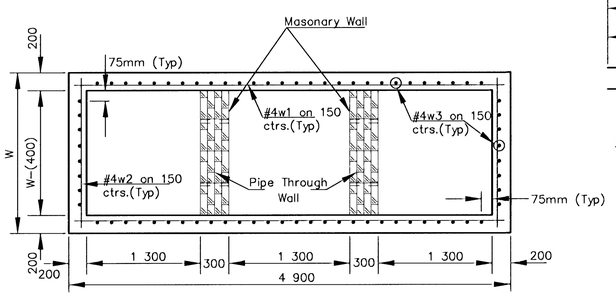

SECTION B-B

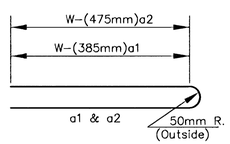

BENDING DIAGRAM

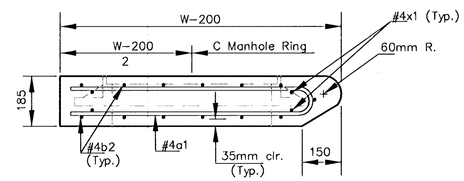

SECTION A-A

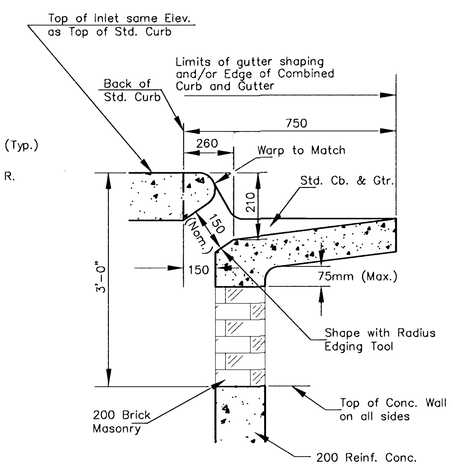

SECTION C-C

* An Interior Wall Opening shall be provided by means of a section of Reinforced Conc. Pipe. See CASE I and CASE II.

** Slope of Inlet Top to match Sidewalk or Parking Slope within the Limits indicated.

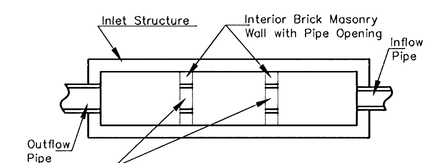

CASE I

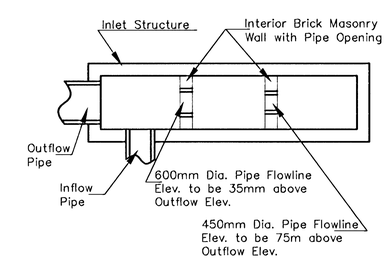

CASE II

NOTE: Interior Wall Pipe Size shall be as specified in the Inlet Construction Note on the Plan/ Profile Sheets for those Cases not shown here.

GENERAL NOTES

1. THE CONTRACTOR SHALL BE REQUIRED TO CONSTRUCT 200mm BRICK MASONRY WALLS BETWEEN THE CONCRETE INLET BASE AND TOP WHEN W = 1 900 OR LESS AND H = 2 100 OR LESS. WHEN 'W' IS GREATER THAN 1 900 AND 'H' IS LESS THAN 2 100, THE OUTSIDE INLET WALLS BELOW THE BRICK STACK SHALL BE REINFORCED CONCRETE CONSTRUCTION.
2. INLET INVERT SHALL BE SHAPED WITH 8 SACK SAND MIX CONCRETE TO CREATE FLOW CHANNELS AND TO INCREASE HYDRAULIC EFFICIENCY SUCH THAT THE THE INLET WILL BE SELF CLEANING BETWEEN ALL INLET AND/OR OUTLET PIPES.
3. CONCRETE SHALL BE C.O.W. STANDARD PAVING MIX. ALL EXPOSED EDGES SHALL BE FINISHED WITH AN EDGING TOOL. REINFORCING BARS SHALL BE FIELD BENT OR CUT TO CLEAR PIPES AND INLET RING. ALL BARS ARE #4 BARS AT 150mm SPACING AND SHALL HAVE A MINIMUM CLEARENCE OF 35mm UNLESS OTHERWISE NOTED.
4. CONCRETE TOPS TO BE INSTALLED ON THIN MORTAR CUSHION TO INSURE FULL SUPPORT ALONG BRICK WALLS. CONCRETE TOPS MAY BE CAST IN PLACE OR PRECAST.
5. THE ENDS OF ALL PIPES INSTALLED IN INLETS SHALL BE CUT OFF FLUSH WITH THE INSIDE FACE OF THE INLET WALL.

PRECAST SLAB AND FLOOR REINFORCING

		W=4'-4"		W=5'-4"		W=6'-4"		W=7'-4"		W=8'-4"	
Mark	Size	No.	Length	No.	Length	No.	Length	No.	Length	No.	Length
?a1	#4	20	1 975	20	2 575	20	3 175	20	3 775	20	4 375
a2	#4	4	1 800	4	2 400	4	3 000	4	3 600	4	4 200
a3	#4	33	1 225	33	1 525	33	1 825	33	2 125	33	2 425
b1	#4	1	4 425	1	4 425	1	4 425	1	4 425	1	4 425
?b2	#4	23	4 825	29	4 825	35	4 825	41	4 825	47	4 825
x1	#4	24	1 150	24	1 250	24	1 350	24	1 450	24	1 550

WALL REINFORCING

		W=4'-4"		W=5'-4"		W=6'-4"		W=7'-4"		W=8'-4"	
Mark	Size	No.	Length	No.	Length	No.	Length	No.	Length	No.	Length
w1	#4	①	4 825	①	4 825	①	4 825	①	4 825	①	4 825
w2	#4	①	1 225	①	1 525	①	1 825	①	2 125	①	2 425
w3	#4	72	②	76	②	80	②	84	②	88	②

? Field bend or cut Reinforcing as required for clearance.
① 4(HI-300mm); (HI-300mm) Round down to nearest 150mm
② HI-75mm

STANDARD CURB INLET PRECAST TOPS

W	PRE-CAST TOP SIZE	SIDE OF INTERIOR WALL PIPE SIZE	CU. YD. CONC.
1 300	1 100 x 4 900 x 190	525mm & SMALLER	1.20±
1 600	1 400 x 4 900 x 190	600mm & 750mm	1.58±
1 900	1 700 x 4 900 x 190	900mm & 1050mm	1.95±
2 200	2 000 x 4 900 x 190	1200mm & 1350mm	2.33±
2 500	2 300 x 4 900 x 190	1500mm & 1650mm	2.70±

STANDARD TYPE 1 CURB INLET
OPENING = 150mm X 4500mm

SRB
924 NORTH MAIN
WICHITA, KANSAS 67203
http://www.feist.com/~srb
316-264-8008
FAX 264-4821
E-Mail: srb@feist.com
SAVOY, RUGGLES & BOHM, P.A.
ENGINEERING & SURVEYING

PROJECT NUMBER
472-76-245-83057-000-000-001

DRAWN	DESIGN	REVIEW	DATE	UTILITY	SRB JOB
S.R.B.	C.O.W.		Dec. 13, 2000		-

REVISED

Copy to Lee Gaston Jr.

48
118