FHWA REGION NO.	STATE	PROJECT NUMBER	FISCAL YEAR	SHEET NUMBER	TOTAL SHEETS
7	KANSAS	87N-0128-01	.	59	118

MANHOLE FRAME AND COVER DETAIL

ADOPTED AS STANDARD DESIGN BY CITY OF WICHITA, KANSAS

MANHOLE COVER
WEIGHT = 82 Kg

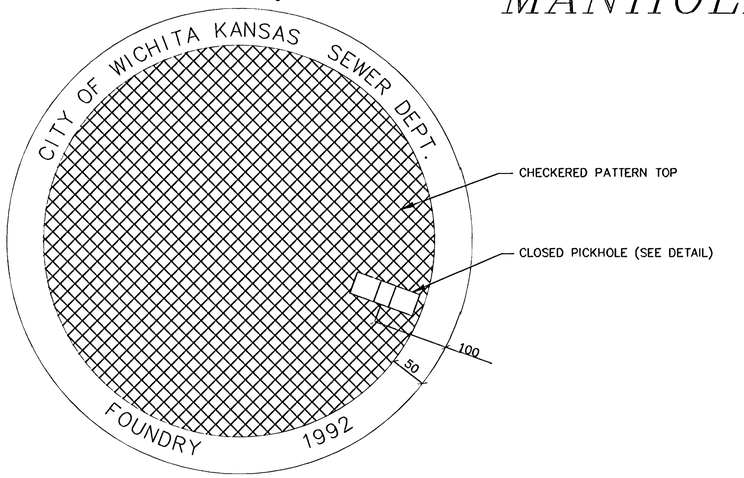

TOP VIEW

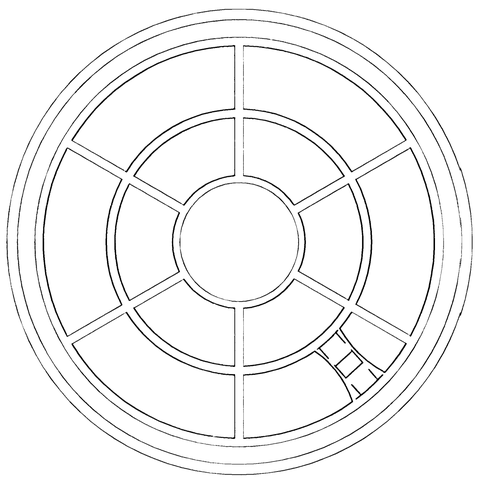

BOTTOM VIEW

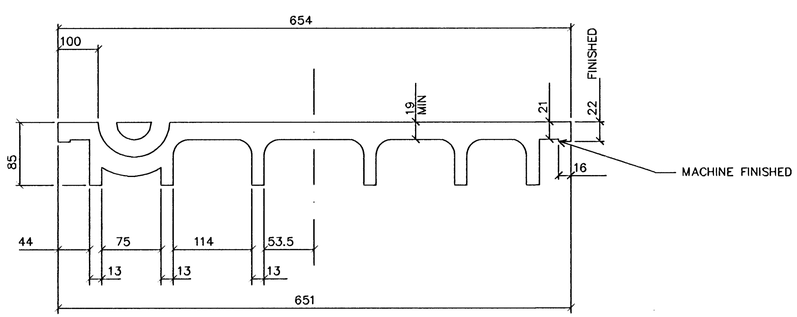

MANHOLE FRAME
WEIGHT = 109 Kg

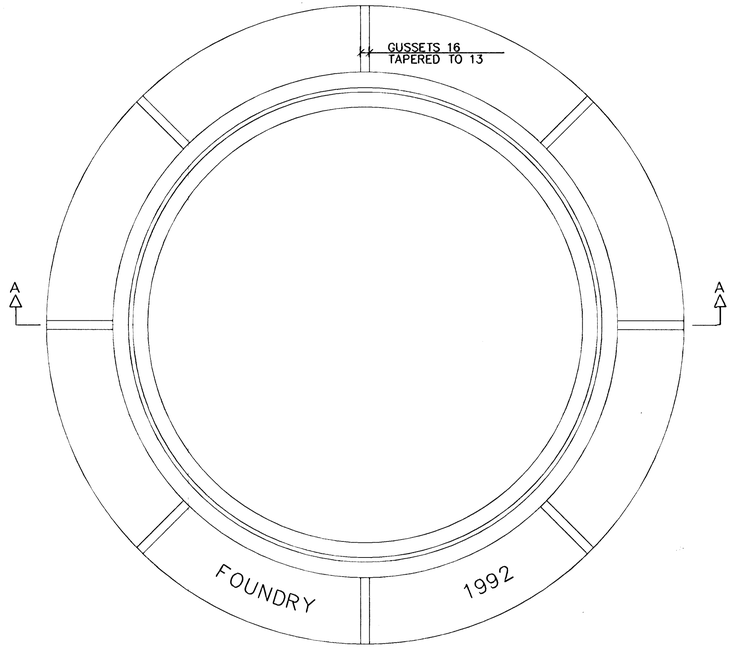

TOP VIEW

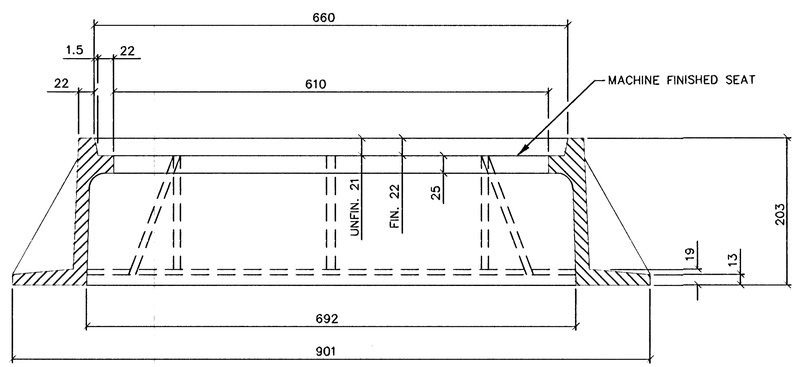

SECTION A – A

GENERAL NOTES

MANHOLE CASTINGS SHALL BE MANUFACTURED USING GOOD QUALITY GRAY IRON CONFORMING TO CLASS 30 OF A.S.T.M. DESIGNATION A–48. DIMENSIONS AND WEIGHTS SHOWN ON THE DETAILED DRAWINGS SHALL BE CONSIDERED AS MINIMUM REQUIREMENTS AND ANY DEVIATIONS FROM TH DIMENSIONS SHOWN MUST BE SPECIFICALLY APPROVED. THE FINISHED CASTINGS SHALL BE OF UNIFORM QUALITY, FREE FROM BLOWHOLES, POROSITY, HARD SPOTS, SHRINKAGE DISTORTIONS OR OTHER DEFECTS.

MANHOLE CASTINGS SHALL BE MANUFACTURED SUCH THAT A COVER MANUFACTURED BY ANY ONE FOUNDARY WILL FIT INTERCHANGEABLY INTO A FRAME MANUFACTURED BY ANOTHER FOUNDRY AND STILL MEET ALLOWABLE CLEARANCES AND NON–ROCKING REQUIREMENTS. THIS WILL REQUIRE MANUFACTURING OF THE MATCHING FACES ON THE COVER AND THE FRAME TO CLOSE TOLERANCES.

THE OUTSIDE CIRCUMFERENCE OF THE VERTICAL FACE OF THE COVER AND THE INSIDE CIRCUMFERENCE OF THE VERTICAL FACE IN THE FRAME RECESS SHALL BE MANUFACTURED TO TOLERANCES SUCH THAT THE CLEARANCE BETWEEN THE COVER AND FRAME WILL NOT EXCEED 3 mm AT ANY POINT AROUND THE CIRCUMFERENCE OF THE COVER. THE SEATING SURFACES BETWEEN THE COVER AND FRAME SHALL BE MACHINED SUCH AS THESE SURFACES SHALL MAKE FULL CONTACT FOR THEIR FULL CIRCUMFERENCE TO PRECLUDE THE COVER FROM ROCKING IN THE FRAME.

THE MANHOLE FRAME AND COVER SHALL BE MARKED WITH LETTERING INDICATING THE NAME OF THE MANUFACTURER AND THE YEAR WHEN THE COVER OR FRAME WAS CAST. THE COVER SHALL BE FURTHER IDENTIFIED WITH REGARDS TO OWNERSHIP USING LETTERS AT LEAST 25 mm IN HEIGHT. THIS IDENTIFICATION SHALL BE "CITY OF WICHITA SEWER DEPARTMENT". THE WORD DEPARTMENT MAY BE ABBREVIATED. THE TEXTURE OF THE TOP SURFACE OF THE COVER SHALL BE MANUFACTURED IN A CHECKERED PATTERN DESIGN AS INDICATED ON THE DRAWINGS. SMOOTH BLOCKOUTS SHALL BE UTILIZED TO HIGHLIGHT THE LETTERING ON THE COVER SURFACE. THE TOTAL AREA OF SMOOTH SURFACE BLOCKOUT SHALL NOT EXCEED THE AREA AS INDICATED ON THE DRAWING. POSITIONING OF SMOOTH BLOCKOUTS AND LETTERING MAY VARY FROM THAT SHOWN ON THE DETAILED DRAWING.

MANHOLE CASTINGS SHALL WEIGH A MINIMUM OF 82 Kg ON THE SOLID COVER AND 109 Kg ON THE MANHOLE RING. THIS IS A TOTAL OF 191 Kg ON A RING AND COVER SET. CASTINGS WEIGHTING LESS THAN THE MINIMUM SPECIFICATIONS WILL NOT BE ACCEPTED.

TO INSURE CONFORMANCE TO TENSILE STRENGTH REQUIREMENTS ALL CASTINGS SHALL BE JULIAN HEAT DATED WITH THE FOLLOWING REQUIREMENTS:

TWO TEST BAR SPECIMENS MUST BE POURED WHEN PRODUCING CITY OF WICHITA CASTINGS. ONE OF THE TEST BAR SPECIMENS SHALL BE SENT TO AN INDEPENDENT LABORATORY FOR TENSILE STRENGTH VERIFICATION TESTING. A TEST REPORT SHALL ACCOMPANY EACH SHIPMENT OF CASTINGS. THE HEAT DATE(S) ON THE CASTINGS SHALL RESPOND TO THE TENSILE STRENGTH (S). THE TEST REPORT WILL BE PAID FOR BY THE SUPPLIER. THE REMAINING TEST BAR SPECIMEN SILL BE SHIPPED TO SEWER MAINTENANCE AT 715 W. HARRY, WICHITA, KANSAS 67213.

PICKHOLE DETAIL

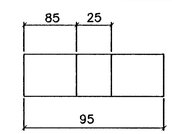

TOP VIEW

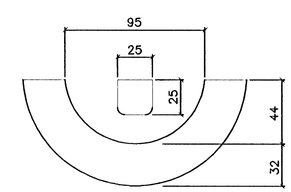

SECTION VIEW

THE CITY OF WICHITA

CITY ENGINEER'S OFFICE
CITY HALL – SEVENTH FLOOR
455 NORTH MAIN STREET
WICHITA, KANSAS 67202
(316) 268-4501
(316) 268-8116 FAX

MANHOLE FRAME AND COVER

M. E. LINDEBAK P.E. – CITY ENGINEER

PROJECT NUMBER	OCA #
472-83057	

DATE	SHEET
MAR 96	SHEET 59 OF 118