FHWA REG NO.	STATE	PROJECT NO.	YEAR	SHEET NO	TOTAL SHEETS
7	Kansas	87N-0195-01	2001	39	127

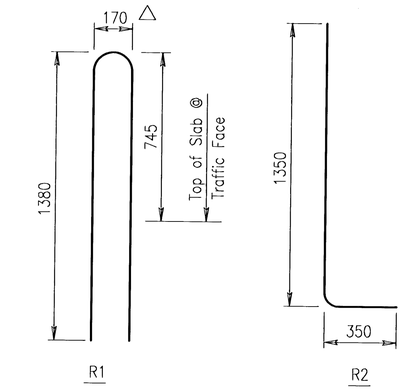

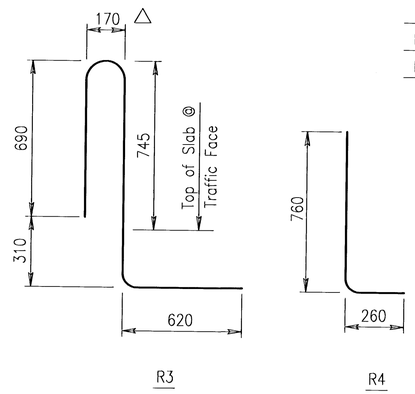

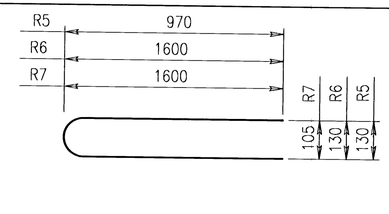

Non-Epoxy - Grade 420								
	Straight Bars				Bent Bars			
	Mark	Size	Number	Length	Mark	Size	Number	Length
Substructure	PW4	19	4	14 300	PW3	13	82	1350
					PW5	13	40	1550
	PW1	13	168	3400				
	PW2	13	36	14 300	PW6	10	78	680

⊗ See Bending Diagram

△ Nonstandard Hook Plus 0, Minus 10 mm.

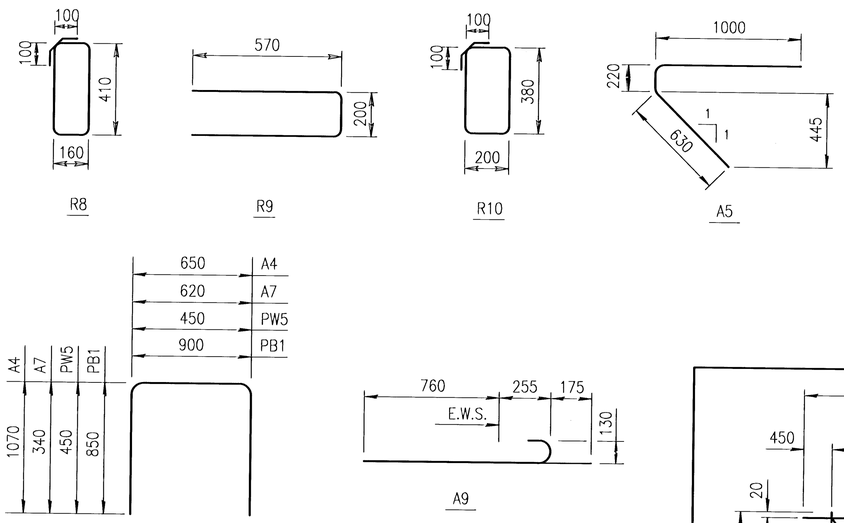

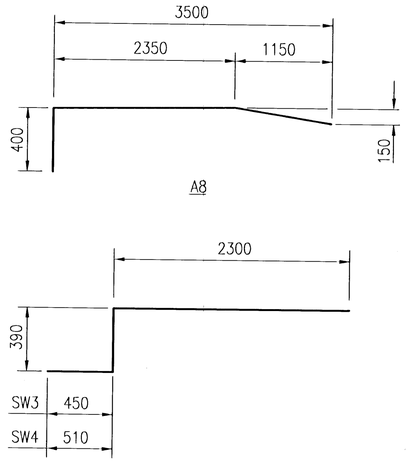

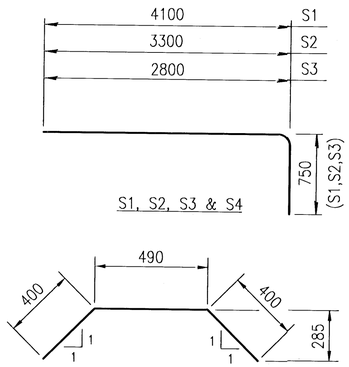

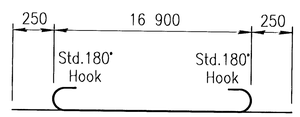

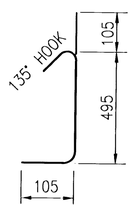

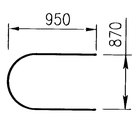

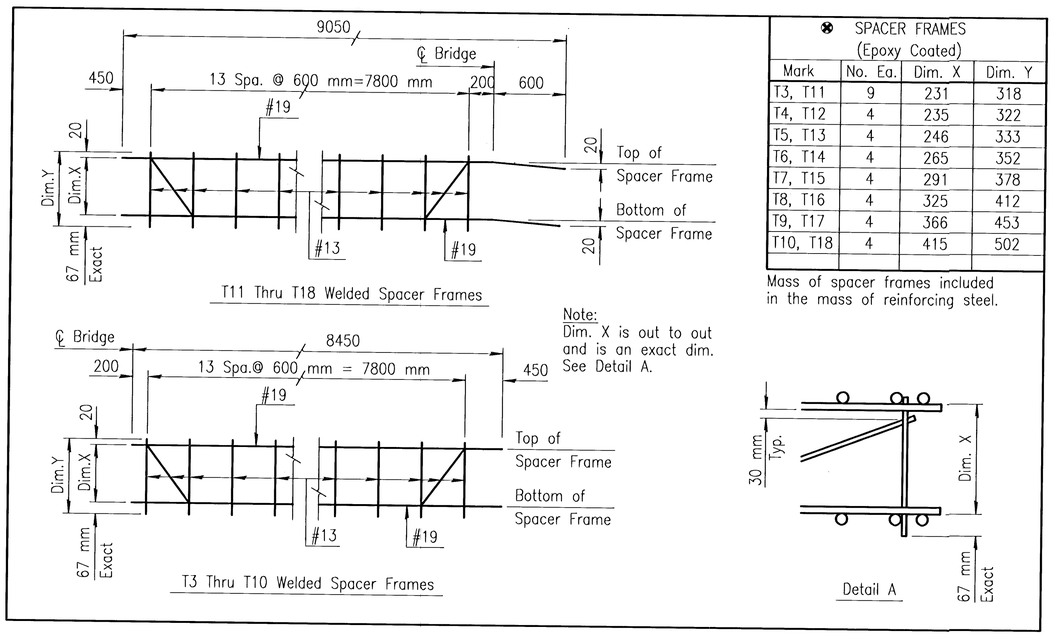

Note:
Dim. X is out to out and is an exact dim. See Detail A.

⊗ SPACER FRAMES (Epoxy Coated)			
Mark	No. Ea.	Dim. X	Dim. Y
T3, T11	9	231	318
T4, T12	4	235	322
T5, T13	4	246	333
T6, T14	4	265	352
T7, T15	4	291	378
T8, T16	4	325	412
T9, T17	4	366	453
T10, T18	4	415	502

Mass of spacer frames included in the mass of reinforcing steel.

BENDING DIAGRAMS

(All dimensions are out to out of bars.)

BILL OF REINFORCING STEEL Epoxy Coated - Grade 420								
	Straight Bars				Bent Bars			
	Mark	Size	Number	Length	Mark	Size	Number	Length
Superstructure / Abutment - Deck - Rail - Pier Beam	S4	32	80	16 900	S1	25	80	4850
	S5	32	72	9500	S2	25	72	4050
	S7	32	64	12 600				
	S8	32	56	9500	PB3	22	10	17 400
	S13	32	32	16 600	R1	22	24	2830
					R2	22	4	1700
	S6	29	76	4300	R3	22	220	2380
	S9	29	52	7200	S3	22	76	3550
	S10	29	56	5100				
	S14	29	28	9600				
	S15	29	26	8400	A8	16	16	3910
	S16	29	28	6000	A9	16	140	1190
					PB7	16	4	2370
	A1	25	16	18 280	R5	16	8	1990
	A2	25	16	6130	R6	16	8	3250
					SW3	16	488	3140
	R11	19	24	1470	SW4	16	40	3200
	R12	19	144	2900				
	A10	19	20	900	A4	13	312	2790
					A5	13	140	1850
	A3	16	40	12 000	A7	13	28	1300
	PB2	16	24	16 900	PB1	13	172	2600
	PB4	16	4	16 200	R4	13	220	1020
	PB5	16	4	16 060	R7	13	4	3240
	PB6	16	4	15 300	SW5	13	20	1290
	SW1	16	60	8700				
	SW2	16	40	8300	R8	10	372	1340
	T1	16	110	16 900	R9	10	104	1340
					R10	10	52	1360
	S11	13	56	3600				
	S12	13	56	4000	T3-T18			⊗
	A6	13	2	16 900				
	A10	13	4	2000				
	C1	13	12	8700				
	C2	13	8	8300				
	SC1	13	78	2000				
	T2	13	78	16 900				

SRB 924 NORTH MAIN WICHITA, KANSAS 67203 316-264-8008 FAX 264-4621
SAVOY, RUGGLES & BOHM, P.A.
ENGINEERING & SURVEYING

MKEC ENGINEERING CONSULTANTS
411 N. WEBB ROAD
WICHITA, KS. 67206
316-684-9600

PROJECT NAME: MAPLE STREET BRIDGE (OVER CALFSKIN CREEK)

SHEET TITLE: BILL OF REINFORCING STEEL AND BENDING DIAGRAMS

DESIGN BY:	DRAWN BY:	CHECKED BY:
MDK	DPG	KJS

DATE	DRAWING NAME	SHEET / OF
NOVEMBER 2001	00142REN	39 / 127

H:\CIVIL\00142\BRIDGE\00142REN.DWG Wed Nov 21 14:21:48 2001
H:\CIVIL\00142\BRIDGE\00142REN.DWG