FHWA REG NO.	STATE	PROJECT NO.	YEAR	SHEET NO	TOTAL SHEETS
7	Kansas	87N-0195-01	01	44A	127

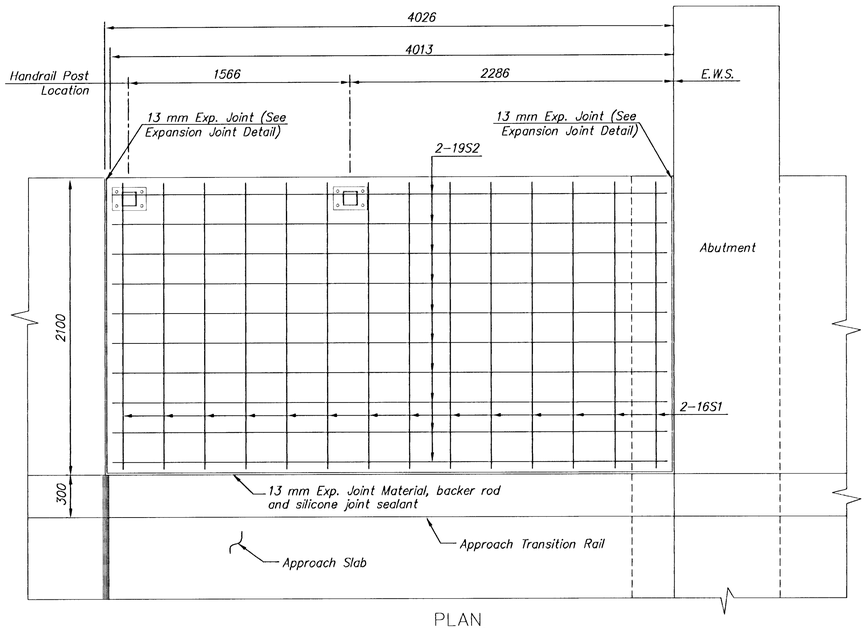

PLAN

(Northwest quadrant shown, Southwest quadrant similar)

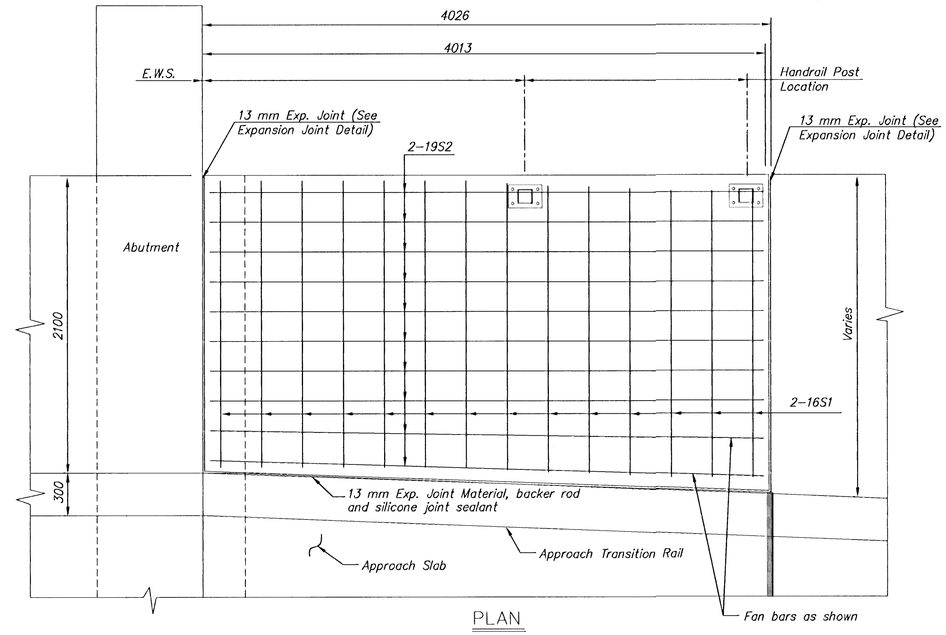

PLAN

(Northeast quadrant shown, Southeast quadrant similar)

GENERAL NOTES

CONCRETE: Concrete Class A (AE) shall be used throughout.

REINFORCING STEEL: All reinforcing steel dimensions are to the centerline of bars unless otherwise noted. All reinforcing steel shall conform to the requirements of ASTM A615M-96, Grade 420. Reinforcing steel may be moved slightly to avoid conflict with anchor bolts.

ANCHOR BOLTS: Anchor bolts shall be Hilti HVA HAS 304SS adhesive anchors or equal. Minimum embendment is 108 mm.

FOUNDATION STABILIZATION: Material for foundation stabilization shall be clean sand or UD-1. This material shall be subsidiary to the other items of the contract.

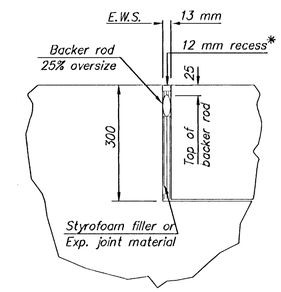

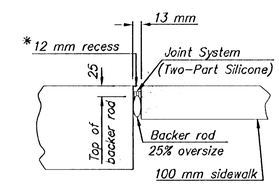

EXPANSION JOINT DETAIL

*Note: Joint shall be recessed 12 mm in areas subject to traffic. Maintain 12 mm depth of silicone joint sealant.

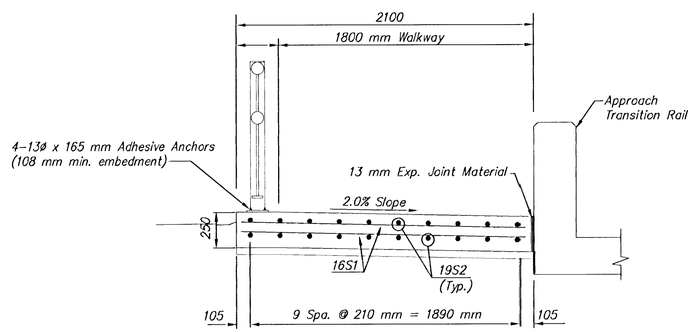

TYPICAL TRANSVESE SECTION

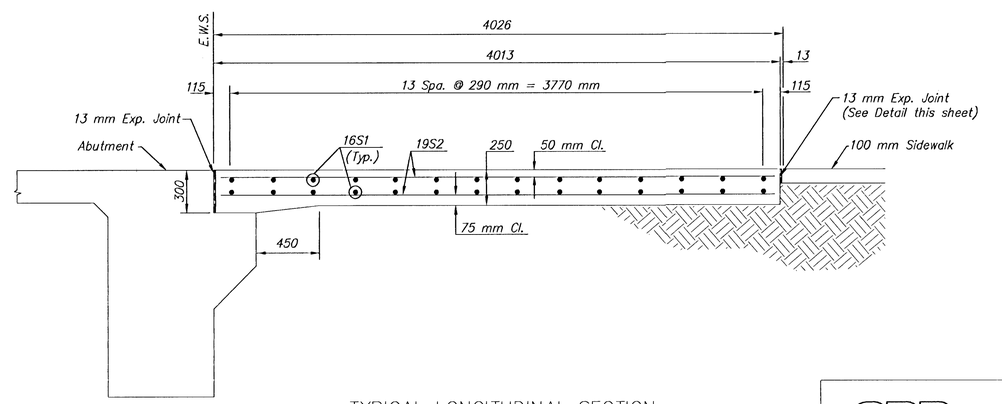

TYPICAL LONGITUDINAL SECTION

BAR SCHEDULE			
Mark	Size	Number	Length (mm)
S1	16	28	2020
S2	19	20	3920

Quantities shown are for one walk panel. Four panels required.

SRB 924 NORTH MAIN WICHITA, KANSAS 67203 316-264-8008 FAX 264-4621

SAVOY, RUGGLES & BOHM, P.A.
ENGINEERING & SURVEYING

MKEC ENGINEERING CONSULTANTS
411 N. WEBB ROAD
WICHITA, KS. 67206
316-684-9600

MAPLE STREET BRIDGE (OVER CALFSKIN CREEK)
PROJECT NAME

APPROACH SLAB SIDEWALK
SHEET TITLE

MDK	DPG	
DESIGN BY:	DRAWN BY:	CHECKED BY:
MAY 2001	00142GEN	44A / 127
DATE	DRAWING NAME	SHEET / OF

H:\CIVIL\00142\00142GEN