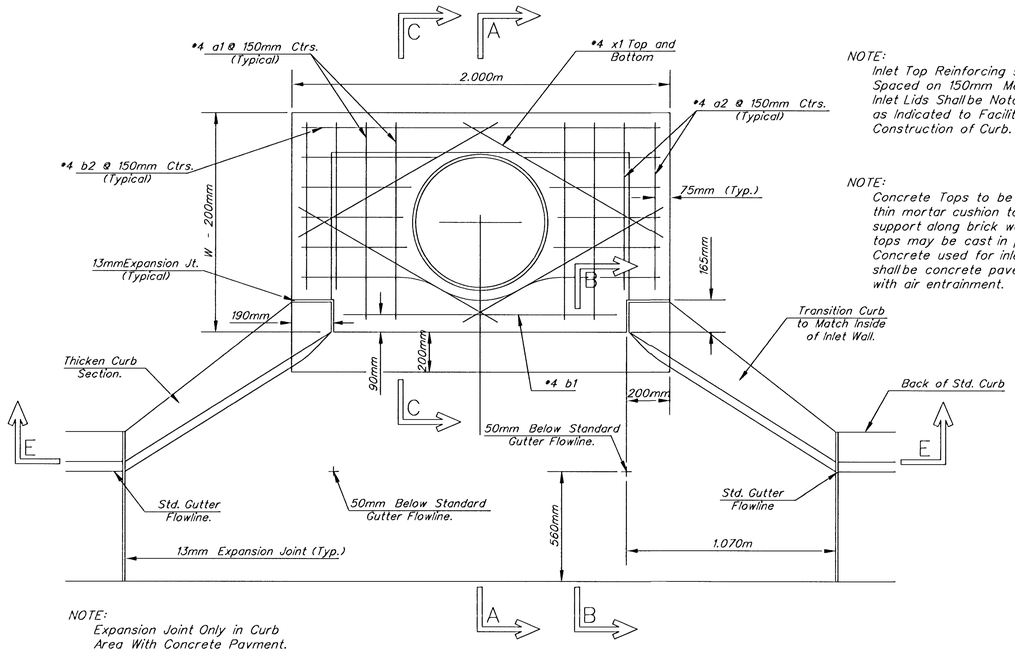

NOTE:
Expansion Joint Only in Curb Area With Concrete Pavment.

NOTE:
Inlet Top Reinforcing shall be Spaced on 150mm Max. Centers. Inlet Lids Shall be Notched Out as Indicated to Facilitate Construction of Curb.

NOTE:
Concrete Tops to be installed on thin mortar cushion to insure full support along brick walls. Concrete tops may be cast in place or precast. Concrete used for inlet construction shall be concrete pavement mix with air entrainment.

PLAN

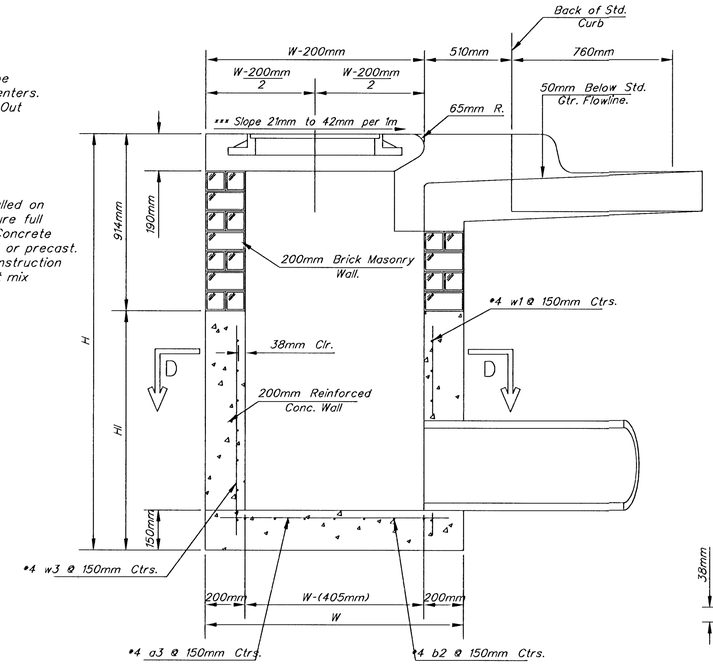

SECTION A-A

***NOTE: Slope of Inlet tops to Match Sidewalk or Parking Slopes within Limits Indicated.

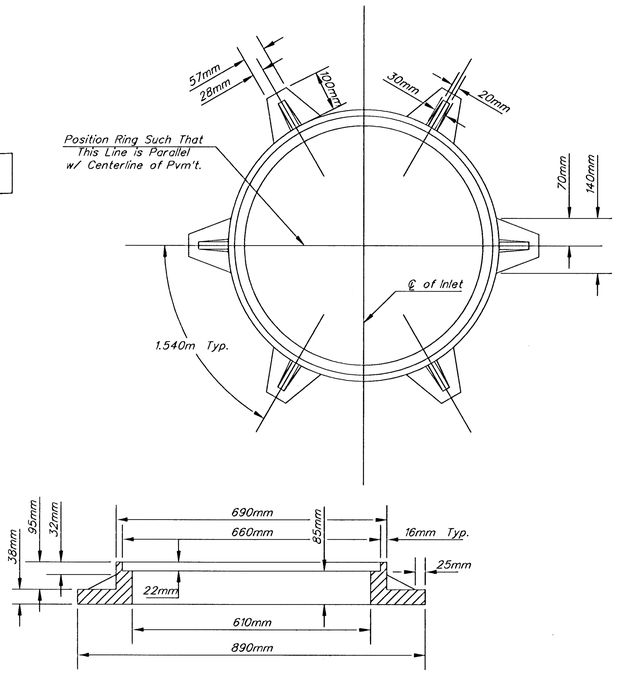

MANHOLE RING AND COVER

Weight - 82Kg.

*See City of Wichita Standard Manhole Ring and Cover Detail Sheet for Cover Details to Be Used With Inlet Frame.

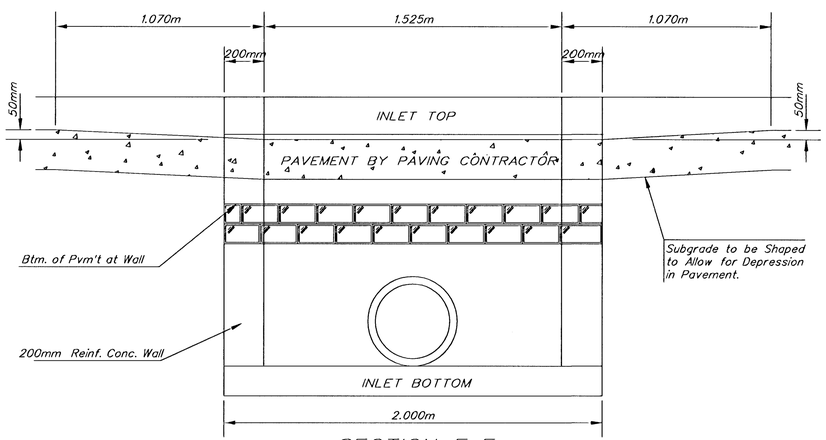

SECTION E-E

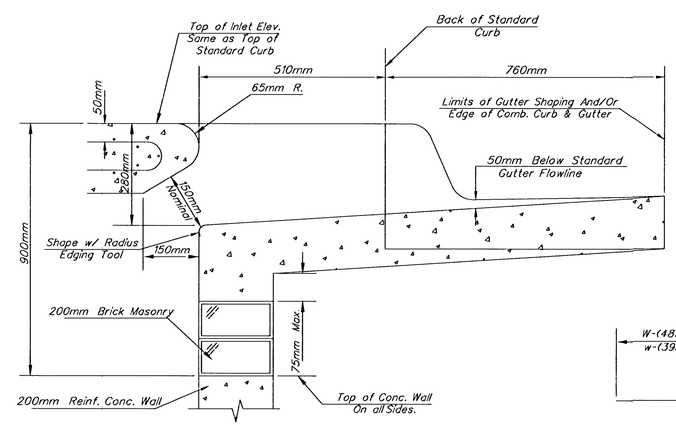

SECTION B-B

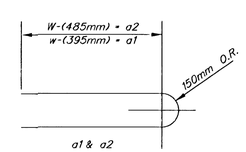

BENDING DIAGRAM

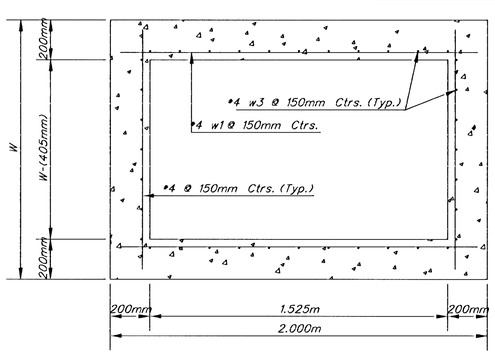

SECTION D-D

NOTE: Contractor shall have the option of constructing 200MM brick masonry walls between the concrete inlet base and top on this inlet when W=1.930M and H=2.135M or less.

Additional curb and gutter construction necessary to connect set-back inlet to pavement will be paid for at the unit price bid for each inlet hookup.

Inlet invert shall be shaped with 8 sack sand mix concrete to create flow channels and to increase hydraulic efficiency such that the inlet will be self-cleaning between all inlet and/or outlet pipes.

The ends of all pipes installed in inlets shall be cut off flush with the inside face of the inlet wall

PRECAST SLAB AND FLOOR REINFORCING											
		W - 1.320M		W - 1.625M		W - 1.930M		W - 2.235M		W - 2.540M	
MARK	SIZE	NO.	LENGTH	NO.	LENGTH	NO.	LENGTH	NO.	LENGTH	NO.	LENGTH
* a1	#4	6	2.000M	6	2.620M	6	3.225M	6	3.835M	6	4.445M
a2	#4	4	1.830M	4	2.440M	4	3.050M	4	3.660M	4	4.270M
a3	#4	13	1.245M	13	1.550M	13	1.855M	13	2.160M	13	2.465M
b1	#4	1	1.450M	1	1.450M	1	1.450M	1	1.450M	1	1.450M
* b2	#4	23	1.855M	29	1.855M	35	1.855M	41	1.855M	47	1.855M
x1	#4	8	1.170M	8	1.270M	8	1.370M	8	1.475M	8	1.575M
WALL REINFORCING											
		W - 1.320M		W - 1.625M		W - 1.930M		W - 2.235M"		W - 2.540M	
MARK	SIZE	NO.	LENGTH	NO.	LENGTH	NO.	LENGTH	NO.	LENGTH	NO.	LENGTH
w1	#4	①	1.855M	①	1.855M	①	1.855M	①	1.855M	①	1.855M
w2	#4	①	1.245M	①	1.550M	①	1.855M	①	2.160M	①	2.465M
w3	#4	32	②	36	②	40	②	44	②	48	②

* Field Bend or Cut Reinforcing as Required for Clearance.

① (Hl - 305MM) (Hl - 535MM) Rounded down to nearest 150MM

② Hl - 75MM

STANDARD CURB INLET PRECAST TOPS			
W	PRE-CAST TOP SIZE	PIPE SIZE	Cu.M.CONC.
1.320m	1.120m 1.930m 2.290m	535mm" & SMALLER	0.290
1.625m	1.422m 1.930m 2.290m	600mm & 790mm	0.390
1.930m	1.727m 1.930m 2.290m	900mm & 1050mm	0.490
2.235m	2.032m 1.930m 2.290m	1250mm & 1375mm	0.590
2.540m	2.337m 1.930m 2.290m	1525mm & 1675mm	0.690

THE CITY OF WICHITA

CITY ENGINEER'S OFFICE
CITY HALL - SEVENTH FLOOR
455 NORTH MAIN STREET
WICHITA, KANSAS 67202
(316) 268-4501
(316) 268-4114 FAX

STANDARD TYPE 1-A
CURB INLET
OPENING = 150MM x 1.525MM

NEIL CABLE P.E. - CITY ENGINEER

PROJECT NUMBER	INDEX CODE
XXX-XXXXX	XXXXXX
DATE MAR 96	SHEET 26 OF 85

TYP1A-S.DWG