FHWA REG NO	STATE	PROJECT NO.	YEAR	SHEET NO.	TOTAL SHEETS
7	KANSAS	87N-0200-01	2003	29	85

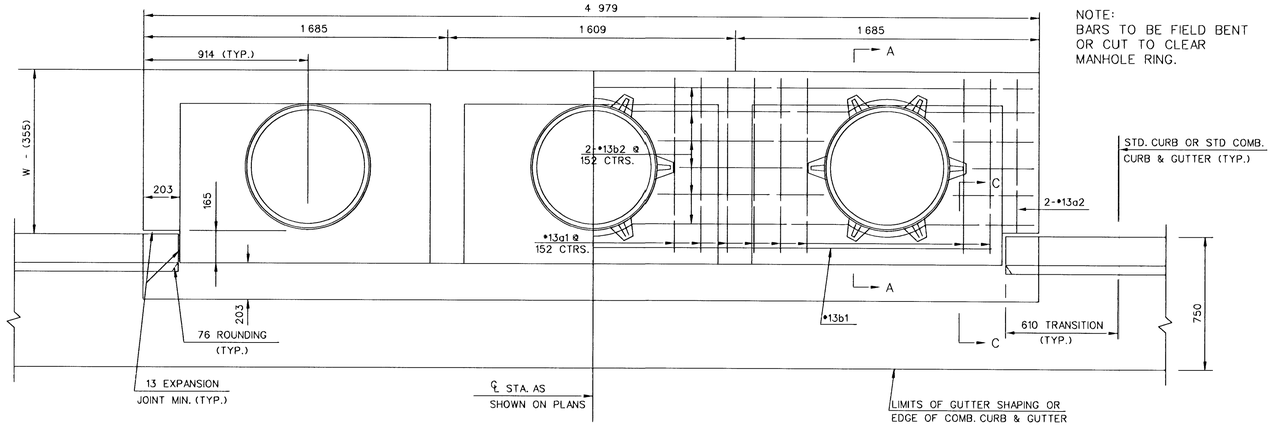

NOTE:
BARS TO BE FIELD BENT OR CUT TO CLEAR MANHOLE RING.

SLAB REINFORCING NOT SHOWN

SHOWING SLAB REINFORCING

PLAN

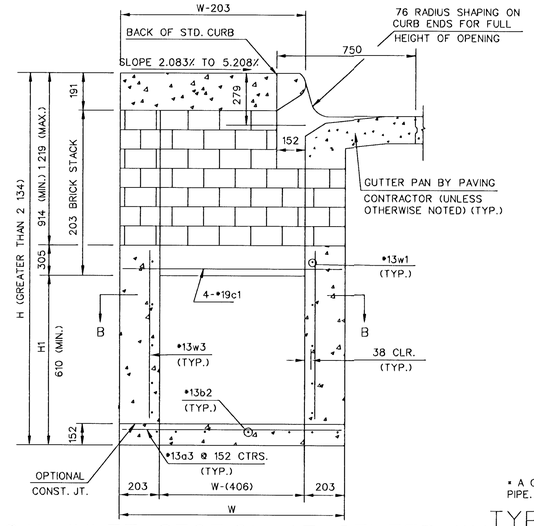

TYPICAL INLET SECTION AT CENTER WALL

(REINFORCED CONCRETE WALLS)

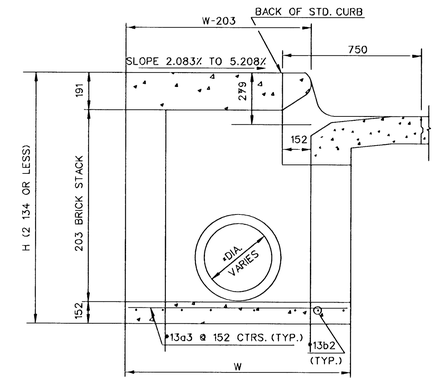

* A CENTER WALL OPENING SHALL BE PROVIDED BY MEANS OF A SECTION OF REINFORCED CONCRETE PIPE. THE MINIMUM DIAMETER USED SHALL BE THAT OF THE OUTLET PIPE.

TYPICAL INLET SECTION AT CENTER WALL

(MASONRY WALLS)

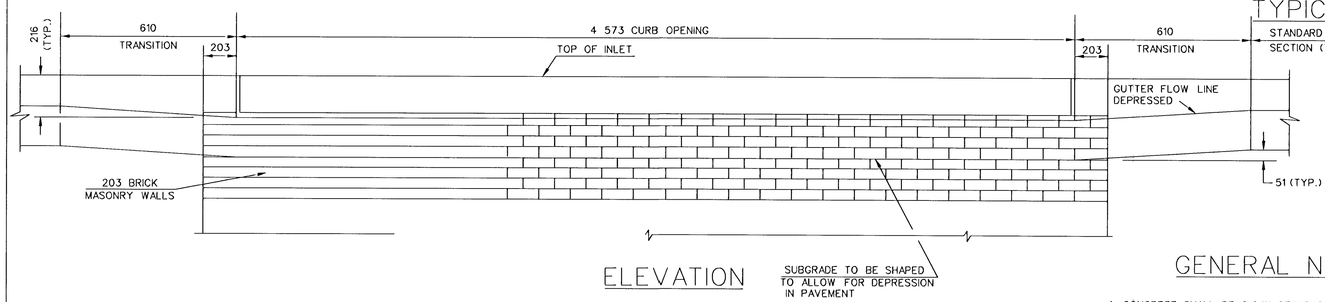

ELEVATION

GENERAL NOTES

1. CONCRETE SHALL BE C.O.W. STANDARD PAVING MIX. ALL EXPOSED EDGES SHALL BE FINISHED WITH AN EDGING TOOL. REINFORCING BARS SHALL BE FIELD BENT OR CUT TO CLEAR PIPES. ALL BARS ARE •13 BARS AT 152 mm SPACING AND SHALL HAVE A MINIMUM CLEARANCE OF 38 mm UNLESS OTHERWISE NOTED. FLOORS OF INLET SHALL BE SHAPED WITH 8 SACK SAND MIX CONCRETE TO INCREASE HYDRAULIC EFFICIENCY SUCH THAT THE INLET WILL BE SELF CLEANING BETWEEN ALL INLET AND/OR OUTFALL PIPE(S). THE CONTRACTOR WILL BE REQUIRED TO CONSTRUCT 203 mm BRICK MASONRY WALLS BETWEEN THE CONCRETE INLET BASE AND TOP ON THIS INLET WHEN H= 2 134 mm OR LESS AND W= 1 930 mm OR LESS.

2. THE ENDS OF ALL PIPES INSTALLED IN INLETS SHALL BE CUT OFF FLUSH WITH THE INSIDE FACE OF THE INLET WALL.

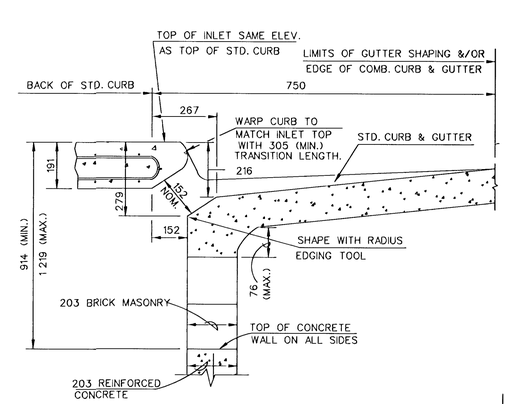

SECTION C-C

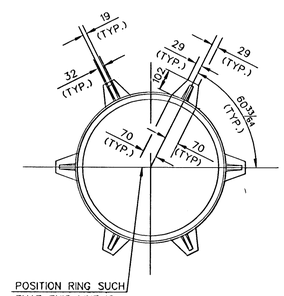

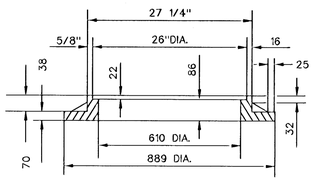

INLET FRAME

WT.-81.65 kg

SEE CITY OF WICHITA STANDARD MANHOLE FRAME AND COVER DETAIL SHEET FOR COVER DETAILS TO BE USED WITH INLET FRAME.

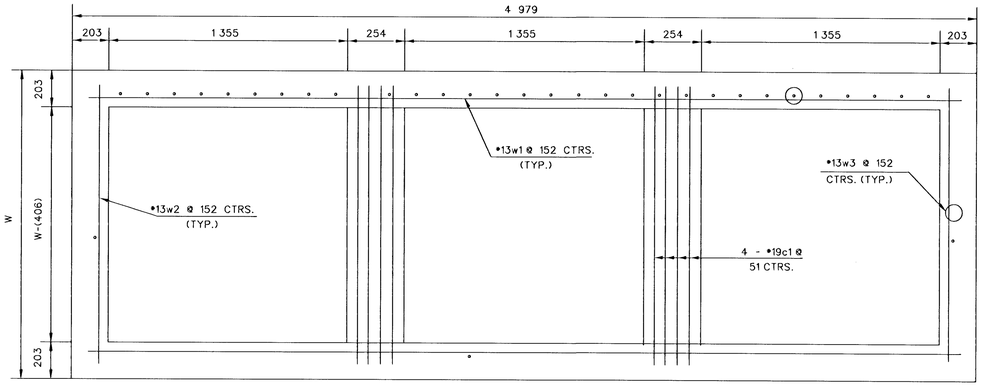

SECTION B-B

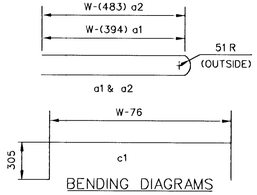

BENDING DIAGRAMS

SLAB AND FLOOR REINFORCING

		W=1 321		W=1 626		W=1 930		W=2 235		W=2 540	
MARK	SIZE	NO.	LENGTH	NO.	LENGTH	NO.	LENGTH	NO.	LENGTH	NO.	LENGTH
a1	•13	20	2 013	20	2 623	20	3 232	20	3 842	20	4 451
a2	•13	2	1 829	2	2 438	2	3 048	2	3 658	2	4 267
a3	•13	33	1 245	33	1 549	33	1 854	33	2 159	33	2 464
b1	•13	1	4 496	1	4 496	1	4 496	1	4 496	1	4 496
••b2	•13	18	4 902	24	4 902	30	4 902	36	4 902	42	4 902

WALL REINFORCING

		W=1 321		W=1 626		W=1 930		W=2 235		W=2 540	
MARK	SIZE	NO.	LENGTH	NO.	LENGTH	NO.	LENGTH	NO.	LENGTH	NO.	LENGTH
c1	•19	8	1 854	8	2 159	8	2 464	8	2 769	8	3 073
w1	•13	①	4 902	①	4 902	①	4 902	①	4 902	①	4 902
w2	•13	①	1 245	①	1 549	①	1 854	①	2 159	①	2 464
w3	•13	②	③	②	③	②	③	②	③	②	③

•• FIELD BEND OR CUT REINFORCING AS REQUIRED FOR CLEARANCE
① 4(H1-152)
② 60+4(W-305)
③ H1-(229)

STANDARD CURB INLET PRECAST TOPS				
W	PRE-CAST TOP SIZE	PIPE SIZE	m^3	CONC.
1 321	1 118 x 3 454 x 191	530 & SMALLER	35/64	0.63
1 626	1 422 x 3 454 x 191	600 & 750	35/64	0.83
1 930	1 727 x 3 454 x 191	900 & 1 050	35/64	1.03
2 235	2 032 x 3 454 x 191	1 200 & 1 350	35/64	1.23
2 540	2 337 x 3 454 x 191	1 500 & 1 675	35/64	1.43

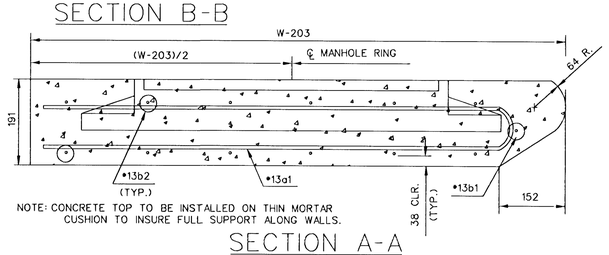

NOTE: CONCRETE TOP TO BE INSTALLED ON THIN MORTAR CUSHION TO INSURE FULL SUPPORT ALONG WALLS.

SECTION A-A

REVISED: 12-21-1984

STANDARD TYPE 1 CURB INLET

INLET OPENING-152 x 4 573

OCTOBER, 1984

CITY OF WICHITA, KANSAS

Design BER KJS MWB	Checked by	Checked by	
Drawn by	Date	Date	Job No.

G:\CIVIL\9925\7\SWS\6-15-15\.DWG