PLOTTED: Wednesday, November 29, 2017 @ 11:33AM

	STATE	PROJECT NO.	YEAR	SHEET NO.	TOTAL SHEETS
	KANSAS	87 N–0615–01	2017	1	183

KDOT PROJ. NO. 87 N-0615-01
F.A. NO. STP-N-061(501)

GRADING
SURFACING
STORM SEWER
BRIDGE
PAVEMENT MARKING
SEEDING

STATE OF KANSAS
DEPARTMENT OF TRANSPORTATION
PLAN AND PROFILE OF PROPOSED
127TH STREET EAST
FROM 13TH STREET NORTH TO 21ST STREET NORTH

FEDERAL AID PROJECT

CITY OF WICHITA PROJECT NO. 472-85158
CITY OF WICHITA OCA NO. 707065

SEDGWICK COUNTY
CITY OF WICHITA

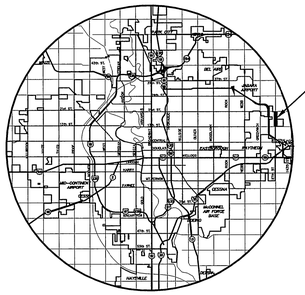

LOCATION MAP

SCALE: 1" = 300'
300 0 300 600

INDEX TO DRAWINGS

SHEET NO.	DESCRIPTION
1	TITLE SHEET
2	GENERAL NOTES
3-4	TYPICAL SECTIONS
5-15	PAVING PLANS
17-19	PAVING BUBBLES MAPS
20	STORM SEWER KEY MAP
21	STORM SEWER SUMMARY
22-35	STORM SEWER PLAN AND PROFILES
36-38	STORM SEWER BUBBLE MAPS
39-54	PAVING DETAILS
55-72	STORM SEWER DETAILS
73	SANITARY SEWER MANHOLE DETAILS
75	MISCELLANEOUS DETAILS
76-80	RETAINING WALL PLAN AND DETAILS
81-101	BRIDGE WIDENING DETAILS
102-109	WATER LINE PLANS AND DETAILS
110	WATER LINE BUBBLE MAPS
111-113	SUMMARY AND RECAPITULATION OF QUANTITIES
114-121	EROSION CONTROL PLAN AND DETAILS
122-126	ROADSIDE IMPROVEMENT PLANS
127	TRAFFIC SIGNAL PLANS
128-133	PAVEMENT MARKING AND SIGNING PLANS AND DETAILS
134	CONSTRUCTION SEQUENCE SUMMARY
135-150	TRAFFIC CONTROL PLANS
151-152	DRAINAGE MAP
153-183	CROSS SECTIONS

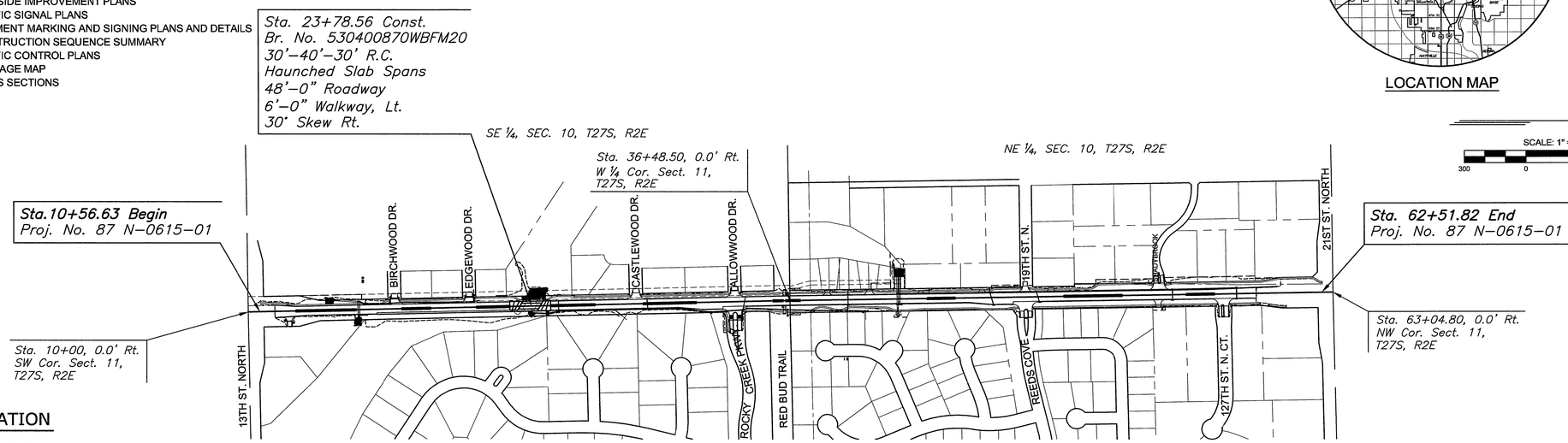

DESIGN DESIGNATION

AADT (2014)	= 4,660
AADT (2034)	= 6,924
DHV	= 10%
D	= 60%
T	= 3%
V	= 40 MPH
C of A	= None
Lateral Offset	= 2 FT.

NOTE: ONE LANE NORTH BOUND TRAFFIC TO BE CARRIED THROUGH CONSTRUCTION. LOCAL TRAFFIC WILL BE PERMITED TO ADJACENT PROPERTIES.

NOTE: THE PIPES ON THIS PROJECT ARE IN ACCORDANCE WITH THE CURRENT KDOT PIPE POLICY.

CONVENTIONAL SIGNS

COUNTY LINE	CENTER LINE OF PROJECT
CITY LIMITS	TERRACE
STATE OR NATIONAL LINE	CULVERTS
TOWNSHIP, SECTION or GRANT LINE	DROP INLET & STORM SEWER
PROPERTY LINE	ACCESS CONTROL
HIGHWAY FENCE	POWER POLE
EXISTING FENCE	TELEPHONE POLE
GUARDRAIL	MARSH
CONSTRUCTION LIMITS	HEDGE
RIGHT OF WAY LINE	TREES
TRAVELED WAY	PROFILE ELEVATION
RAILROADS	STREAM or CREEK

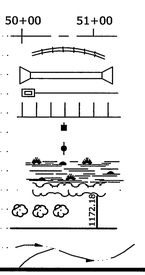

GROSS LENGTH OF PROJECT	5,195.19	FT.	
EXCEPTIONS	0.00	FT.	
ADDITIONS	0.00	FT.	
NET LENGTH OF PROJECT	5,195.19	FT.	0.984 MILES
NET LENGTH OF BRIDGES	102.94	FT.	0.019 MILES
NET LENGTH OF ROAD	5,092.25	FT.	0.889 MILES

JAY ANGLEMYER LICENSED 13281 11/29/17 KANSAS PROFESSIONAL ENGINEER

CARL J. SWARTZ LICENSED 7164 11-27-2017 KANSAS PROFESSIONAL ENGINEER

JEFFREY T. CARTWRIGHT LICENSED 11-29-17 KANSAS PROFESSIONAL ENGINEER

APPROVED - DATE
11/30/17
GARY JANZEN, P.E.
CITY ENGINEER

MKEC
Wichita, KS • 316-684-9600

STREET IMPROVEMENTS FOR
127TH STREET EAST
FROM 13TH STREET NORTH TO 21ST STREET NORTH

©2017
MKEC Engineering
All Rights Reserved
www.mkec.com
These drawings and their contents, including, but not limited to, all concepts, designs, & ideas are the exclusive property of MKEC Engineering (MKEC), and may not be used or reproduced in any way without the express consent of MKEC.

TITLE SHEET

PROJECT NO.	472-85158
DATE	11/29/17
SCALE	1"=300'

DESIGNED	DRAWN	CHECKED
JRA	DM	JRA

NO.	REVISION	DATE

SHEET NO.
1 OF 183

Sh. No. 1

BY	DATE
SURVEYED	
PLOTTED	
INKED	
DESIGNED	
SQUAD	

J:\PROJECTS\2014\1401040280 - COW_127TH E 13TH TO 21ST\05-CIVIL\CAD\PAV\1429RET01.DWG

PLOTTED: Wednesday, November 29, 2017 @ 02:16PM

STATE	PROJECT NO.	YEAR	SHEET NO.	TOTAL SHEETS
KANSAS	87 N–0615–01	2017	2	183

GENERAL NOTES

Unless shown or stated otherwise on these drawings, drawings, materials, and construction shall be in accordance with City of Wichita Standard Specifications and special provisions.

Contractor will be required to provide a minimum advance notice of seventy–two (72) hours to utility companies prior to starting any excavation as follows:

Kansas One–call	1–800–344–7233
or local Wichita	687–2470

The Contractor must notify the following in case of an emergency:

AT&T (telephone)	1–316–246–8464
City of Wichita Water	1–316–268–4555
City of Wichita Sewer	1–316–268–4073
City of Wichita Stormwater	1–316–268–4090
City of Wichita Traffic	1–316–268–4034
Cox Communications (cable)	1–888–249–3530
Kansas Gas Service (gas)	1–888–482–4950
Westar (electric)	1–800–544–4857
Phillips 66 (gas)	1–XXX–XXX–XXXX

The Contractor shall be responsible for preserving existing property irons regardless if shown on plans or not. The Contractor will be required to reestablish any property irons which are damaged or destroyed by construction operations. Such irons shall be reestablished at the Contractor's expense by a licensed land surveyor in accordance with state laws.

Construction staking shall be performed by the City of Wichita Public Works Department with exception for the bridge widening at Station 28+78.56. All staking performed by the City of Wichita will be done at no cost to the contractor. The contractor shall coordinate the survey staking with the City of Wichita Public Works Department and give the surveyor 24 hours notice when stakes are required. See Sheet 81 for bridge staking requirements.

Utility service lines, poles, valve boxes, meters, etc... are to be adjusted as necessary by others prior to construction unless the plans specifically call for their adjustment by the contractor. Existing utilities and their location, as shown on the plans, represent the best information obtainable for design. Some utilities have been relocated and may not reflect so on the plans. Location information has been obtained from the various utility companies and is either from company record drawings or company provided field locations. The plan locations shown are not guaranteed. Additional existing utilities may also be encountered. The contractor will be required to work around existing utilities within the right–of–way which do not conflict with proposed construction.

The contractor shall adjust water valve boxes as directed by the engineer at the price bid for said adjustments. The water department shall field locate water valves one time during construction when requested by the contractor. It shall be the contractors responsibility to preserve such field locations during the construction process. Water valves or water valve boxes damaged during construction shall be repaired by the contractor at his own expense.

All stationing, radii, pavement widths, offset distances, etc... are measured to the back of the curb and gutter and along the project baseline unless otherwise noted on the plans. Spot elevations on plan sheets are at Back of Full–Height Curb and Gutter flow line. Spot elevations on Intersection Details are as noted.

Rubble from the removal of miscellaneous structures and excess excavation which is to be wasted shall be disposed of on sites to be provided by the contractor. These sites shall be approved by the Engineer as to suitability, appearance and site location. Locations that, in the opinion of the Engineer, will leave an unsightly appearance will not be approved. All disposal sites must be approved by the Kansas Department of Health and Environment. Material either stockpiled or disposed of in a flood plain would require a Kansas State Board of Agriculture permit. Any material dumped in waters of the United States or wetlands is subject to U.S. Corps of Engineers permitting regulations. Any material buried or stockpiled beyond approved construction limits would require additional archeological investigations unless buried in a previously approved borrow location. Millings from the "Mill and Overlay" operation shall become the property of the contractor and disposed of on sites provided by the contractor. These sites shall be approved by the Engineer as to suitability, appearance and site location.

A saw cut of at least one–half the depth of the Existing Surface courses or one–fourth the depth of the existing total pavement thickness shall be provided at locations where proposed construction abuts an Existing Surface or Pavement for which partial removal of that surface or pavement is required. Saw Joint to facilitate removal within three (3) feet of Existing Joints will not be permitted and for such instances the Limits of Removal shall extend to the Existing Joint.

Contractor shall remove and deliver to 1801 S. McLean all traffic signal components, regulatory signs, street name signs, manhole frames and lids, removed hydrants, meters, etc., noted for removal during construction. Contractor shall be responsible for the installation of new signs. All associated costs to transport the salvaged material will be Subsidiary to the bid item "Transportation of Salvaged Material".

Unless otherwise shown on the plans, all asphaltic concrete pavement placed on city projects shall use PG 64–22 asphalt cement for the full thickness on non–arterial streets and private pavements, with BC–1 and SC–1 mix designs for base and surface asphalt, respectively. Arterial streets shall utilize a BM–2 mix design with PG 64–22 asphalt cement for the base and PG 70–28 for surface. Mill and overlay projects using BM1–B surface mixes shall also use PG 70–28 graded oil. The contractor may substitute an alternate grade of asphalt that complies with or exceeds the upper and lower grade designations for the grade specified. Such substitutions require advanced approval by the Engineer and any additional cost will be the responsibility of the contractor. All temporary asphalt pavement on the project shall be 6" asphalt meeting the specifications for City of Wichita BC–1 mix.

Bituminous Surface Course shall be placed with a laydown machine having automatic controls for line and grade.

A tack coat of emulsified Asphalt (SC–1H or CSS–1H) shall be applied at an approximate rate of 0.05 gal. per square yard between each lift of Bituminous Material.

Construction Joints in each lift shall be staggered a minimum distance of 12 inches from joints in preceding lifts and placed so that a joint will be constructed on the centerline of the top lift.

Crushed Rock Base is to be compacted and smoothed with a steel faced roller prior to placement of pavement. Tack coat will not be applied to Rock Base.

Inlet Hook–ups shall be constructed as indicated on the inlet detail drawings and shall be Bid as "Inlet Hookup". No distinction will be made between Hook–ups based on the size and type of inlet.

All areas disturbed by construction that are adjacent to developed properties shall be restored with sod to match existing turf type. Restoration of disturbed areas shall include, but not be limited to, top soil preparation and sodding. All Sodding work shall be in accordance with City Standard Specifications and the City Administrative Regulation No. AR6.5, which governs cleanup and restoration or replacement following construction. The "Summary of Quantities" shows the estimated area of Sodding, with a bid item for the same. When the weather/season prevents the installation of Sod, the Contractor shall be responsible for installing Erosion Control Blanket (Curlex I, or approved equal) at the Back of Curb (8' wide minimum). All costs for Erosion Mat installation shall be Subsidiary to "Site Restoration". See Sections 902.7 and 902.8 of the standard specifications.

The contractor shall reseed all undeveloped areas disturbed by construction with a mixture of Ryegrass (applied at a rate of 200 lbs. per acre) and Buffalo grass, depending on the soil conditions (applied per Standard Specifications). Pure nitrogen fertilizer shall also be applied at a rate of 1.5 lbs. per thousand square feet. The seed shall be watered with a deep soaking every two (2) weeks during dry periods until a mature stand of grass is obtained. The "Summary of Quantities" shows the estimated area of disturbed area to be seeded, with a bid item for the same. The permanent seeding may be omitted only if sodding is required. The contractor shall be responsible for installing Erosion Control Blanket (Curlex I, or approved equal) at the back of curb, to and including the limits of all seeded areas. All costs for this work shall be subsidiary to "seeding."

See the Roadside Improvement Plans for delineation of seeding and sodding areas and for stream channel seed mix.

All business signs, fences, posts and landscaping features in conflict with the new construction will be relocated by others prior to construction. Upon the start of construction, all items that remain within the construction limits shall be removed and disposed of by the contractor unless otherwise noted.

Select Soil (Topsoil) shall be placed at a minimum depth of 6 inches or as specified on the drawings. The finished grade indicates the surface elevation after the prescribed select soil (topsoil) thickness has been placed. Where offsite select soil is needed, it shall be fertile natural topsoil, typical of the locality, obtained from well drained areas. Stockpiled topsoil may be used. It shall be without admixture of subsoil or slag and shall be free of stones, lumps, sticks, plants, or their roots, toxic substances or other extraneous matter that may be harmful to plant growth or would interfere with future maintenance. Topsoil shall be approved by the Project Engineer prior to placement. Select soil is subsidiary to "fill, compacted (95% density)".

All gravel or other similar debris larger that ½ inch in diameter shall be raked up and removed during final grade preparation.

New storm sewer installed under proposed pavements shall be protected from construction traffic during construction operations.

Proposed curbs matching existing curbs shall be altered to match the shape and dimensions of the existing curb. Positive drainage shall be maintained through such transitions.

Pavement cross–slope and width transitions will be required where proposed pavement matches existing pavement. Transitions shall be made over an adequate length to prevent sumps from being created in gutters.

Trees to be removed are marked ⊗ or are noted on the plan. Tree removal shall be paid for as "Tree Removal, Large" or "Tree Removal, Small". Removal of tree rows shall be paid for as "Tree Row Removed" and will be measured by the linear foot. Removal of mass tree areas, brush, shrubs and other vegetative debris shall be Subsidiary to "Site Clearing" and will be marked on the plans. Contractor is responsible for confirming and delegating tree removal areas prior to executing removal.

Trees and tree row removal between Sta. 37+50 and Sta. 50+75 on the west side of 127th will require caution due to the Phillips 66 gas line adjacent to the trees. Trees shall be removed above ground surface and the stumps ground to a minimum depth of one foot below the surface. A Phillips 66 representative must be present during tree removal operations.

All backfill for storm sewer trenches shall be in accordance with the City of Wichita's standard specifications. Backfill for storm sewer under existing or proposed pavement, including lines running parallel and adjacent to the back of curb, shall be jetted and vibrated sand. The sand fill shall be brought up uniformly to an elevation two feet below the bottom of the existing or proposed pavement (12 inches above the top of pipe shall be the minimum). Cost for this backfill shall be paid on a linear foot basis as "Fill, Sand (Flushed & Vibrated)".

All connections between existing Storm Sewer and Storm Sewer Structures to proposed Storm Sewer and Storm Sewer Structures shall be Subsidiary to the cost of installation of the new Storm Sewer and/or Structure.

The bid item "Traffic Signalization" shall include all labor, equipment and materials to install two separate solar panel pedestal signals with concrete bases in the locations noted in the plans. Both signals shall be full functioning including signs, solar engines, lights, etc. Traffic Signalization" will be bid lump sum.

"Mailbox, Removed and Reset" will consist of temporary relocating the mailbox as required to maintain mail service during construction and permanently reinstalling the mailbox at an Engineer–approved location after construction. In no instance shall mail service be disrupted.

Epoxy coated reinforcing steel shall be used in the bridge, approach slabs, moment slab, and all rails. Black reinforcing steel shall be used in the retaining wall and box culverts. Welded wire fabric is not required to be epoxy coated. See the various structural details for additional information.

The bid price for "Concrete Safety Barrier (Temporary)" shall include providing the barrier and include the cost of multiple installations and removals as necessary for construction. Refer to the traffic control plans for the proper handling of traffic during construction. The quantity of barrier noted in the recapitulation represents the maximum amount of barrier that will be needed for the set–up requiring the most barrier. Not all set–ups will necessarily require this amount of barrier.

UTILITY NOTES:
The Contractor is responsible for the support of Existing Water and Sanitary Sewer lines during utility trenching operations.

Contractor shall limit the extent of trench open overnight and weekends to less than 50 feet.

Opening and closing of water valves shall be done slowly to prevent damage to the water distributions system from water hammer. All valves closed by the contractor must be reopened as new construction permits. The project inspector must ascertain that any valve closed by the contractor is reopened. The contractor will be permitted to operate water valves only when the project inspector assigned to the project is present.

The contractor shall lay a tracer wire and set test stations along all water pipe installed in accordance with city specifications and tracer wire detail on detail sheet 62, cost is subsidiary to pipe installation.

The contractor shall provide materials for temporary blowoff of waterlines. Connections to the existing waterline(s) shall be made with clean, swabbed pipe and flushed upon completion of tie–ins.

Deflections at pipe joint or couplings shall not exceed the pipe manufacturer's recommended maximum.

Any extension greater than one length of pipe shall require testing.

Any existing joint exposed during excavation shall be replaced if within four feet of proposed joint.

The contractor shall protect from damage and support existing utilities through construction as approved by the utility owner and the engineer at the contractor's expense.

All water line installations shall utilize restrained joint pipe in place of thrust blocks. Thrust blocks will not be permitted. The contractor is responsible for determining the required length and location of restrained joint fittings to provide adequate thrust restraint.

Existing water line removals have been estimated and are noted in the Removal table on Sheet 112. Water line removals shall be approved by the engineer prior to executing removals.

Work required for the bid item "MH Adjusted" shall include adjusting the elevation of the manhole ring and lid to match the final plan grade in accordance with the City's standard specifications. No adjustment in bid price will be made for manhole adjustments regardless of manhole type, size or ownership.

Work required for the bid item "MH Adjusted, Special" and "MH Reconstructed" shall be as indicated on the paving plan sheets.

The bid item "Water Meter Adjusted" will involve adjusting the existing box, ring and lid to match the final surrounding grade.

The bid item "Water Meter Relocated" will involve relocating the existing meter, box, ring and lid as near to the existing meter as practical. The station and offset noted in the Utility Adjustment table are to the existing meter. The work will include reconnecting the meter to the existing service line using a Sharkbite connector where appropriate between the new street curb and the relocated meter.

New valves installed with the water line installations will likely need adjusting in later phases of the project. These adjustments will be paid for separately.

PROJECT SURVEY CONTROL:

1) The Project Horizontal Datum is based on the NAD83, Kansas State Plane Coordinate System, South Zone, (US Survey Feet Definition), with a Combined Adjustment Factor (CAF) of 1.000120014. All coordinate and dimensions shown on these plans are modified to Ground values.

The following equations can be used for conversion:
Ground Coordinates to State Plane Coordinates = Ground x 1/CAF
State Plane Coordinates to Ground Coordinates = State Plane x CAF

2) The Vertical Datum used is NAVD88.

UTILITIES

UGE	– Westar
OHE	– Westar
G	– Kansas Gas Service
W	– City of Wichita Water
UGT	– AT&T
ATT	– AT&T
TV	– Cox Communications
SS	– City of Wichita Sanitary Sewer
G(P66)	– Phillips 66 Gas

MKEC
Wichita, KS • 316-684-9600

STREET IMPROVEMENTS FOR

127TH STREET EAST

FROM 13TH STREET NORTH TO 21ST STREET NORTH

©2017
MKEC Engineering
All Rights Reserved
www.mkec.com
These drawings and their contents, including, but not limited to, all concepts, designs, & ideas are the exclusive property of MKEC Engineering (MKEC), and may not be used or reproduced in any way without the express consent of MKEC.

GENERAL NOTES

PROJECT NO.	472-85158
DATE	11/29/17
SCALE	NTS

DESIGNED	DRAWN	CHECKED
JRA	LES	JRA

NO.	REVISION	DATE

SHEET NO.
2 OF 183

J:\PROJECTS\2014\1401040290 - COW_ 127TH E 13TH TO 21ST\05-CIVIL\CAD\GENERAL\1A290N001.DWG

PLOTTED: Wednesday, November 29, 2017 @ 02:18PM

STATE	PROJECT NO.	YEAR	SHEET NO.	TOTAL SHEETS
KANSAS	87 N-0615-01	2017	3	183

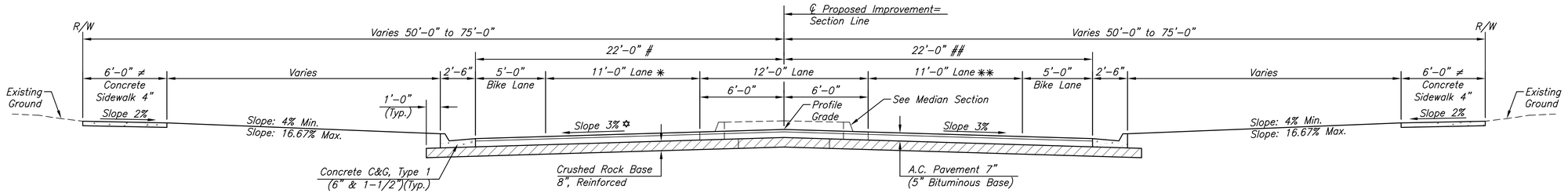

TYPICAL SECTION

✳ Varies from 19'-0" at Sta. 11+29.64 to 11'-0" at Sta. 12+30.06
Varies from 11'-0" at Sta. 56+97.86 to 16'-5" at Sta. 59+27.74

\# Varies from 30'-0" at Sta. 11+29.64 to 22'-0" at Sta. 12+30.06
Varies from 22'-0" at Sta. 56+97.86 to 27'-5" at Sta. 59+27.74

✡ Varies from 2.6% at Sta. 24+79.18 to 3.0% at Sta. 24+93.30

Sta. 11+29.64 to Sta. 22+77.93
Sta. 24+79.18 to Sta. 31+05.91
Sta. 33+20.91 to Sta. 45+26.70
Sta. 47+41.70 to Sta. 59+27.74

✳✳ Varies from 18'-3" at Sta. 11+29.64 to 11'-0" at Sta. 12+91.11
Varies from 11'-0" at Sta. 58+98.34 to 12'-9" at Sta. 59+27.74

Varies from 29'-3" at Sta. 11+29.64 to 22'-0" at Sta. 12+91.11
Varies from 22'-0" at Sta. 58+98.34 to 23'-9" at Sta. 59+27.74

≠ See plans for sidewalk locations. See table for sidewalk adverse slope locations.

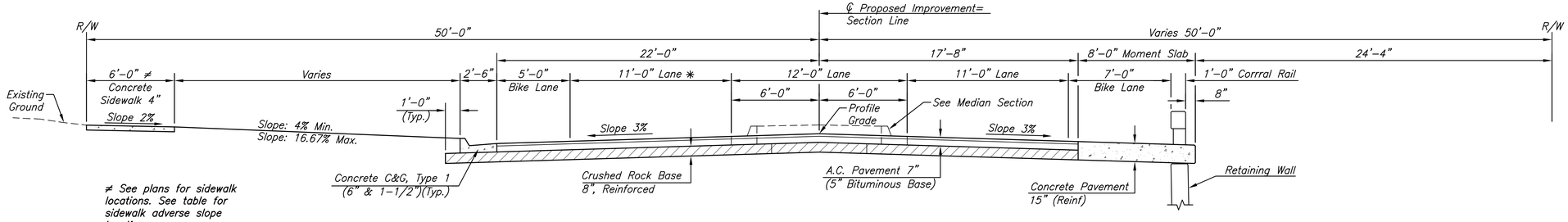

≠ See plans for sidewalk locations. See table for sidewalk adverse slope locations.

TYPICAL SECTION

Sta. 16+27.98 to Sta. 22+77.93

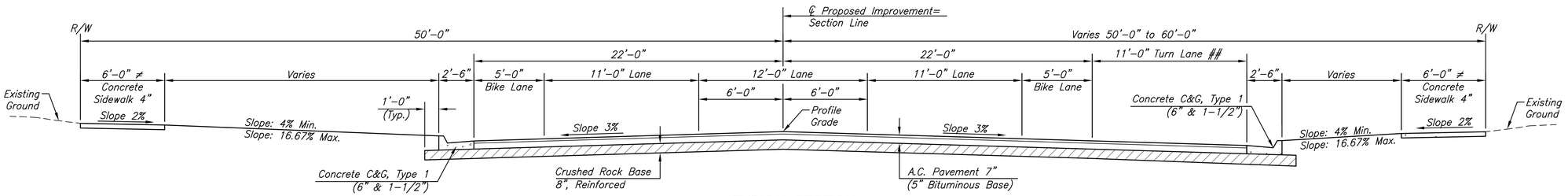

TYPICAL SECTION

Sta. 31+05.91 to Sta. 33+20.91
Sta. 45+26.70 to Sta. 47+41.70

Varies from 0'-0" at Sta. 31+05.91 to 11'-0" at Sta. 32+15.91
Varies from 0'-0" at Sta. 45+26.70 to 11'-0" at Sta. 46+36.70

MKEC
Wichita, KS • 316-684-9600

STREET IMPROVEMENTS FOR

127TH STREET EAST

FROM 13TH STREET NORTH TO 21ST STREET NORTH

©2017
MKEC Engineering
All Rights Reserved
www.mkec.com
These drawings and their contents, including, but not limited to, all concepts, designs, & ideas are the exclusive property of MKEC Engineering (MKEC), and may not be used or reproduced in any way without the express consent of MKEC.

TYPICAL SECTIONS

PROJECT NO.	472-85158
DATE	11/29/17
SCALE	NTS

DESIGNED	DRAWN	CHECKED
JRA	WNJ	JRA

NO.	REVISION	DATE

SHEET NO.

3 OF 183

Sh. No. 3

J:\PROJECTS\2014\1401040290 - COW_127TH E 13TH TO 21ST\05-CIVIL\CAD\PAVI\1426ES01.DWG

PLOTTED: Wednesday, November 29, 2017 @ 02:18PM

STATE	PROJECT NO.	YEAR	SHEET NO.	TOTAL SHEETS
KANSAS	87 N-0615-01	2017	4	183

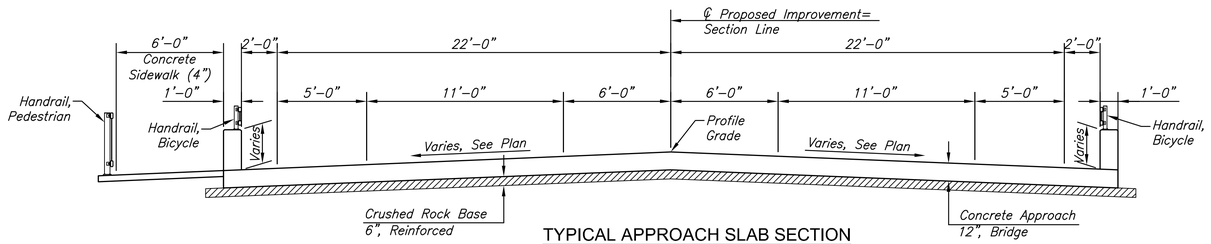

TYPICAL APPROACH SLAB SECTION

Sta. 22+77.93 to Sta. 23+27.09
Sta. 24+30.03 to Sta. 24+79.18

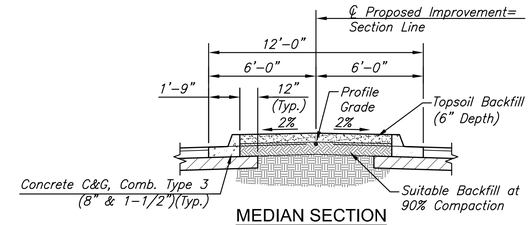

MEDIAN SECTION

Sta. 12+32.00 to Sta. 15+29.00
Sta. 17+51.00 to Sta. 18+93.00
Sta. 21+15.00 to Sta. 22+77.93
Sta. 24+79.18 to Sta. 26+96.00
Sta. 29+30.00 to Sta. 31+92.00
Sta. 35+66.00 to Sta. 36+16.00
Sta. 36+28.00 to Sta. 37+00.00
Sta. 43+20.00 to Sta. 44+57.00
Sta. 49+88.00 to Sta. 52+74.00
Sta. 55+85.00 to Sta. 57+25.00

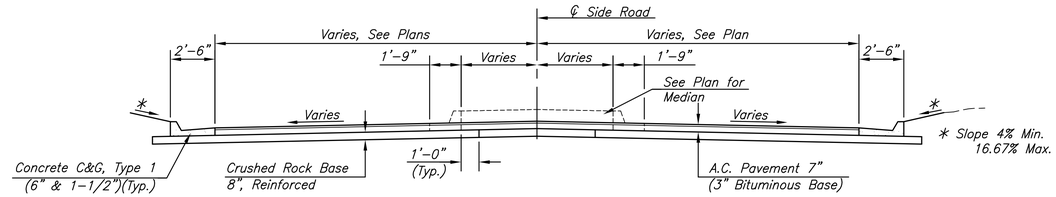

TYPICAL SECTION - SIDE ROADS

Rocky Creek Pkwy. – Sta. 33+79.62 (Median)
Reeds Cove – Sta. 48+02.39 (Median)
Shadybrook – Sta. 54+56.58 (Median)
127th Street N. Ct. – Sta. 57+63.06 (Median)

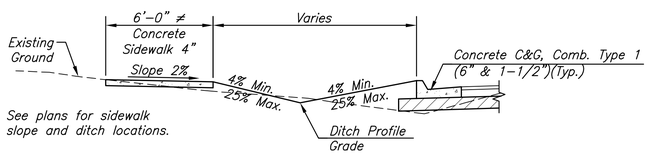

TYPICAL SECTION WITH DITCH BEHIND CURB

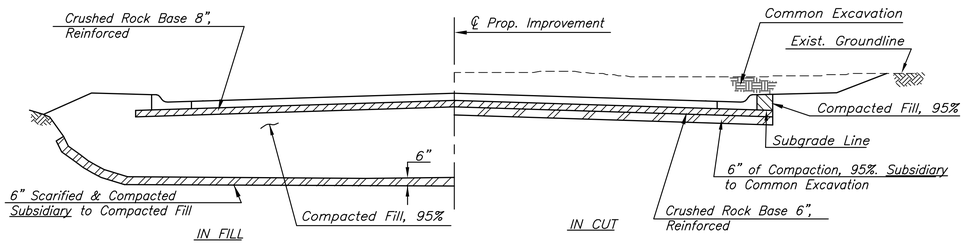

FOUNDATION TREATMENT AND COMPACTION OF EARTHWORK

MKEC
Wichita, KS • 316-684-9600

STREET IMPROVEMENTS FOR

127TH STREET EAST

FROM 13TH STREET NORTH TO 21ST STREET NORTH

©2017
MKEC Engineering
All Rights Reserved
www.mkec.com
These drawings and their contents, including, but not limited to, all concepts, designs, & ideas are the exclusive property of MKEC Engineering (MKEC), and may not be used or reproduced in any way without the express consent of MKEC.

TYPICAL SECTIONS

PROJECT NO.	472-85158
DATE	11/29/17
SCALE	NTS

DESIGNED	DRAWN	CHECKED
JRA	WNJ	JRA

NO.	REVISION	DATE

SHEET NO.

4 OF 183

Sh. No. 4

J:\PROJECTS\2014\140104\299 - COW_127TH E 13TH TO 21ST\06-CIVIL\CAD\PAVI\429DES02.DWG

PLOTTED: Wednesday, November 29, 2017 @ 02:17PM

SW Cor. Sec. 11, T27S, R2E
Sta. 10+00.00, 0.00' Rt.
1. Found ⅝" rebar with Garber cap
2. Chiseled "X" on se cor. conc. traffic signal pole base — 71.91' NW
3. Chiseled "X" on southerly cor. of conc. traffic signal pole base — 72.35' NE
4. Chiseled "X" on nw cor. of conc. traffic signal pole base — 71.08' SE
5. Chiseled "X" on easterly cor. of conc. traffic signal pole base — 68.57' SW
6. N=1694562.090, E=1691609.681

PI Sta. 10+00.00, 127th St. E.
1. N=1694562.090, E=1691609.681

STATE	PROJECT NO.	YEAR	SHEET NO.	TOTAL SHEETS
KANSAS	87 N-0615-01	2017	5	183

MKEC
Wichita, KS • 316-684-9600

Sta. 12+50 to Sta. 15+50, clear and grub approximately 0.14 acres of trees within the construction limits. Paid for as "Site Clearing".

Construct 129.2 S.Y. of Rip-Rap, Light Stone. See Sheet 66 and 122. See Sheet 15 for Special Grading Plan.

SCALE: 1"=20'
0 10 20 40

Sta. 10+56.63 Begin
Proj. No. 87 N-0615-01

P.V.I. Sta. 12+25
Elev.=1350.24
150' V.C.

SE ¼, Sec. 10, T27S, R2E

P.V.I. Sta. 14+50
Elev.=1341.47
290' V.C.

10+56.63 | 11+29.64 | 11+50 | 12+00 | 12+25 | 12+30.06 | 12+50 | 13+00 | 13+50 | 14+00 | 14+50 | 15+00 | 15+50

-0.94% (Based on ℄) | -3.90% (Based on ℄) | +0.30% (Based on ℄)

13TH St. N.

+75.46 R/W
75' ℄

Transition Crown

Match Existing Begin Taper, 30.02' Lt.

Exist. 75' R/W

+49.99 R/W=
Temp. Const.
Esmt. 75' ℄

End Taper 22.00' Lt.

BENTON HOLDINGS LLC.
C 51884000A
Lot 1, Blk. 4
Cobblestone Add.

+66.11

+49.99 R/W
50' ℄

25' Perm. Drain. Dedic.

+66.11

25' Temp. Const. Esmt.

+4.99

45' Continental Pipeline Co. Esmt. (Film 428, Pg. 549)

Const. Limits

SWS Line 1

Exist. 50' R/W

SWS Line 2

6" Sidewalk

6' Sidewalk

℄ Prop. Improv. Section Line

SWS Line 1

16" WTR

N 01°15'01" W

⅝ BAR CAP

Exist. Crown

Exist. Bit. Pvmt.

0.98'

127TH St. E.

MWEC CP
8.63

5.67
℄=1345.67
1348.97
8.47

1347.42(Ex)
6.92(Ex)

20' R (Typ.)

Const. Limits

1348.52
8.02

5.69
7.85

1347.06(Ex)
6.50(Ex)

24" SS

SSMH

SSMH 33

Match Existing Begin Taper, 29.24' Rt.

End Taper 22.00' Rt.

+00.24
25' Ent.

+74.83 R/W
75' ℄

Exist. 75' R/W

+49.88 R/W
75' ℄

+49.88 R/W
50' ℄

Exist. 50' R/W

20' Util. Esmt.

35' Bldg. Stbk.

FUTURE BOUND, LLC.
C 52429
Lot 1, Blk. 3
Rocky Creek Add.

Transition Crown

-0.94% (Based on ℄) | -3.90% (Based on ℄) | +0.30% (Based on ℄)

Sta. 10+00.00, 0.0' Rt.
SW Cor. Sec. 11, T27S, R2E

SW ¼, Sec. 11, T27S, R2E

Existing flume to remain. Warp proposed curb and gutter to match existing flume.

Remove Existing End Section and Install 6.0 L.F. of 18" RCP. Reinstall Existing End Section to new 18" RCP.

P.V.I. Sta. 12+25
Elev.=1350.24
150' V.C.

Sta. 12+12.74, 55.1' Rt.
Construct 11.0 L.F. of Concrete "Gutter Flume". See Sheet 75

Sta. 11+85.82, 41.5' Rt.
Construct 11.0 L.F. of Concrete "Gutter Flume". See Sheet 75

P.V.I. Sta. 14+50
Elev.=1341.47
290' V.C.

Construct 119.9 S.Y. of Rip-Rap, Light Stone. See Sheet 66, 122. See Sheet 15 for Special Grading Plan.

MEDIAN POINTS				
POINT NO.	STATION	OFFSET	TOP CURB ELEVATION	FLOWLINE ELEVATION
1	12+38.00	6.00' Rt.	1349.90	1349.23
2	12+32.00	6.00' Rt.	1349.39	1349.39
3	12+32.00	6.00' Lt.	1349.37	1349.37
4	12+38.00	6.00' Lt.	1349.88	1349.21
5	15+23.00	6.00' Rt.	1341.92	1341.92
6	15+23.00	6.00' Lt.	1341.92	1341.92
7	15+29.00	6.00' Lt.	1342.55	1341.88
8	15+29.00	6.00' Rt.	1342.55	1341.88

BM#1 Chiseled square on top of curb on the east side of 127th street North of 13th Street at the start of a flume. Sta. 11+30.02, 31.54' Rt., Elev.=1350.995 (NAVD 88)

UTILITY ADJUSTMENT TABLE				
STATION	OFFSET	EXIST. ELEV.	PROP. ELEV.	REMARKS
14+19.68	33.26' RT.	1343.86	1343.87	MH ADJUSTED

LEGEND

- Pavement Removal
- Construct Wheelchair Ramp See Sh. No. 53
- Tree Removal
- Tree Row Removal
- Tree Area Removal Boundary
- Storm Sewer Removal

STREET IMPROVEMENTS FOR

127TH STREET EAST

FROM 13TH STREET NORTH TO 21ST STREET NORTH

©2017
MKEC Engineering
All Rights Reserved
www.mkec.com
These drawings and their contents, including, but not limited to, all concepts, designs, & ideas are the exclusive property of MKEC Engineering (MKEC), and may not be used or reproduced in any way without the express consent of MKEC.

PAVING PLAN
STA. 10+00 TO
STA. 15+50

PROJECT NO.	472-85158
DATE	11/29/17
SCALE	1"=20'

DESIGNED	DRAWN	CHECKED
JRA	WNJ	JRA

NO.	REVISION	DATE

SHEET NO.
5 OF 183

Sh. No. 5

J:\PROJECTS\2014\1401040299 - COW_127TH E 13TH TO 21ST\06-CIVIL\CAD\PAV\1402SEP01.DWG

PLOTTED: Wednesday, November 29, 2017 @ 02:17PM

STATE	PROJECT NO.	YEAR	SHEET NO.	TOTAL SHEETS
KANSAS	87 N-0615-01	2017	6	183

MKEC
Wichita, KS • 316-684-9600

SCALE: 1"=20'
0 10 20 40

STREET IMPROVEMENTS FOR

127TH STREET EAST

FROM 13TH STREET NORTH TO 21ST STREET NORTH

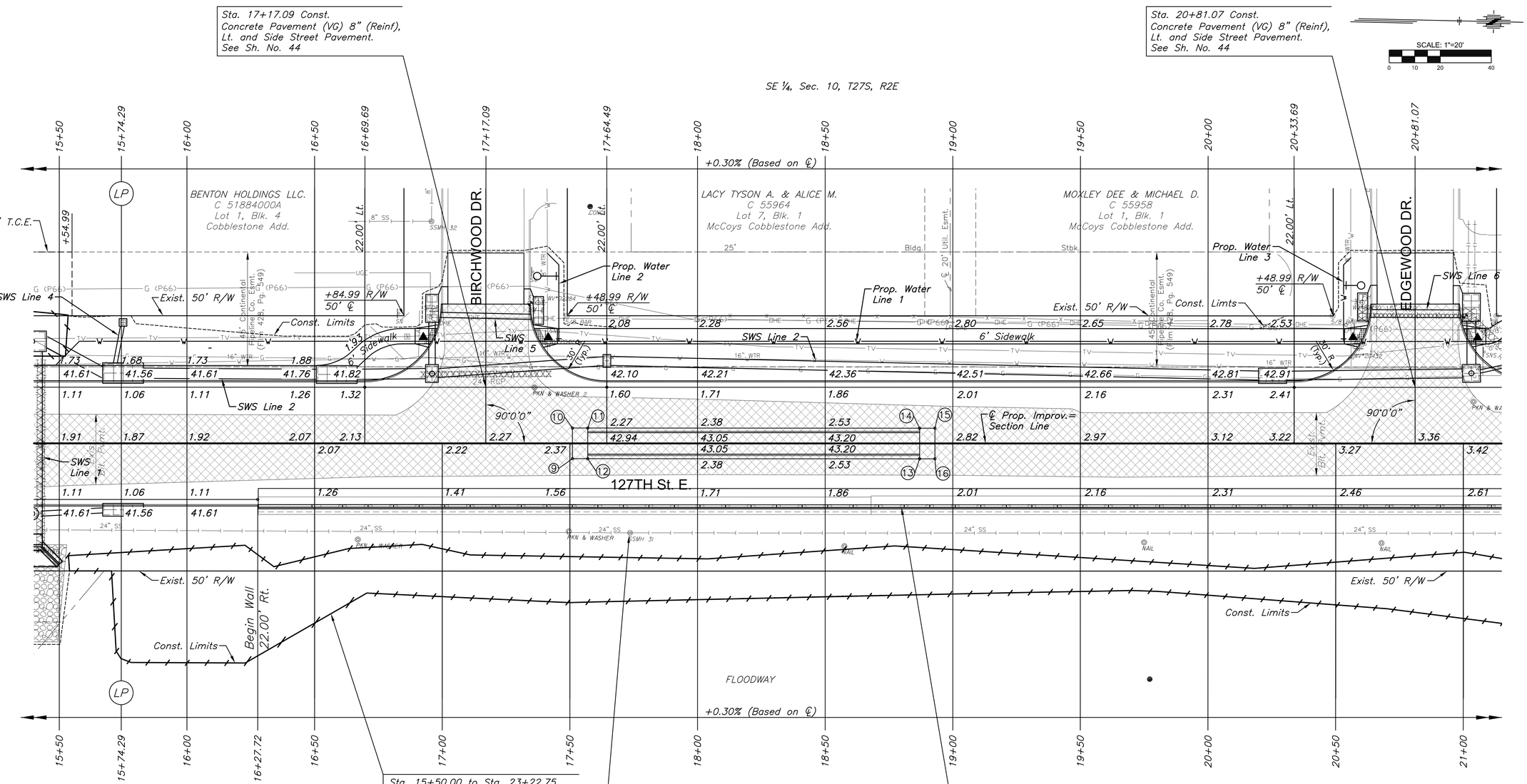

MEDIAN POINTS				
POINT NO.	STATION	OFFSET	TOP CURB ELEVATION	FLOWLINE ELEVATION
9	17+51.00	6.00' Rt.	1342.23	1342.23
10	17+51.00	6.00' Lt.	1342.23	1342.23
11	17+57.00	6.00' Lt.	1342.92	1342.25
12	17+57.00	6.00' Rt.	1342.92	1342.25
13	18+87.00	6.00' Rt.	1343.31	1342.64
14	18+87.00	6.00' Lt.	1343.31	1342.64
15	18+93.00	6.00' Lt.	1342.65	1342.65
16	18+93.00	6.00' Rt.	1342.65	1342.65

BM#2 Chiseled square top of curb in front of a FH at the northwest cor. of 127th street North & Birchwood Dr.
Sta. 17+34.47, 54.79' Lt., Elev.=1342.27 (NAVD 88)

UTILITY ADJUSTMENT TABLE				
STATION	OFFSET	EXIST. ELEV.	PROP. ELEV.	REMARKS
17+44.65	65.55' LT.		1342.85	VALVE BOX ADJUSTED
17+45.65	41.00' LT.		1341.97	VALVE BOX ADJUSTED
17+73.62	35.05' RT.	1340.10	1336.23	MH ADJUSTED, SPECIAL
20+53.03	41.00' LT.		1342.51	VALVE BOX ADJUSTED
20+54.03	61.94' LT.		1343.37	VALVE BOX ADJUSTED

LEGEND

- Pavement Removal
- Construct Wheelchair Ramp See Sh. No. 53
- Tree Removal
- Tree Row Removal
- Tree Area Removal Boundary
- Storm Sewer Removal

©2017
MKEC Engineering
All Rights Reserved
www.mkec.com
These drawings and their contents, including, but not limited to, all concepts, designs, & ideas are the exclusive property of MKEC Engineering (MKEC), and may not be used or reproduced in any way without the express consent of MKEC.

PAVING PLAN
STA. 15+50 TO
STA. 21+00

PROJECT NO.	472-85158
DATE	11/29/17
SCALE	1"=20'

DESIGNED	DRAWN	CHECKED
JRA	WNJ	JRA

NO.	REVISION	DATE

SHEET NO.
6 OF 183

Sh. No. 6

J:\PROJECTS\2014\140104\290 - COW_127TH E 13TH TO 21ST\05-CIVIL\CAD\PAVI\14290EP02.DWG

PLOTTED: Wednesday, November 29, 2017 @ 02:18PM

STATE	PROJECT NO.	YEAR	SHEET NO.	TOTAL SHEETS
KANSAS	87 N-0615-01	2017	7	183

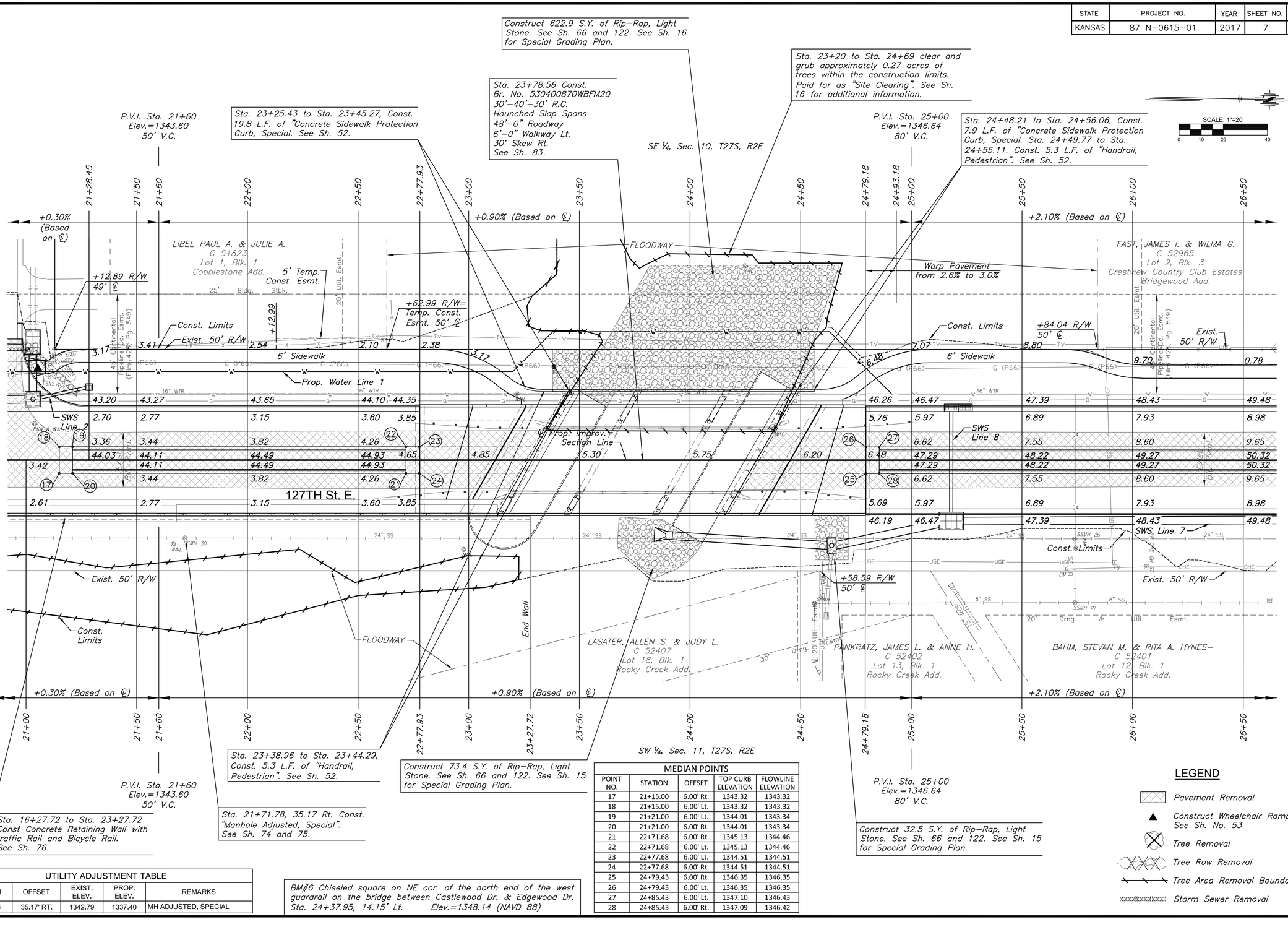

UTILITY ADJUSTMENT TABLE				
STATION	OFFSET	EXIST. ELEV.	PROP. ELEV.	REMARKS
21+71.78	35.17' RT.	1342.79	1337.40	MH ADJUSTED, SPECIAL

BM#6 Chiseled square on NE cor. of the north end of the west guardrail on the bridge between Castlewood Dr. & Edgewood Dr. Sta. 24+37.95, 14.15' Lt. Elev.=1348.14 (NAVD 88)

MEDIAN POINTS				
POINT NO.	STATION	OFFSET	TOP CURB ELEVATION	FLOWLINE ELEVATION
17	21+15.00	6.00' Rt.	1343.32	1343.32
18	21+15.00	6.00' Lt.	1343.32	1343.32
19	21+21.00	6.00' Lt.	1344.01	1343.34
20	21+21.00	6.00' Rt.	1344.01	1343.34
21	22+71.68	6.00' Rt.	1345.13	1344.46
22	22+71.68	6.00' Lt.	1345.13	1344.46
23	22+77.68	6.00' Lt.	1344.51	1344.51
24	22+77.68	6.00' Rt.	1344.51	1344.51
25	24+79.43	6.00' Rt.	1346.35	1346.35
26	24+79.43	6.00' Lt.	1346.35	1346.35
27	24+85.43	6.00' Lt.	1347.10	1346.43
28	24+85.43	6.00' Rt.	1347.09	1346.42

LEGEND

- Pavement Removal
- Construct Wheelchair Ramp See Sh. No. 53
- Tree Removal
- Tree Row Removal
- Tree Area Removal Boundary
- Storm Sewer Removal

MKEC
Wichita, KS • 316-684-9600

STREET IMPROVEMENTS FOR

127TH STREET EAST

FROM 13TH STREET NORTH TO 21ST STREET NORTH

©2017 MKEC Engineering All Rights Reserved www.mkec.com
These drawings and their contents, including, but not limited to, all concepts, designs, & ideas are the exclusive property of MKEC Engineering (MKEC) and may not be used or reproduced in any way without the express consent of MKEC.

PAVING PLAN
STA. 21+00 TO
STA. 26+50

PROJECT NO.	472-85158
DATE	11/29/17
SCALE	1"=20'

DESIGNED	DRAWN	CHECKED
JRA	WNJ	JRA

NO.	REVISION	DATE

SHEET NO.
7 OF 183

Sh. No. 7

J:\PROJECTS\2014\1401940290 - COW_127TH E 13TH TO 21ST\06-CIVIL\CAD\PAVI~1\4290EP03.DWG

PLOTTED: Wednesday, November 29, 2017 @ 02:18PM

STATE	PROJECT NO.	YEAR	SHEET NO.	TOTAL SHEETS
KANSAS	87 N-0615-01	2017	8	183

MKEC
Wichita, KS • 316-684-9600

STREET IMPROVEMENTS FOR 127TH STREET EAST
FROM 13TH STREET NORTH TO 21ST STREET NORTH

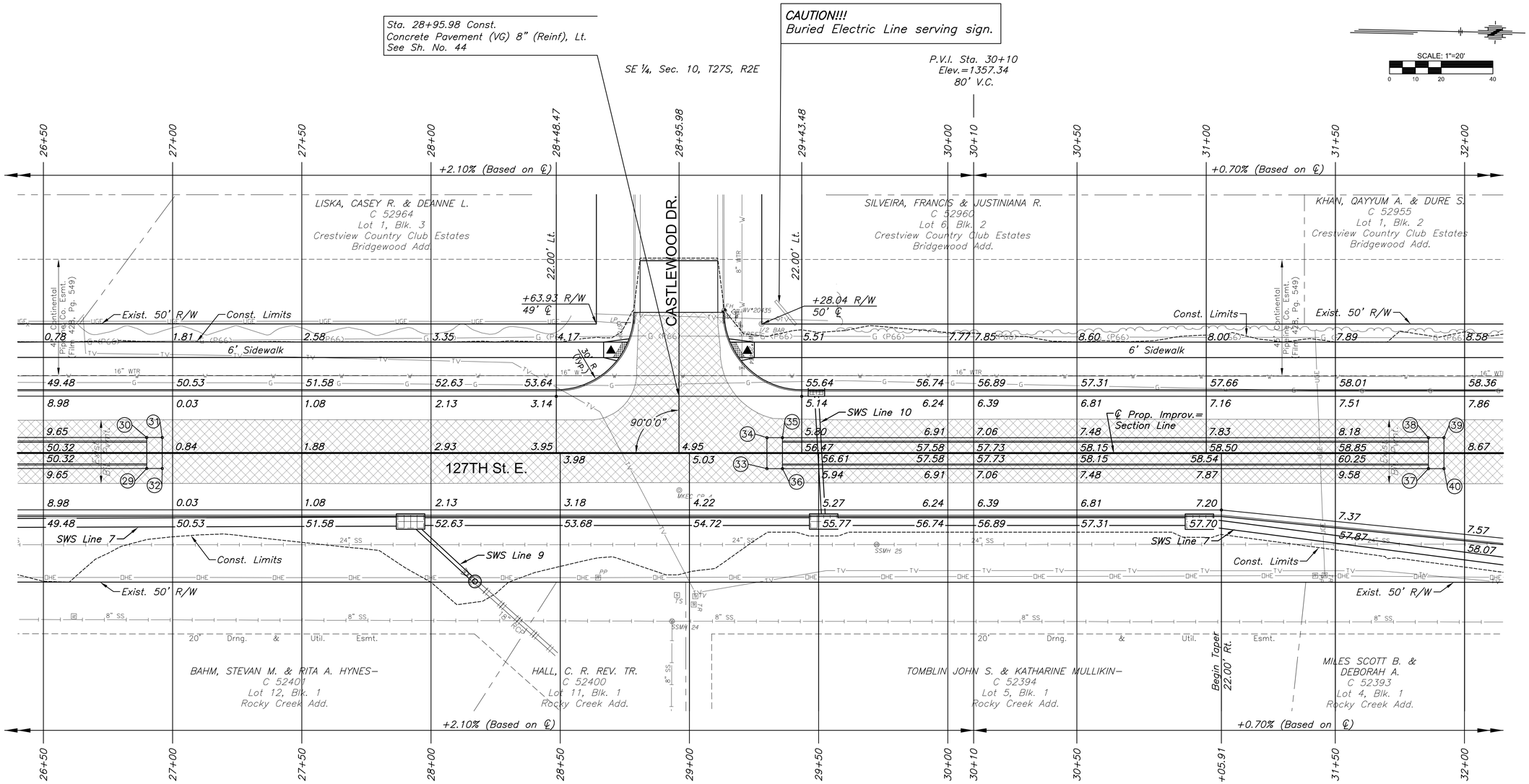

MEDIAN POINTS				
POINT NO.	STATION	OFFSET	TOP CURB ELEVATION	FLOWLINE ELEVATION
29	26+90.00	6.00' Rt.	1351.15	1350.48
30	26+90.00	6.00' Lt.	1351.15	1350.48
31	26+96.00	6.00' Lt.	1350.61	1350.61
32	26+96.00	6.00' Rt.	1350.61	1350.61
33	29+30.00	6.00' Rt.	1355.52	1355.52
34	29+30.00	6.00' Lt.	1355.52	1355.52
35	29+36.00	6.00' Lt.	1356.31	1355.64
36	29+36.00	6.00' Rt.	1356.31	1355.64
37	31+86.00	6.00' Rt.	1359.10	1358.43
38	31+86.00	6.00' Lt.	1359.10	1358.43
39	31+92.00	6.00' Lt.	1358.47	1358.47
40	31+92.00	6.00' Rt.	1358.47	1358.47

BM#4 Chiseled square on top of curb in front of FH at the NW cor. of 127th Street North & Castlewood Dr.
Sta. 29+13.45, 55.14' Lt., Elev.=1354.405 (NAVD 88)

UTILITY ADJUSTMENT TABLE				
STATION	OFFSET	EXIST. ELEV.	PROP. ELEV.	REMARKS
29+20.33	32.98' LT.		1354.49	VALVE BOX ADJUSTED

LEGEND

- Pavement Removal
- Construct Wheelchair Ramp See Sh. No. 53
- Tree Removal
- Tree Row Removal
- Tree Area Removal Boundary
- Storm Sewer Removal

©2017
MKEC Engineering
All Rights Reserved
www.mkec.com
These drawings and their contents, including, but not limited to, all concepts, designs, & ideas are the exclusive property of MKEC Engineering (MKEC), and may not be used or reproduced in any way without the express consent of MKEC.

PAVING PLAN STA. 26+50 TO STA. 32+00

PROJECT NO.	472-85158
DATE	11/29/17
SCALE	1"=20'

DESIGNED	DRAWN	CHECKED
JRA	WNJ	JRA

NO.	REVISION	DATE

SHEET NO.
8 OF 183

Sh. No. 8

J:\PROJECTS\2014\1401040280 - CGW_127TH E 13TH TO 21ST\05-CIVIL\CAD\PAVY1429dEP04.DWG

PLOTTED: Wednesday, November 29, 2017 @ 02:19PM

W ¼ Cor. Sec. 11, T27S, R2E
Sta. 36+48.50, 0.00' Rt.
1. Found ½" rebar with 2" alum. cap stamped "MKEC CKS 39"
2. PK nail & MKEC disc in N fc of PP — 49.40' ENE
3. Concrete nail & washer in S fc of meter pole — 49.68' NE
4. 60d nail in W fc of S leg of H pole structure — 98.93' NNE
5. Mag nail in top of guard post — 47.55' SW
6. N=1697209.960, E=1691551.888

PI Sta. 36+48.50, 127th St. E.
1. N=1697209.960, E=1691551.888

STATE	PROJECT NO.	YEAR	SHEET NO.	TOTAL SHEETS
KANSAS	87 N-0615-01	2017	9	183

MKEC
Wichita, KS • 316-684-9600

SCALE: 1"=20'
0 10 20 40

STREET IMPROVEMENTS FOR
127TH STREET EAST
FROM 13TH STREET NORTH TO 21ST STREET NORTH

Sta. 33+01.60, 35.12' Rt. Remove existing manhole cone and replace with on eccentric cone to avoid curb. Paid for as "MH Reconstructed". Adjustment is paid for separately. See Sh. 73.

CAUTION!!!
Buried Electric Line serving sign.

SE ¼, Sec. 10, T27S, R2E

Sta. 33+79.93 Const.
Concrete Pavement (VG) 8" (Reinf), Lt. and Side Street Pavement.
See Sh. No. 44

P.V.I. Sta. 34+00
Elev.=1360.07
150' V.C.

P.V.I. Sta. 35+75
Elev.=1365.32
170' V.C.

Sta. 36+30.56, 28.0' Lt. Install Solar Panel Signal Pedestal and Base.
See Sh. No. 127

Sta. 36+48.50, 0.0' Rt.
W ¼ Cor. Sec. 11, T27S, R2E

NE ¼, Sec. 10, T27S, R2E

32+00 32+50 33+00 33+32.38 33+79.93 34+00 34+27.48 34+50 35+00 35+50 35+75 36+00 36+39.95 36+50 37+00 37+50

+0.70% (Based on ℄) +3.00% (Based on ℄) −0.40% (Based on ℄)

KHAN, QAYYUM A. & DURE S.
C 52955
Lot 1, Blk. 2
Crestview Country Club Estates
Bridgewood Add.

BLACKLOCK KIRK A. & GRETCHEN M.
C 52938
Lot 1, Blk. 1
Crestview Country Club Estates
Bridgewood Add.

LAKESIDE COURT LLC.
C 52906
Part of Lot 1, Blk. 1
Lakeside Acres, 1st Add.

22.00' Lt. 22.00' Lt.

TALLOWOOD DR. REDBUD TRAIL

45' Continental Pipeline Co. Esmt. (Firm 428, Pg. 549)

10' Temp. Const. Esmt. +48.58 R/W= Temp. Const. Esmt. 50' ℄ +98.58

Const. Limits Exist. 50' R/W
+48.04 R/W 50' ℄
+12.04 R/W 50' ℄
+72.04 R/W 50' ℄
+92.86

6' Sidewalk

| | | |

PLOTTED: Wednesday, November 29, 2017 @ 02:20PM

STATE	PROJECT NO.	YEAR	SHEET NO.	TOTAL SHEETS
KANSAS	87 N-0615-01	2017	10	183

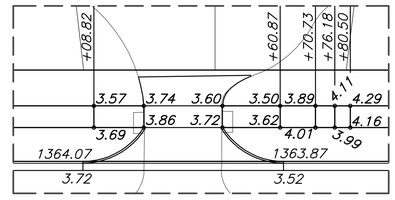

SPECIAL GRADING "A"

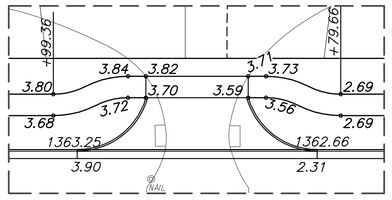

SPECIAL GRADING "B"

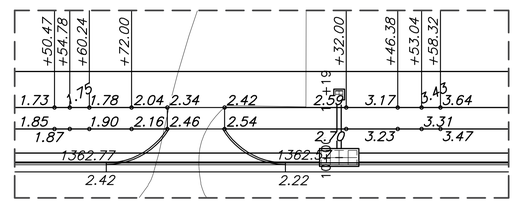

SPECIAL GRADING "C"

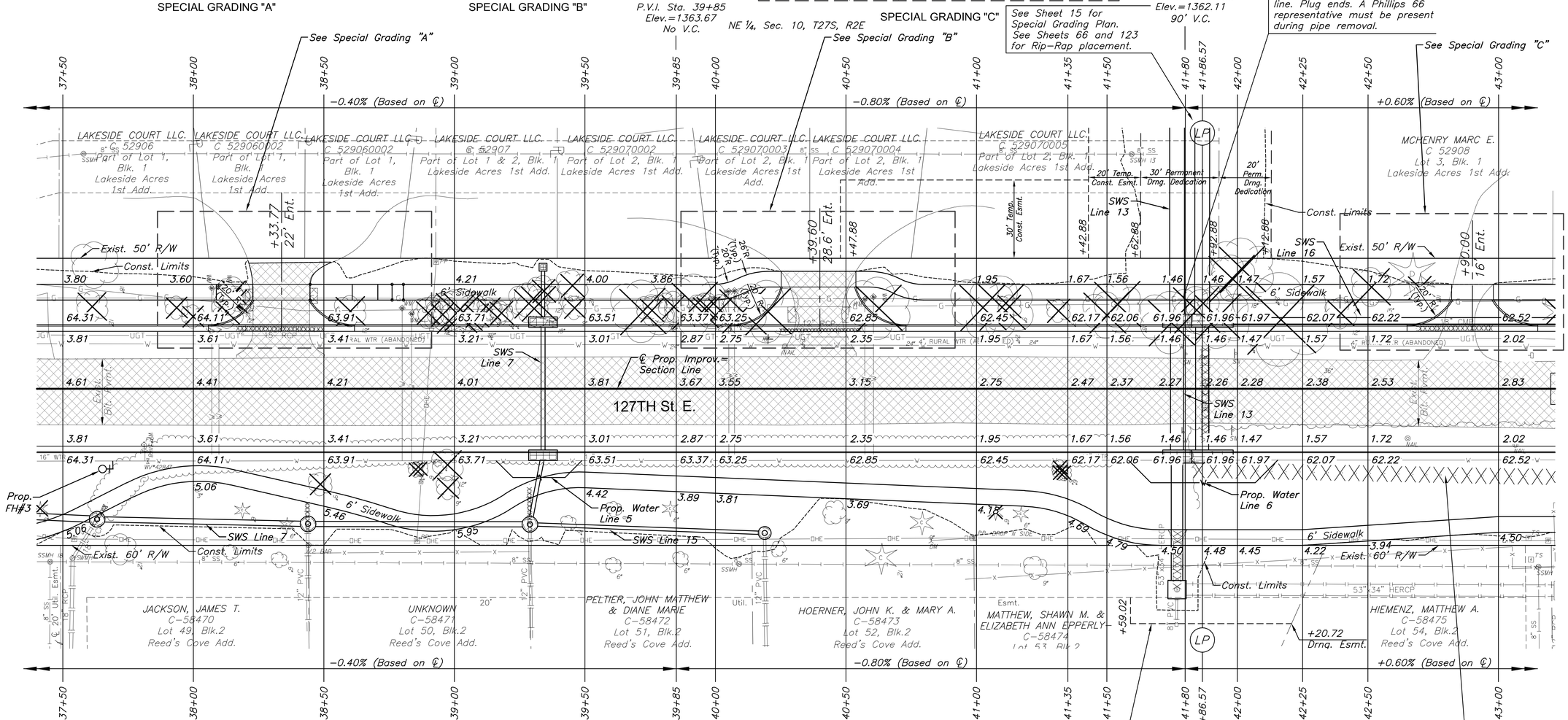

UTILITY ADJUSTMENT TABLE

STATION	OFFSET	EXIST. ELEV.	PROP. ELEV.	REMARKS
37+68.06	30.74' RT.		1364.46	VALVE BOX ADJUSTED
37+82.58	27.70' RT.		1364.46	VALVE BOX ADJUSTED
38+07.07	38.66' LT.	1363.27		WATER METER RELOCATED
38+09.81	39.32' LT.	1363.44		WATER METER RELOCATED
38+80.02	30.92' LT.	1362.25		WATER METER RELOCATED
38+83.62	28.80' LT.	1361.86		WATER METER RELOCATED
40+05.11	37.33' LT.	1362.6		WATER METER RELOCATED
40+07.32	37.55' LT.	1362.61		WATER METER RELOCATED
40+57.23	34.27' LT.	1363.62		WATER METER RELOCATED
40+60.57	35.24' LT.	1363.65		WATER METER RELOCATED
41+59.47	89.91' LT.	1360.76	1361.14	MH ADJUSTED

LEGEND

- Pavement Removal
- Construct Wheelchair Ramp See Sh. No. 53
- Tree Removal
- Tree Row Removal
- Tree Area Removal
- Storm Sewer Removal

SCALE: 1"=20'

MKEC
Wichita, KS • 316-684-9600

STREET IMPROVEMENTS FOR

127TH STREET EAST

FROM 13TH STREET NORTH TO 21ST STREET NORTH

©2017
MKEC Engineering
All Rights Reserved
www.mkec.com
These drawings and their contents, including, but not limited to, all concepts, designs, & ideas are the exclusive property of MKEC Engineering (MKEC), and may not be used or reproduced in any way without the express consent of MKEC.

PAVING PLAN
STA. 37+50 TO
STA. 43+00

PROJECT NO.	472-85158
DATE	11/29/17
SCALE	1"=20'

DESIGNED	DRAWN	CHECKED
JRA	WNJ	JRA

NO.	REVISION	DATE

SHEET NO.

10 OF 183

Sh. No. 10

J:\PROJECTS\2014\1401040290 - COW_127TH E 13TH TO 21ST\05-CIVIL\CAD\PAV\1429DEP06.DWG

PLOTTED: Wednesday, November 29, 2017 @ 02:20PM

STATE	PROJECT NO.	YEAR	SHEET NO.	TOTAL SHEETS
KANSAS	87 N-0615-01	2017	11	183

MKEC
Wichita, KS • 316-684-9600

STREET IMPROVEMENTS FOR 127TH STREET EAST

FROM 13TH STREET NORTH TO 21ST STREET NORTH

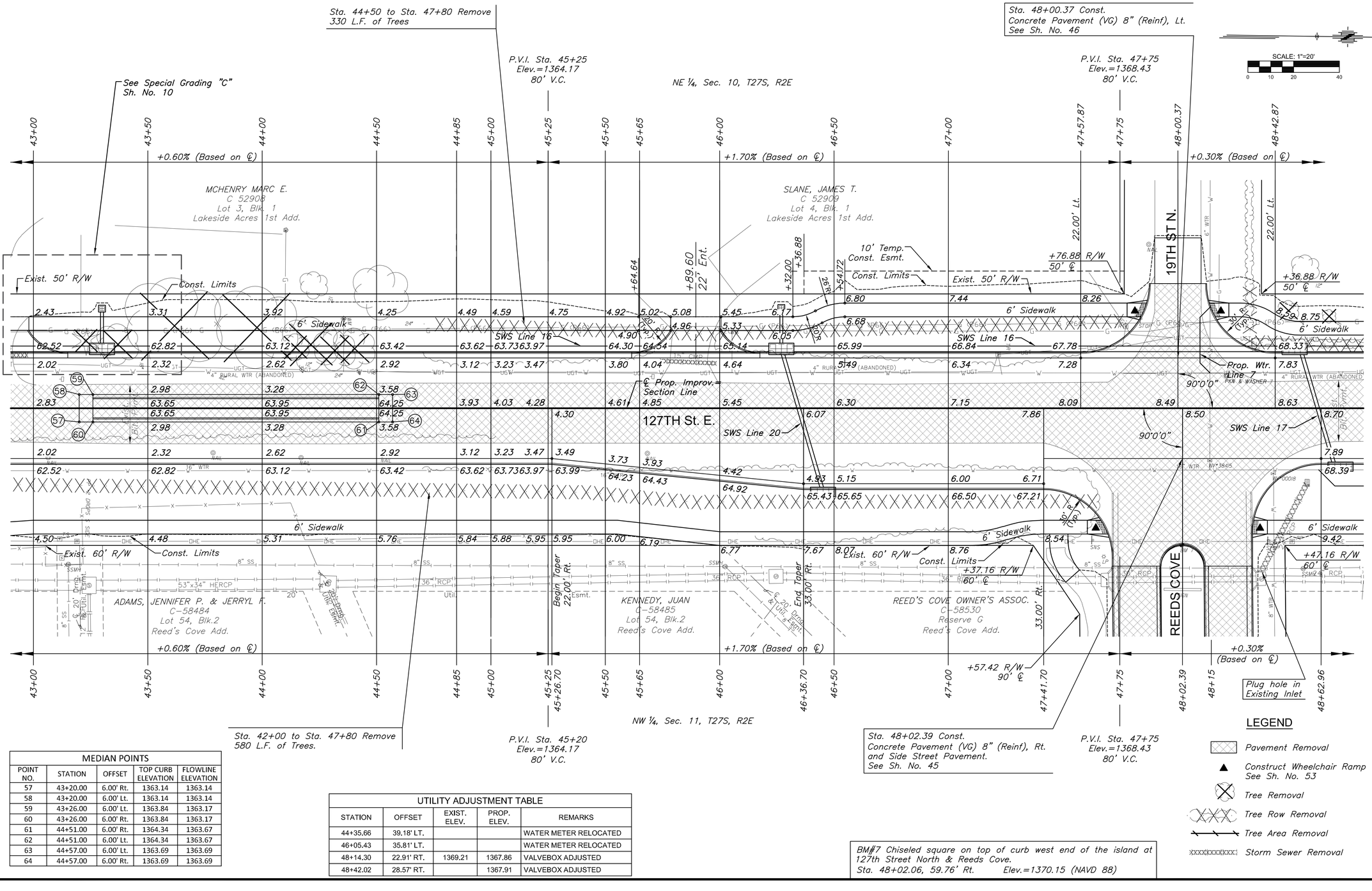

LEGEND

- Pavement Removal
- Construct Wheelchair Ramp See Sh. No. 53
- Tree Removal
- Tree Row Removal
- Tree Area Removal
- Storm Sewer Removal

MEDIAN POINTS				
POINT NO.	STATION	OFFSET	TOP CURB ELEVATION	FLOWLINE ELEVATION
57	43+20.00	6.00' Rt.	1363.14	1363.14
58	43+20.00	6.00' Lt.	1363.14	1363.14
59	43+26.00	6.00' Lt.	1363.84	1363.17
60	43+26.00	6.00' Rt.	1363.84	1363.17
61	44+51.00	6.00' Rt.	1364.34	1363.67
62	44+51.00	6.00' Lt.	1364.34	1363.67
63	44+57.00	6.00' Lt.	1363.69	1363.69
64	44+57.00	6.00' Rt.	1363.69	1363.69

UTILITY ADJUSTMENT TABLE				
STATION	OFFSET	EXIST. ELEV.	PROP. ELEV.	REMARKS
44+35.66	39.18' LT.			WATER METER RELOCATED
46+05.43	35.81' LT.			WATER METER RELOCATED
48+14.30	22.91' RT.	1369.21	1367.86	VALVEBOX ADJUSTED
48+42.02	28.57' RT.		1367.91	VALVEBOX ADJUSTED

BM#7 Chiseled square on top of curb west end of the island at 127th Street North & Reeds Cove.
Sta. 48+02.06, 59.76' Rt. Elev.=1370.15 (NAVD 88)

©2017
MKEC Engineering
All Rights Reserved
www.mkec.com
These drawings and their contents, including, but not limited to, all concepts, designs, & ideas are the exclusive property of MKEC Engineering (MKEC), and may not be used or reproduced in any way without the express consent of MKEC.

PAVING PLAN
STA. 43+00 TO
STA. 48+50

PROJECT NO.	472-85158
DATE	11/29/17
SCALE	1"=20'

DESIGNED	DRAWN	CHECKED
JRA	WNJ	JRA

NO.	REVISION	DATE

SHEET NO.
11 OF 183

Sh. No. 11

J:\PROJECTS\2014\140104\09\0 - COV_ 127TH E 13TH TO 21ST\05-CIVIL\CAD\PAV\140926EP07.DWG

PLOTTED: Wednesday, November 29, 2017 @ 02:21PM

STATE	PROJECT NO.	YEAR	SHEET NO.	TOTAL SHEETS
KANSAS	87 N-0615-01	2017	12	183

MKEC
Wichita, KS • 316-684-9600

SCALE: 1"=20'
0 10 20 40

STREET IMPROVEMENTS FOR 127TH STREET EAST
FROM 13TH STREET NORTH TO 21ST STREET NORTH

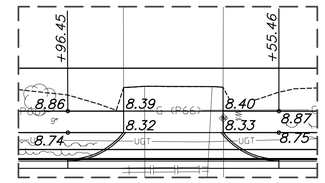

SPECIAL GRADING "D"

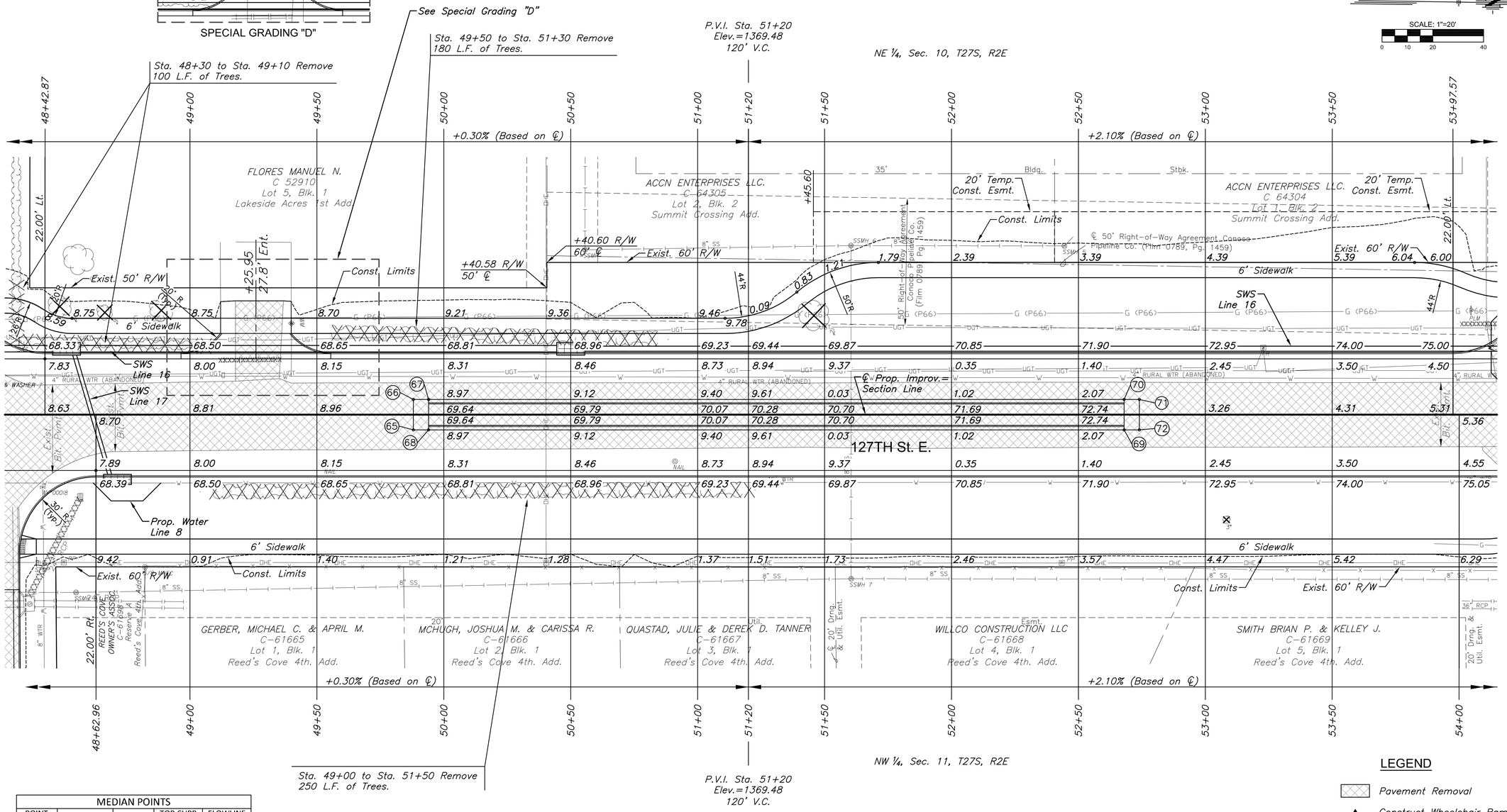

MEDIAN POINTS				
POINT NO.	STATION	OFFSET	TOP CURB ELEVATION	FLOWLINE ELEVATION
65	49+88.00	6.00' Rt.	1368.93	1368.93
66	49+88.00	6.00' Lt.	1368.93	1368.93
67	49+94.00	6.00' Lt.	1369.62	1368.95
68	49+94.00	6.00' Rt.	1369.62	1368.95
69	52+68.00	6.00' Rt.	1373.11	1372.44
70	52+68.00	6.00' Lt.	1373.11	1372.44
71	52+74.00	6.00' Lt.	1372.57	1372.57
72	52+74.00	6.00' Rt.	1372.57	1372.57

UTILITY ADJUSTMENT TABLE				
STATION	OFFSET	EXIST. ELEV.	PROP. ELEV.	REMARKS
49+39.99	36.02' LT.			WATER METER RELOCATED
52+44.45	66.51' LT.	1371.18	1372.6	MH ADJUSTED

LEGEND

- Pavement Removal
- Construct Wheelchair Ramp See Sh. No. 53
- Tree Removal
- Tree Row Removal
- Tree Area Removal
- Storm Sewer Removal

©2017
MKEC Engineering
All Rights Reserved
www.mkec.com
These drawings and their contents, including, but not limited to, all concepts, designs, & ideas are the exclusive property of MKEC Engineering (MKEC), and may not be used or reproduced in any way without the express consent of MKEC.

PAVING PLAN
STA. 48+50 TO
STA. 54+00

PROJECT NO.	472-85158
DATE	11/29/17
SCALE	1"=20'

DESIGNED	DRAWN	CHECKED
JRA	WNJ	JRA

NO.	REVISION	DATE

SHEET NO.
12 OF 183

Sh. No. 12

J:\PROJECTS\2014\140104260 - COV_-127TH E 13TH TO 21ST\05-CIVIL\CAD\PAV\1426EPKB.DWG

PLOTTED: Wednesday, November 29, 2017 @ 02:21PM

STATE	PROJECT NO.	YEAR	SHEET NO.	TOTAL SHEETS
KANSAS	87 N-0615-01	2017	13	183

MKEC
Wichita, KS • 316-684-9600

SCALE: 1"=20'
0 10 20 40

STREET IMPROVEMENTS FOR
127TH STREET EAST
FROM 13TH STREET NORTH TO 21ST STREET NORTH

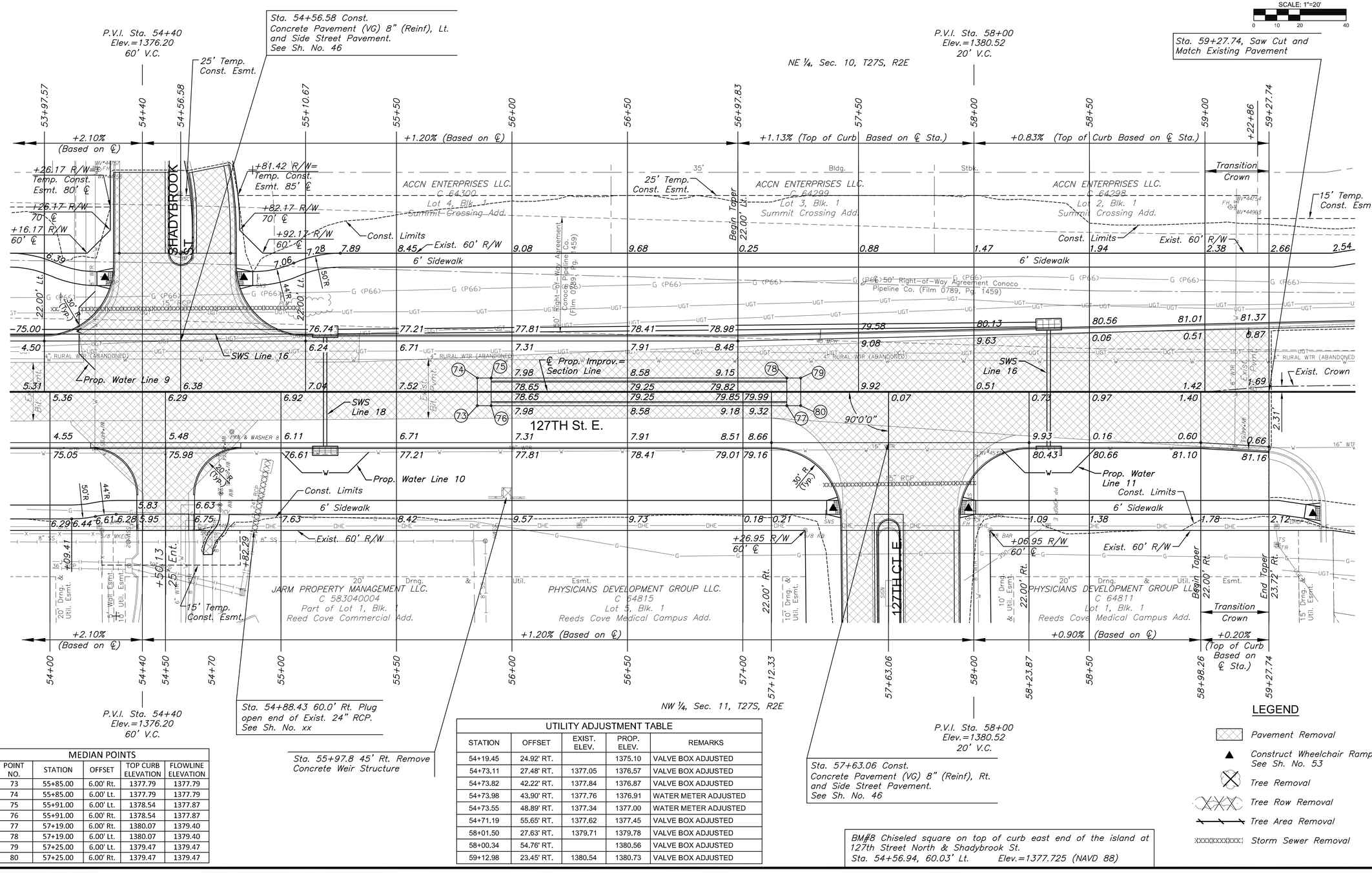

P.V.I. Sta. 54+40
Elev.=1376.20
60' V.C.

Sta. 54+88.43 60.0' Rt. Plug open end of Exist. 24" RCP. See Sh. No. xx

Sta. 55+97.8 45' Rt. Remove Concrete Weir Structure

NW ¼, Sec. 11, T27S, R2E

P.V.I. Sta. 58+00
Elev.=1380.52
20' V.C.

Sta. 57+63.06 Const.
Concrete Pavement (VG) 8" (Reinf), Rt.
and Side Street Pavement.
See Sh. No. 46

BM#8 Chiseled square on top of curb east end of the island at 127th Street North & Shadybrook St.
Sta. 54+56.94, 60.03' Lt. Elev.=1377.725 (NAVD 88)

MEDIAN POINTS

POINT NO.	STATION	OFFSET	TOP CURB ELEVATION	FLOWLINE ELEVATION
73	55+85.00	6.00' Rt.	1377.79	1377.79
74	55+85.00	6.00' Lt.	1377.79	1377.79
75	55+91.00	6.00' Lt.	1378.54	1377.87
76	55+91.00	6.00' Rt.	1378.54	1377.87
77	57+19.00	6.00' Rt.	1380.07	1379.40
78	57+19.00	6.00' Lt.	1380.07	1379.40
79	57+25.00	6.00' Lt.	1379.47	1379.47
80	57+25.00	6.00' Rt.	1379.47	1379.47

UTILITY ADJUSTMENT TABLE

STATION	OFFSET	EXIST. ELEV.	PROP. ELEV.	REMARKS
54+19.45	24.92' RT.		1375.10	VALVE BOX ADJUSTED
54+73.11	27.48' RT.	1377.05	1376.57	VALVE BOX ADJUSTED
54+73.82	42.22' RT.	1377.84	1376.87	VALVE BOX ADJUSTED
54+73.98	43.90' RT.	1377.76	1376.91	WATER METER ADJUSTED
54+73.55	48.89' RT.	1377.34	1377.00	WATER METER ADJUSTED
54+71.19	55.65' RT.	1377.62	1377.45	VALVE BOX ADJUSTED
58+01.50	27.63' RT.	1379.71	1379.78	VALVE BOX ADJUSTED
58+00.34	54.76' RT.		1380.56	VALVE BOX ADJUSTED
59+12.98	23.45' RT.	1380.54	1380.73	VALVE BOX ADJUSTED

LEGEND

- Pavement Removal
- Construct Wheelchair Ramp See Sh. No. 53
- Tree Removal
- Tree Row Removal
- Tree Area Removal
- Storm Sewer Removal

©2017
MKEC Engineering
All Rights Reserved
www.mkec.com
These drawings and their contents, including, but not limited to, all concepts, designs, & ideas are the exclusive property of MKEC Engineering (MKEC), and may not be used or reproduced in any way without the express consent of MKEC.

PAVING PLAN
STA. 54+00 TO
STA. 59+27.74

PROJECT NO.	472-85158
DATE	11/29/17
SCALE	1"=20'

DESIGNED	DRAWN	CHECKED
JRA	WNJ	JRA

NO.	REVISION	DATE

SHEET NO.
13 OF 183

Sh. No. 13

J:\PROJECTS\2014\140104260 - COV_\127TH E 13TH TO 21ST\05-CIVIL\CAD\PAV\1426EP00.DWG

PLOTTED: Wednesday, November 29, 2017 @ 02:22PM

NW Cor. Sec. 11, T27S, R2E
Sta. 63+04.80, 0.00' Rt.
1. Found ½" pipe in thimble
2. City of Wichita BM disc in conc. traffic signal base — 70.98' NE
3. Chiseled "X" on top of curb — 68.00' SE
4. Chiseled "X" on top of curb — 69.17' NW
5. Chiseled "X" on top of curb — 68.57' SW
6. N=1699865.966, E=1691512.073

PI Sta. 63+04.80, 127th St. E.
1. N=1699865.966, E=1691512.073

STATE	PROJECT NO.	YEAR	SHEET NO.	TOTAL SHEETS
KANSAS	87 N-0615-01	2017	14	183

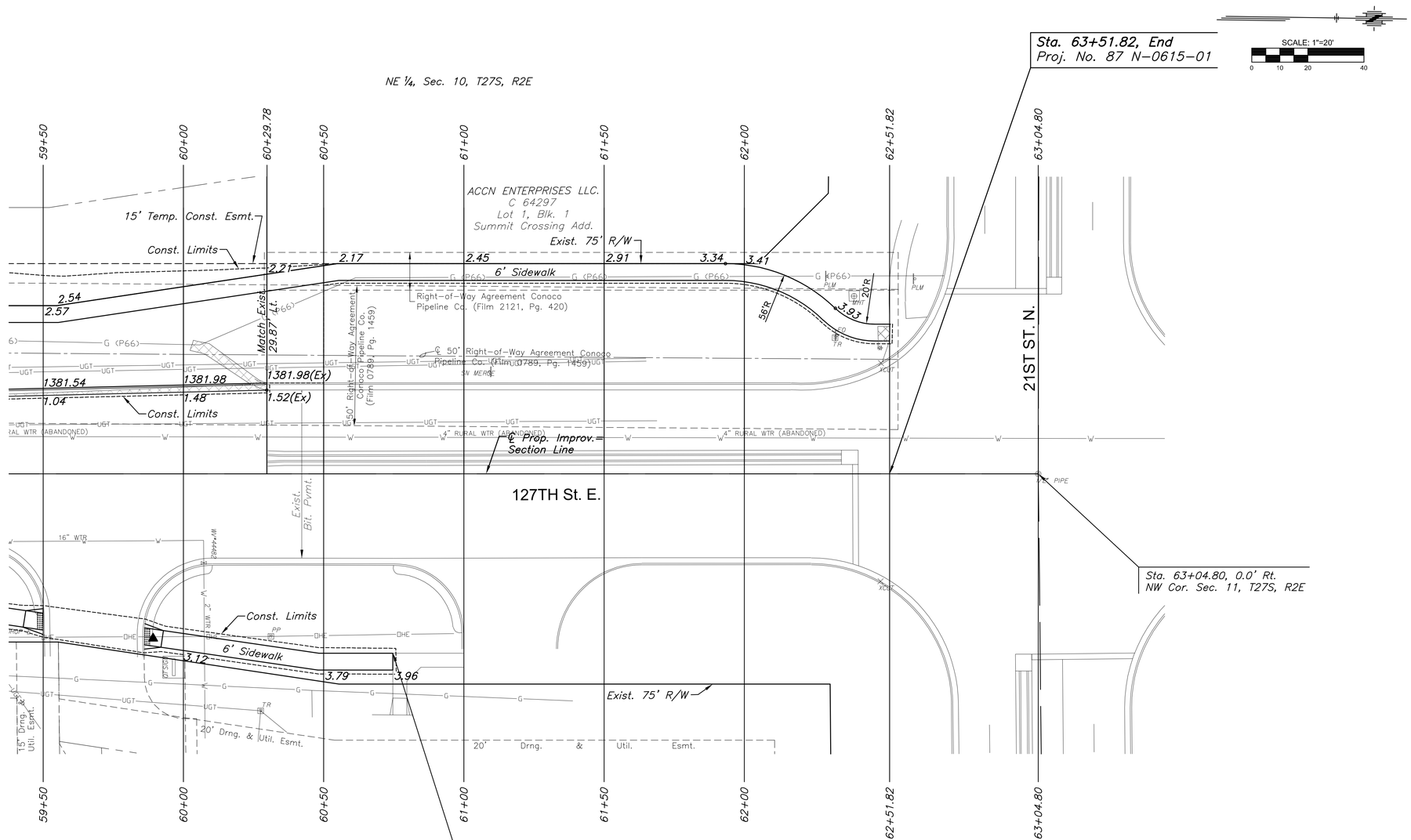

LEGEND

- Pavement Removal
- Construct Wheelchair Ramp See Sh. No. 53
- Tree Removal
- Tree Row Removal
- Tree Area Removal
- Storm Sewer Removal

MKEC
Wichita, KS • 316-684-9600

STREET IMPROVEMENTS FOR

127TH STREET EAST

FROM 13TH STREET NORTH TO 21ST STREET NORTH

©2017
MKEC Engineering
All Rights Reserved
www.mkec.com
These drawings and their contents, including, but not limited to, all concepts, designs, & ideas are the exclusive property of MKEC Engineering (MKEC), and may not be used or reproduced in any way without the express consent of MKEC.

PAVING PLAN
STA. 59+50 TO
STA. 63+04.80

PROJECT NO.	472-85158
DATE	11/29/17
SCALE	1"=20'

DESIGNED	DRAWN	CHECKED
JRA	WNJ	JRA

NO.	REVISION	DATE

SHEET NO.

14 OF 183

Sh. No. 14

J:\PROJECTS\2014\1401040290 - COW_127TH E 13TH TO 21ST\05-CIVIL\CAD\PAV\1420EP10.DWG

PLOTTED: Wednesday, November 29, 2017 @ 02:22PM

STATE	PROJECT NO.	YEAR	SHEET NO.	TOTAL SHEETS
KANSAS	87 N-0615-01	2017	15	183

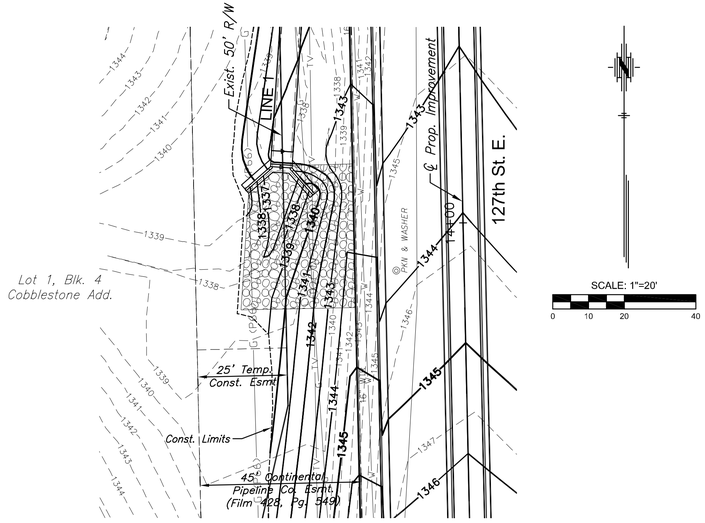

SPECIAL GRADING PLAN - STA. 13+40 to STA. 14+40, LT.

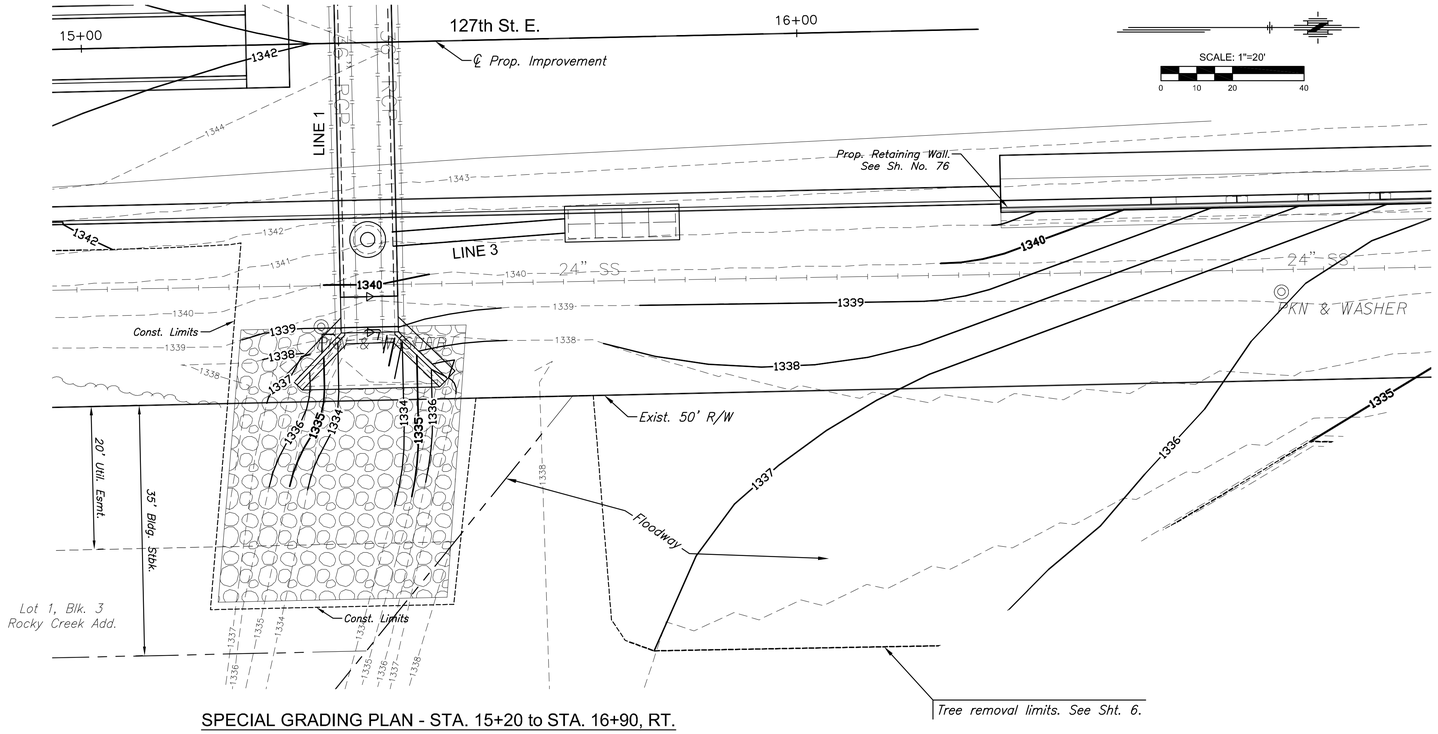

SPECIAL GRADING PLAN - STA. 15+20 to STA. 16+90, RT.

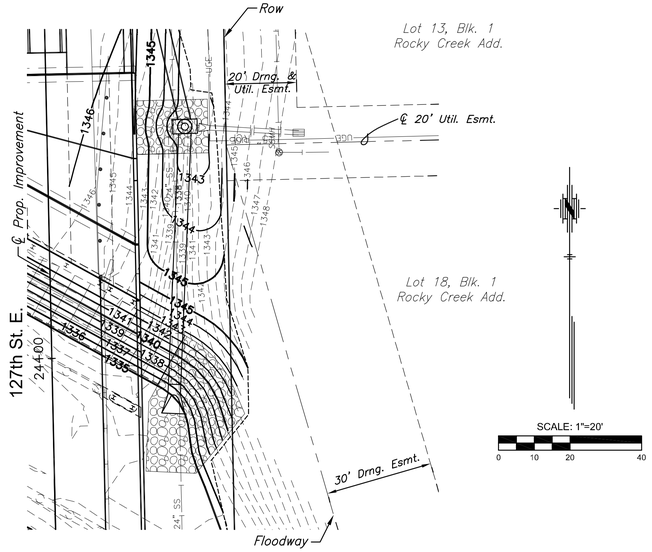

SPECIAL GRADING PLAN - STA. 23+80 to STA. 24+80, RT.

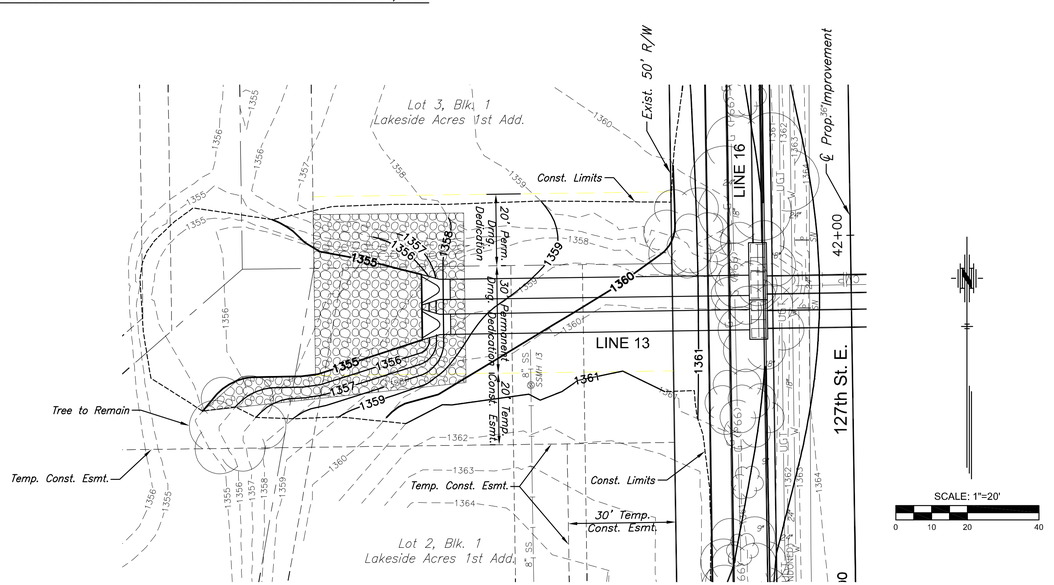

SPECIAL GRADING PLAN - STA. 41+50 to STA. 42+10, LT.

MKEC
Wichita, KS • 316-684-9600

STREET IMPROVEMENTS FOR

127TH STREET EAST

FROM 13TH STREET NORTH TO 21ST STREET NORTH

©2017
MKEC Engineering
All Rights Reserved
www.mkec.com
These drawings and their contents, including, but not limited to, all concepts, designs, & ideas are the exclusive property of MKEC Engineering (MKEC), and may not be used or reproduced in any way without the express consent of MKEC.

SPECIAL GRADING PLAN

PROJECT NO.	472-85158
DATE	11/29/17
SCALE	1"=20'

DESIGNED	DRAWN	CHECKED
JRA	RAM	JRA

NO.	REVISION	DATE

SHEET NO.

15 OF 183

Sh. No. 15

J:\PROJECTS\2014\140104\269 - COW_127TH E 13TH TO 21ST\05-CIVIL\CAD\GRD\142609GP01.DWG

PLOTTED: Wednesday, November 29, 2017 @ 02:23PM

STATE	PROJECT NO.	YEAR	SHEET NO.	TOTAL SHEETS
KANSAS	87 N-0615-01	2017	16	183

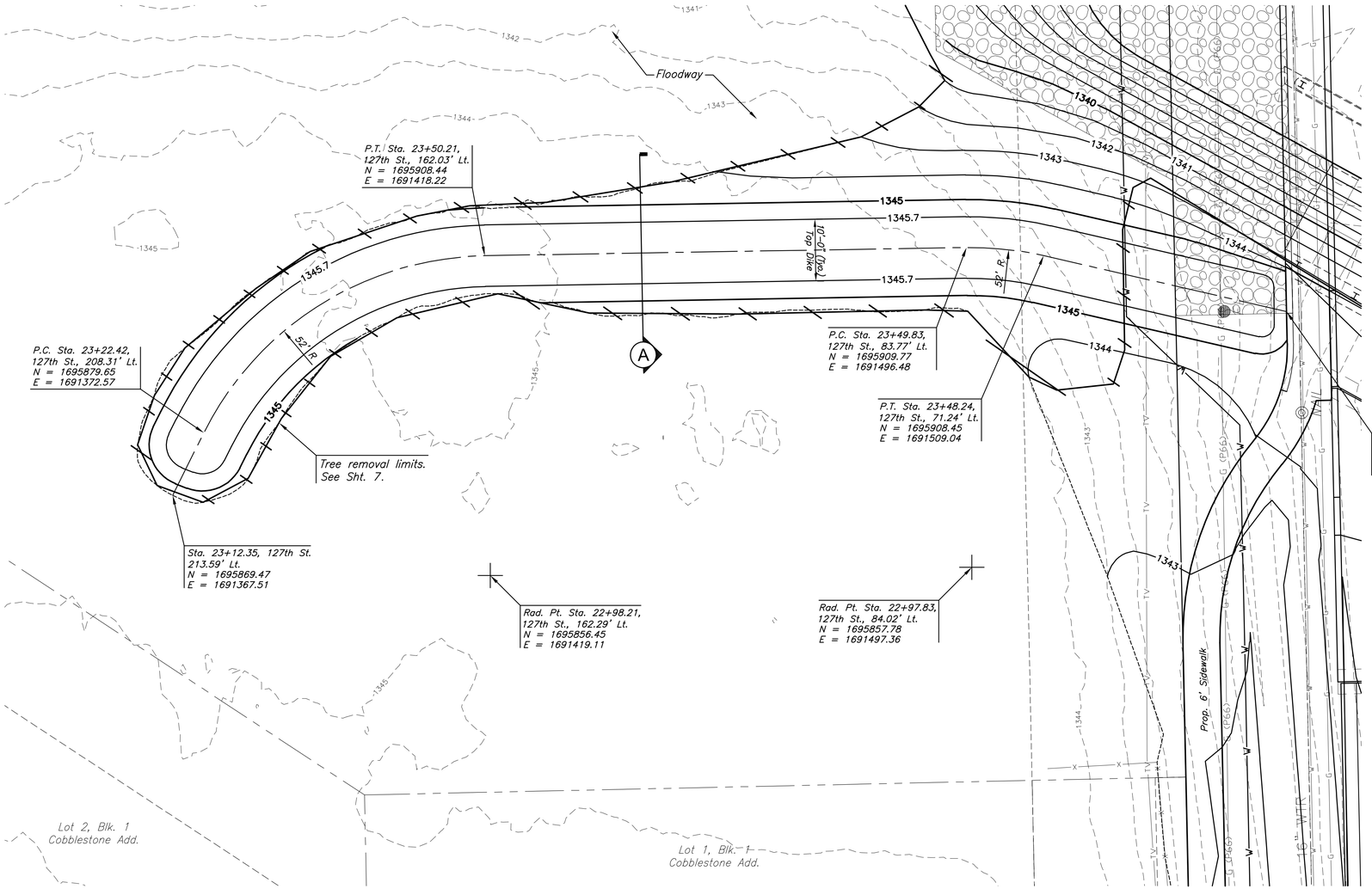

SPECIAL GRADING PLAN - STA. 23+50
WING DIKE (WEST OF BRIDGE)

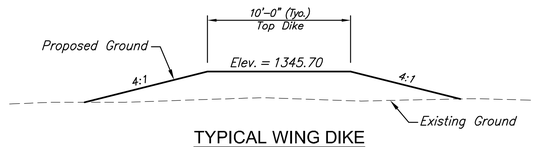

TYPICAL WING DIKE
SECTION A

MKEC
Wichita, KS • 316-684-9600

STREET IMPROVEMENTS FOR

127TH STREET EAST

FROM 13TH STREET NORTH TO 21ST STREET NORTH

©2017
MKEC Engineering
All Rights Reserved
www.mkec.com
These drawings and their contents, including, but not limited to, all concepts, designs, & ideas are the exclusive property of MKEC Engineering (MKEC), and may not be used or reproduced in any way without the express consent of MKEC.

SPECIAL GRADING PLAN

PROJECT NO.	472-85158
DATE	11/29/17
SCALE	1"=10'

DESIGNED	DRAWN	CHECKED
JRA	DMU	JRA

NO.	REVISION	DATE

SHEET NO.

16 OF 183

Sh. No. 16

J:\PROJECTS\2014\1401040\09 - CONS_127TH E 13TH TO 21ST\05-CIVIL\CAD\GRD\142905Pl02.DWG

PLOTTED: Wednesday, November 29, 2017 @ 02:23PM

STATE	PROJECT NO.	YEAR	SHEET NO.	TOTAL SHEETS
KANSAS	87 N-0615-01	2017	17	183

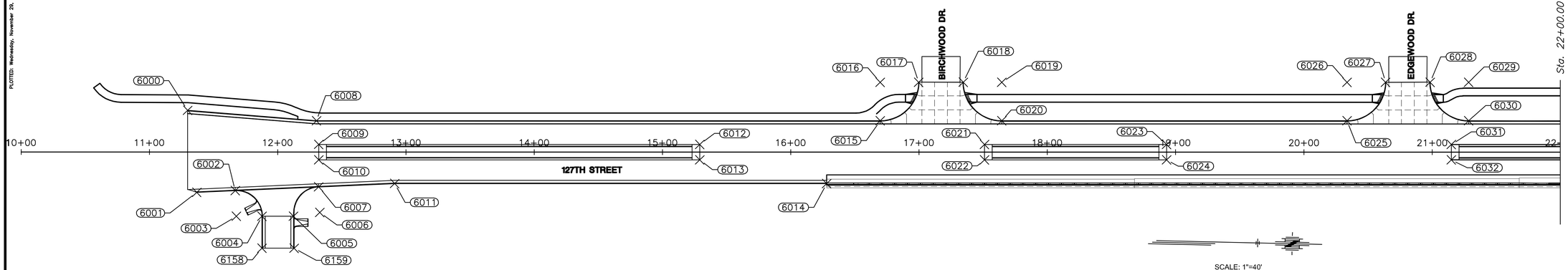

SCALE: 1"=40'
0 20 40 80

127TH STREET

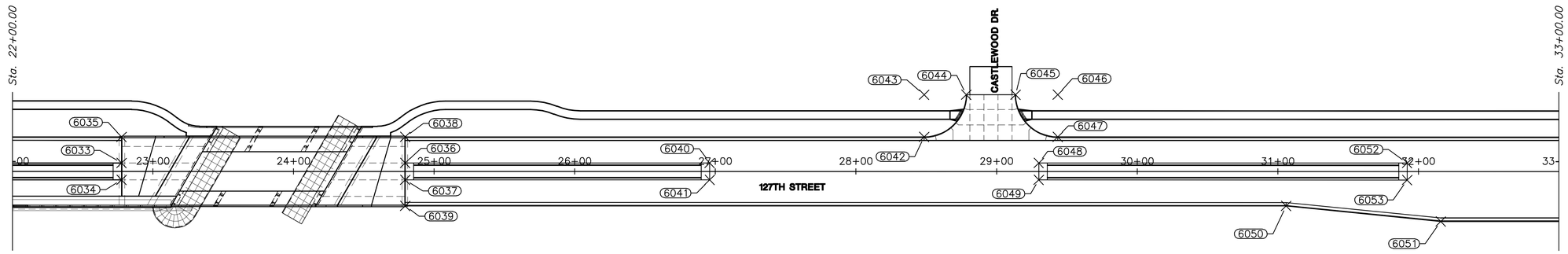

127TH STREET

SCALE: 1"=40'
0 20 40 80

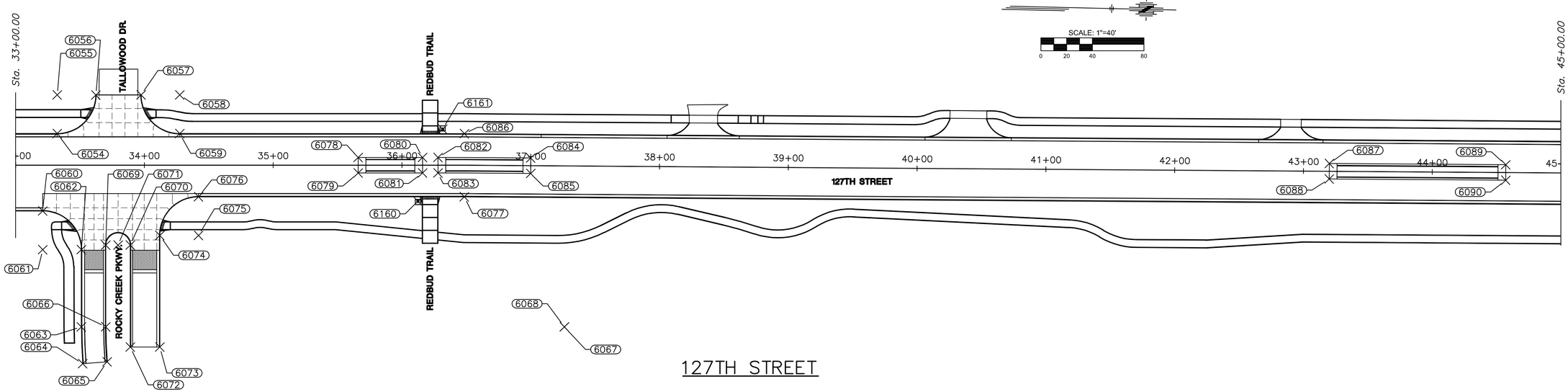

127TH STREET

J:\PROJECTS\2014\140104\0299 - COW_127TH E 13TH TO 21ST\06-CIVIL\CAD\BUBBLE\14299_BUBBLE MAP_PAV.DWG

MKEC
Wichita, KS • 316-684-9600

STREET IMPROVEMENTS FOR

127TH STREET EAST

FROM 13TH STREET NORTH TO 21ST STREET NORTH

©2017
MKEC Engineering
All Rights Reserved
www.mkec.com
These drawings and their contents, including, but not limited to, all concepts, designs, & ideas are the exclusive property of MKEC Engineering (MKEC), and may not be used or reproduced in any way without the express consent of MKEC.

PAVING BUBBLE MAP

PROJECT NO.	472-85158
DATE	11/29/17
SCALE	1"=40'

DESIGNED	DRAWN	CHECKED
JRA	RAM	JRA

NO.	REVISION	DATE

SHEET NO.

17 OF 183

Sh. No. 17

PLOTTED: Wednesday, November 29, 2017 @ 02:23PM

STATE	PROJECT NO.	YEAR	SHEET NO.	TOTAL SHEETS
KANSAS	87 N-0615-01	2017	18	183

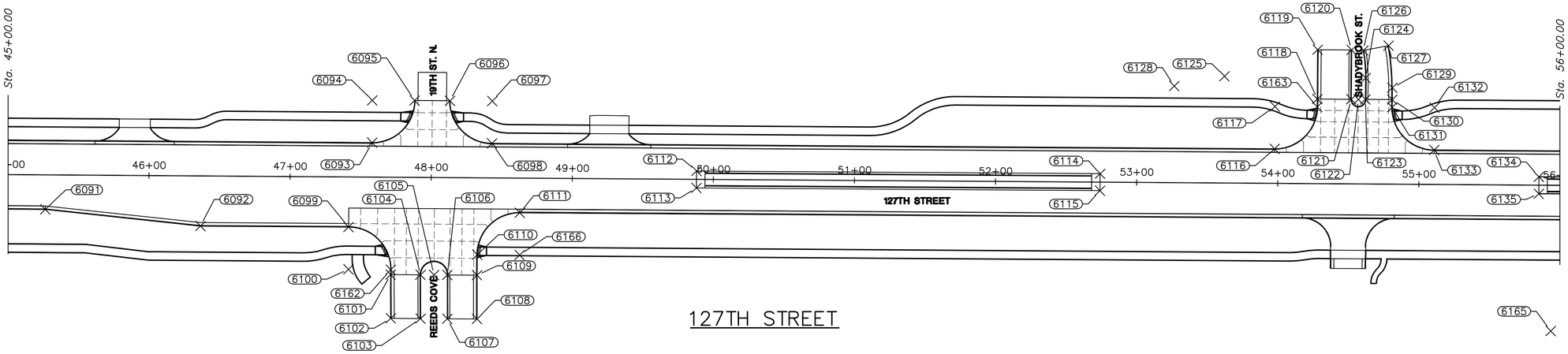

127TH STREET

SCALE: 1"=40'

0 20 40 80

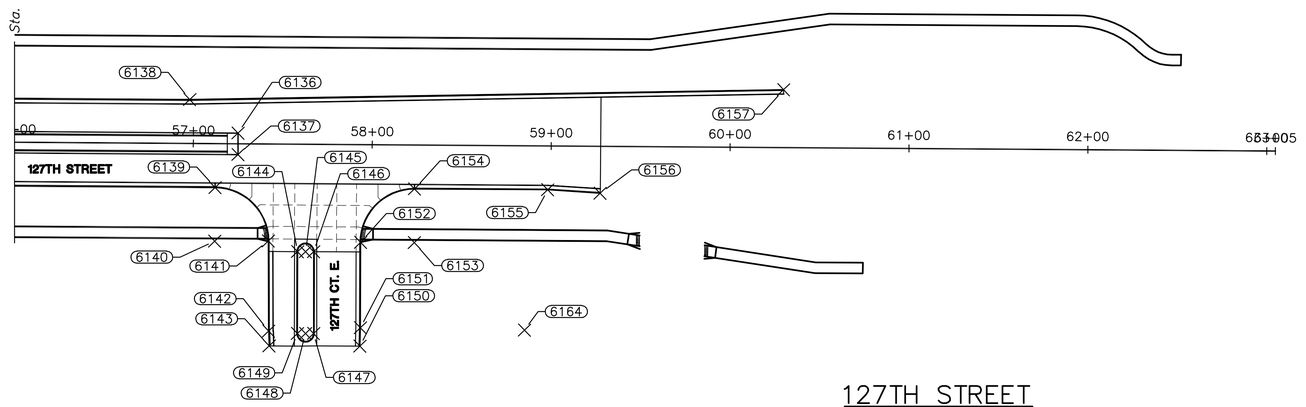

127TH STREET

J:\PROJECTS\2013\140104029\ - CIVIL_127TH E 13TH TO 21ST\05-CIVIL\CAD\BUBBLE\14290_BUBBLE MAP_PAV.DWG

MKEC
Wichita, KS • 316-684-9600

STREET IMPROVEMENTS FOR

127TH STREET EAST

FROM 13TH STREET NORTH TO 21ST STREET NORTH

©2017
MKEC Engineering
All Rights Reserved
www.mkec.com
These drawings and their contents, including, but not limited to, all concepts, designs, & ideas are the exclusive property of MKEC Engineering (MKEC) and may not be used or reproduced in any way without the express consent of MKEC.

PAVING BUBBLE MAP

PROJECT NO.	472-85158
DATE	11/29/17
SCALE	1"=40'

DESIGNED	DRAWN	CHECKED
JRA	RAM	JRA

NO.	REVISION	DATE

SHEET NO.

18 OF 183

Sh. No. 18

PLOTTED: Wednesday, November 29, 2017 @ 02:23PM

STATE	PROJECT NO.	YEAR	SHEET NO.	TOTAL SHEETS
KANSAS	87 N-0615-01	2017	19	183

PAVING POINTS

Point #	Station	Offset	Northing	Easting	Desc.
6000	11+29.75	32.52' LT.	1694691.0980	1691574.3390	BC PI
6001	11+36.84	31.41' RT.	1694699.5865	1691638.1064	BC PI
6002	11+66.85	30.07' RT.	1694729.5524	1691636.1069	BC RET
6003	11+67.74	50.05' RT.	1694730.8839	1691656.0626	RP
6004	11+87.74	50.05' RT.	1694750.8791	1691655.6261	BC RET
6005	12+12.24	50.05' RT.	1694775.3733	1691655.0915	BC RET
6006	12+32.74	47.14' RT.	1694795.8048	1691651.7308	RP
6007	12+31.85	27.16' RT.	1694794.4733	1691631.7752	BC RET
6008	12+30.16	24.50' LT.	1694791.6582	1691580.1649	BC PI
6009	12+32.00	6.00' LT.	1694793.9077	1691598.6202	HE MEDIAN
6010	12+32.00	6.00' RT.	1694794.1696	1691610.6173	HE MEDIAN
6011	12+91.17	24.50' RT.	1694853.7216	1691627.8219	BC PI
6012	15+29.00	6.00' LT.	1695090.8332	1691592.1394	HE MEDIAN
6013	15+29.00	6.00' RT.	1695091.0951	1691604.1365	HE MEDIAN
6014	16+27.98	24.50' RT.	1695190.4559	1691620.4723	PI RET WALL
6015	16+69.69	24.50' LT.	1695231.0855	1691570.5738	BC RET
6016	16+69.69	54.50' LT.	1695230.4309	1691540.5809	RP
6017	16+99.69	54.44' LT.	1695260.4251	1691539.9904	BC RET
6018	17+34.49	54.56' LT.	1695295.2124	1691539.1079	BC RET
6019	17+64.49	54.50' LT.	1695325.2065	1691538.5123	RP
6020	17+64.49	24.50' LT.	1695325.8611	1691568.5052	BC RET

PAVING POINTS

Point #	Station	Offset	Northing	Easting	Desc.
6021	17+51.00	6.00' LT.	1695312.7814	1691587.2951	HE MEDIAN
6022	17+51.00	6.00' RT.	1695313.0433	1691599.2922	HE MEDIAN
6023	18+93.00	6.00' LT.	1695454.7476	1691584.1965	HE MEDIAN
6024	18+93.00	6.00' RT.	1695455.0095	1691596.1936	HE MEDIAN
6025	20+33.69	24.50' LT.	1695595.0000	1691562.6309	BC RET
6026	20+33.69	54.50' LT.	1695594.3453	1691532.6380	RP
6027	20+63.69	54.58' LT.	1695624.3364	1691531.9036	BC RET
6028	20+98.45	54.59' LT.	1695659.0914	1691531.1343	BC RET
6029	21+28.45	54.50' LT.	1695689.0860	1691530.5702	RP
6030	21+28.45	24.50' LT.	1695689.7407	1691560.5630	BC RET
6031	21+15.00	6.00' LT.	1695676.6956	1691579.3522	HE MEDIAN
6032	21+15.00	6.00' RT.	1695676.9574	1691591.3493	HE MEDIAN
6033	22+77.68	6.00' LT.	1695839.3358	1691575.8023	HE MEDIAN
6034	22+77.68	6.00' RT.	1695839.5977	1691587.7995	HE MEDIAN
6035	22+77.68	24.50' LT.	1695838.9321	1691557.3067	PI APPR SLAB
6036	24+79.43	6.00' LT.	1696041.0402	1691571.3998	HE MEDIAN
6037	24+79.43	6.00' RT.	1696041.3020	1691583.3970	HE MEDIAN
6038	24+79.43	24.50' LT.	1696040.6365	1691552.9042	PI APPR SLAB
6039	24+79.43	24.50' RT.	1696041.7057	1691601.8926	PI APPR SLAB
6040	26+96.00	6.00' LT.	1696257.5553	1691566.6741	HE MEDIAN
6041	26+96.00	6.00' RT.	1696257.8172	1691578.6712	HE MEDIAN

PAVING POINTS

Point #	Station	Offset	Northing	Easting	Desc.
6042	28+48.47	24.50' LT.	1696409.5848	1691544.8514	BC RET
6043	28+48.47	54.50' LT.	1696408.9301	1691514.8586	RP
6044	28+78.47	54.49' LT.	1696438.9231	1691514.2094	BC RET
6045	29+13.48	54.46' LT.	1696473.9304	1691513.4797	BC RET
6046	29+43.48	54.50' LT.	1696503.9223	1691512.7853	RP
6047	29+43.48	24.50' LT.	1696504.5770	1691542.7781	BC RET
6048	29+30.00	6.00' LT.	1696491.4996	1691561.5679	HE MEDIAN
6049	29+30.00	6.00' RT.	1696491.7614	1691573.5651	HE MEDIAN
6050	31+05.91	24.50' RT.	1696668.0295	1691588.2222	BC PI
6051	32+15.91	35.50' RT.	1696778.2434	1691596.8193	BC PI
6052	31+92.00	6.00' LT.	1696753.4373	1691555.8508	HE MEDIAN
6053	31+92.00	6.00' RT.	1696753.6991	1691567.8479	HE MEDIAN
6054	33+32.38	24.50' LT.	1696893.3841	1691534.2919	BC RET
6055	33+32.38	54.50' LT.	1696892.7295	1691504.2990	RP
6056	33+62.38	54.44' LT.	1696922.7235	1691503.7018	BC RET
6057	33+97.48	54.55' LT.	1696957.8063	1691502.8311	BC RET
6058	34+27.48	54.50' LT.	1696987.8002	1691502.2240	RP
6059	34+27.48	24.50' LT.	1696988.4548	1691532.2168	BC RET
6060	33+21.11	35.50' RT.	1696883.4218	1691594.5236	BC RET
6061	33+21.11	65.50' RT.	1696884.0765	1691624.5165	RP
6062	33+51.11	65.50' RT.	1696914.0693	1691623.8609	BC RET

PAVING POINTS

Point #	Station	Offset	Northing	Easting	Desc.
6063	33+51.11	125.41' RT.	1696915.3784	1691683.7570	BC RET
6064	33+52.20	153.97' RT.	1696917.0917	1691712.2892	BC RET
6065	33+71.14	152.42' RT.	1696935.9954	1691710.3236	BC RET
6066	33+70.11	125.34' RT.	1696934.3724	1691683.2720	BC RET
6067	37+26.97	124.79' RT.	1697290.2874	1691675.4929	RP
6068	37+26.97	124.86' RT.	1697290.2889	1691675.5626	RP
6069	33+70.11	62.00' RT.	1696932.9883	1691619.9483	BC RET
6070	33+89.11	62.00' RT.	1696951.9838	1691619.5332	BC RET
6071	33+79.61	62.00' RT	1696942.4861	1691619.7408	RP
6072	33+89.11	141.00' RT.	1696953.7101	1691698.5146	BC PI
6073	34+12.11	141.00' RT.	1696976.7046	1691698.0120	BC PI
6074	34+12.11	54.50' RT.	1696974.8145	1691611.5343	BC RET
6075	34+42.11	54.50' RT.	1697004.8073	1691610.8787	RP
6076	34+42.11	24.50' RT.	1697004.1527	1691580.8859	BC RET
6077	36+48.42	24.50' RT.	1697210.4109	1691576.3840	BC PI
6078	35+66.00	6.00' LT.	1697127.3482	1691547.6897	HE MEDIAN
6079	35+66.00	6.00' RT.	1697127.6101	1691559.6868	HE MEDIAN
6080	36+16.00	6.00' LT.	1697177.3363	1691546.5986	HE MEDIAN
6081	36+16.00	6.00' RT.	1697177.5981	1691558.5958	HE MEDIAN
6082	36+28.00	6.00' LT.	1697189.3334	1691546.3368	HE MEDIAN
6083	36+28.00	6.00' RT.	1697189.5952	1691558.3339	HE MEDIAN

PAVING POINTS

Point #	Station	Offset	Northing	Easting	Desc.
6084	37+00.00	6.00' LT.	1697261.3638	1691545.1168	HE MEDIAN
6085	37+00.00	6.00' RT.	1697261.5436	1691557.1154	HE MEDIAN
6086	36+48.50	24.50' LT.	1697209.4254	1691527.3938	BC PI
6087	43+20.00	6.00' LT.	1697881.2941	1691535.8237	HE MEDIAN
6088	43+20.00	6.00' RT.	1697881.4740	1691547.8223	HE MEDIAN
6089	44+57.00	6.00' LT.	1698018.2787	1691533.7702	HE MEDIAN
6090	44+57.00	6.00' RT.	1698018.4586	1691545.7688	HE MEDIAN
6091	45+26.70	24.50' RT.	1698088.4243	1691563.2221	BC PI
6092	46+36.70	35.50' RT.	1698198.5768	1691572.5721	BC PI
6093	47+57.87	24.50' LT.	1698318.8362	1691510.7626	BC RET
6094	47+57.87	54.50' LT.	1698318.3866	1691480.7659	RP
6095	47+87.87	54.54' LT.	1698348.3825	1691480.2720	BC RET
6096	48+12.87	54.46' LT.	1698373.3812	1691479.9858	BC RET
6097	48+42.87	54.50' LT.	1698403.3771	1691479.4919	RP
6098	48+42.87	24.50' LT.	1698403.8268	1691509.4885	BC RET
6099	47+41.70	35.50' RT.	1698303.5651	1691570.9982	BC RET
6100	47+41.70	65.50' RT.	1698304.0147	1691600.9949	RP
6101	47+71.70	69.00' RT.	1698334.0638	1691604.0448	BC PI
6102	47+72.02	100.00' RT.	1698334.8536	1691635.0348	BC PI
6103	47+93.11	100.00' RT.	1698355.9395	1691634.7195	BC PI
6104	47+92.89	69.00' RT.	1698355.2583	1691603.7271	BC RET

PAVING POINTS

Point #	Station	Offset	Northing	Easting	Desc.
6105	48+02.39	69.00' RT.	1698364.7573	1691603.5847	RP
6106	48+11.89	69.00' RT.	1698374.2562	1691603.4423	BC RET
6107	48+12.10	100.00' RT.	1698374.9258	1691634.4358	BC PI
6108	48+33.19	100.00' RT.	1698396.0106	1691634.1197	BC PI
6109	48+32.96	69.00' RT.	1698395.3173	1691603.1266	BC PI
6110	48+32.96	54.50' RT.	1698395.1000	1691588.6282	BC RET
6111	48+62.96	24.50' RT.	1698424.6469	1691558.1819	BC RET
6112	49+88.00	6.00' LT.	1698549.2191	1691525.8110	HE MEDIAN
6113	49+88.00	6.00' RT.	1698549.3989	1691537.8097	HE MEDIAN
6114	52+74.00	6.00' LT.	1698835.1869	1691521.5242	HE MEDIAN
6115	52+74.00	6.00' RT.	1698835.3668	1691533.5229	HE MEDIAN
6116	53+97.57	24.50' LT.	1698958.4626	1691501.1742	BC RET
6117	53+97.57	54.50' LT.	1698958.0129	1691471.1776	RP
6118	54+27.57	60.00' LT.	1698987.9350	1691465.2284	BC PI
6119	54+27.62	95.00' LT.	1698987.4544	1691430.2317	BC PI
6120	54+51.63	95.00' LT.	1699011.4645	1691429.8718	BC PI
6121	54+51.68	60.00' LT.	1699012.0353	1691464.8672	BC RET
6122	54+56.68	60.00' LT.	1699017.0347	1691464.7922	RP
6123	54+61.68	59.98' LT.	1699022.0344	1691464.7411	BC RET
6124	54+61.75	75.23' LT.	1699021.8784	1691449.4836	BC RET
6125	53+61.75	75.71' LT.	1698921.8837	1691450.5060	RP

PAVING POINTS

Point #	Station	Offset	Northing	Easting	Desc.
6126	54+59.93	94.73' LT.	1699019.7618	1691430.0154	BC RET
6127	54+77.79	98.23' LT.	1699037.5681	1691426.2519	BC RET
6128	53+26.16	68.55' LT.	1698886.4076	1691458.2012	RP
6129	54+80.66	68.40' LT.	1699040.8924	1691456.0300	BC RET
6130	54+80.67	60.00' LT.	1699041.0217	1691464.4326	BC PI
6131	54+80.67	54.51' LT.	1699041.1022	1691469.9221	BC RET
6132	55+10.67	54.50' LT.	1699071.0990	1691469.4824	RP
6133	55+10.67	24.50' LT.	1699071.5486	1691499.4790	BC RET
6134	55+85.00	6.00' LT.	1699146.1520	1691516.8627	HE MEDIAN
6135	55+85.00	6.00' RT.	1699146.3318	1691528.8613	HE MEDIAN
6136	57+25.00	6.00' LT.	1699286.1362	1691514.7643	HE MEDIAN
6137	57+25.00	6.00' RT.	1699286.3161	1691526.7629	HE MEDIAN
6138	56+97.83	24.50' LT.	1699258.6877	1691496.6737	BC PI
6139	57+12.33	24.50' RT.	1699273.9271	1691545.4507	BC RET
6140	57+12.33	54.50' RT.	1699274.3767	1691575.4474	RP
6141	57+42.33	54.19' RT.	1699304.3672	1691574.6890	BC RET
6142	57+42.85	104.53' RT.	1699305.6397	1691625.0094	BC RET
6143	57+43.18	112.86' RT.	1699306.0939	1691633.3416	BC RET
6144	57+58.69	60.01' RT.	1699320.8078	1691580.2613	BC RET
6145	57+63.19	59.99' RT.	1699325.3068	1691580.1698	RP
6146	57+67.69	59.96' RT.	1699329.8059	1691580.0783	BC RET

PAVING POINTS

Point #	Station	Offset	Northing	Easting	Desc.
6147	57+67.93	105.71' RT.	1699330.7364	1691625.8188	BC RET
6148	57+63.43	105.73' RT.	1699326.2373	1691625.9103	RP
6149	57+58.93	105.76' RT.	1699321.7382	1691626.0018	BC RET
6150	57+93.87	112.56' RT.	1699356.7762	1691632.2829	BC RET
6151	57+94.08	102.38' RT.	1699356.8380	1691622.0995	BC RET
6152	57+93.87	54.63' RT.	1699355.9119	1691574.3573	BC RET
6153	58+23.87	54.50' RT.	1699385.9063	1691573.7755	RP
6154	58+23.87	24.50' RT.	1699385.4566	1691543.7789	BC RET
6155	58+98.26	24.50' RT.	1699459.8374	1691542.6638	BC PI
6156	59+27.51	26.21' RT.	1699489.1110	1691543.9380	BC PI
6157	60+29.75	32.37' LT.	1699590.4580	1691483.8340	BC PI
6158	11+87.73	75.00' RT.	1694751.4168	1691680.5669	BC PI
6159	12+12.75	75.00' RT.	1694776.4241	1691680.0211	BC PI
6160	36+12.46	28.00' RT.	1697174.5372	1691580.6678	STL TRAF SIG POLE
6161	36+31.56	28.00' LT.	1697192.4143	1691524.2643	STL TRAF SIG POLE
6162	47+71.70	65.50' RT.	1698334.0113	1691600.5452	BC RET
6163	54+27.57	54.46' LT.	1698988.0101	1691470.7710	BC RET
6164	58+85.84	103.05' RT.	1699448.5940	1691621.3944	RP
6165	55+94.09	103.26' RT.	1699156.8756	1691625.9781	RP
6166	48+62.96	54.50' RT.	1698425.0966	1691588.1786	RP

LEGEND

PC-Point of Curve
PCC-Point on Compound Curve
RP-Radius Curve
BC-Back of Curb
EP-Edge of Pavement
PT-Point on Tangent

MKEC
Wichita, KS • 316-684-9600

STREET IMPROVEMENTS FOR

127TH STREET EAST

FROM 13TH STREET NORTH TO 21ST STREET NORTH

©2017
MKEC Engineering
All Rights Reserved
www.mkec.com
These drawings and their contents, including, but not limited to, all concepts, designs, & ideas are the exclusive property of MKEC Engineering (MKEC), and may not be used or reproduced in any way without the express consent of MKEC.

PAVING BUBBLE MAP

PROJECT NO.	472-85158
DATE	11/29/17
SCALE	NONE

DESIGNED	DRAWN	CHECKED
JRA	RAM	JRA

NO.	REVISION	DATE

SHEET NO.

19 OF 183

J:\PROJECTS\2014\140104\0290 - COW_127TH E 13TH TO 21ST\105-CIVIL\CAD\BUBBLE\14290_BUBBLE MAP_PAV.DWG

PLOTTED: Wednesday, November 29, 2017 @ 02:24PM

STATE	PROJECT NO.	YEAR	SHEET NO.	TOTAL SHEETS
KANSAS	87 N-0615-01	2017	20	183

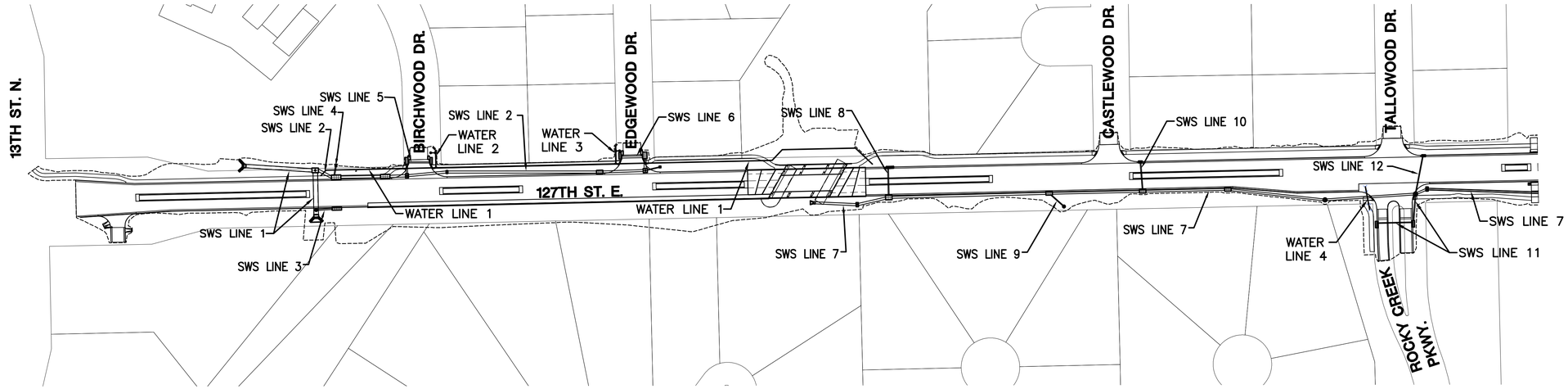

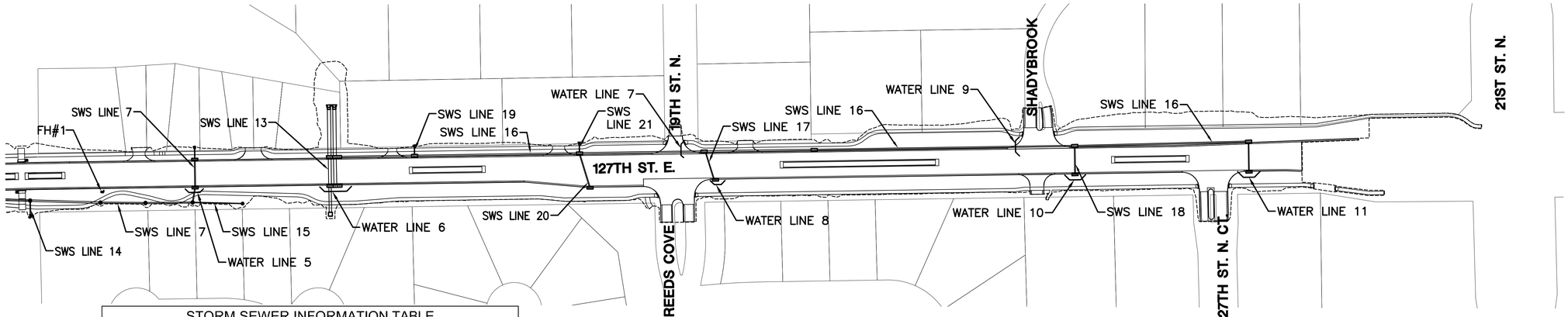

STORM SEWER INFORMATION TABLE

SWS LINE NO.	SHEET NO.	SHEET DESCRIPTION
SWS LINE 1	22	SWS PLAN AND PROFILE
SWS LINE 2	23, 24	SWS PLAN AND PROFILE
SWS LINE 3	22	SWS PLAN AND PROFILE
SWS LINE 4	24	SWS PLAN AND PROFILE
SWS LINE 5	24	SWS PLAN AND PROFILE
SWS LINE 6	24	SWS PLAN AND PROFILE
SWS LINE 7	25, 26, 27	SWS PLAN AND PROFILE
SWS LINE 8	28	SWS PLAN AND PROFILE
SWS LINE 9	28	SWS PLAN AND PROFILE
SWS LINE 10	28	SWS PLAN AND PROFILE
SWS LINE 11	29	SWS PLAN AND PROFILE
SWS LINE 12	29	SWS PLAN AND PROFILE
SWS LINE 13	30	SWS PLAN AND PROFILE
SWS LINE 14	30	SWS PLAN AND PROFILE
SWS LINE 15	31	SWS PLAN AND PROFILE
SWS LINE 16	32, 33, 34, 35	SWS PLAN AND PROFILE
SWS LINE 17	35	SWS PLAN AND PROFILE
SWS LINE 18	35	SWS PLAN AND PROFILE
SWS LINE 19	29	SWS PLAN AND PROFILE
SWS LINE 20	31	SWS PLAN AND PROFILE
SWS LINE 21	31	SWS PLAN AND PROFILE

WATER LINE INFORMATION TABLE

WATER LINE NO.	SHEET NO.	SHEET DESCRIPTION
WATER LINE 1	105, 106	WATER PLAN AND PROFILE
WATER LINE 2	105	WATER & FH PLAN AND PROFILE
WATER LINE 3	106	WATER & FH PLAN AND PROFILE
WATER LINE 4	107	WATER PLAN AND PROFILE
WATER LINE 5	107	WATER PLAN AND PROFILE
WATER LINE 6	107	WATER PLAN AND PROFILE
WATER LINE 7	108	WATER PLAN AND PROFILE
WATER LINE 8	108	WATER PLAN AND PROFILE
WATER LINE 9	109	WATER PLAN AND PROFILE
WATER LINE 10	109	WATER PLAN AND PROFILE
WATER LINE 11	109	WATER PLAN AND PROFILE
FH#1	108	FH PLAN AND PROFILE

UTILITY KEY MAP

SCALE: 1" = 100'

100 0 100 200

MKEC
Wichita, KS • 316-684-9600

STREET IMPROVEMENTS FOR

127TH STREET EAST

FROM 13TH STREET NORTH TO 21ST STREET NORTH

©2017
MKEC Engineering
All Rights Reserved
www.mkec.com
These drawings and their contents, including, but not limited to, all concepts, designs, & ideas are the exclusive property of MKEC Engineering (MKEC), and may not be used or reproduced in any way without the express consent of MKEC.

UTILITY KEY MAP

PROJECT NO.	472-85158
DATE	11/29/17
SCALE	1"=100'

DESIGNED	DRAWN	CHECKED
JRA	LES	JRA

NO.	REVISION	DATE

SHEET NO.

20 OF 183

Sh. No. 20

J:\PROJECTS\2014\140194090 - COW_127TH E 13TH TO 21ST\05-CIVIL\CAD\SWS\14290_UB01.DWG

PLOTTED: Wednesday, December 06, 2017 @ 01:40PM

STATE	PROJECT NO.	YEAR	SHEET NO.	TOTAL SHEETS
KANSAS	87 N–0615–01	2017	21	183

SUMMARY OF QUANTITIES - STORM SEWER PIPE AND STRUCTURES*

LINE NO.	PIPE													INLETS												MANHOLES								MISCELLANEOUS	
	Pipe, SWS 15" RCP (lf)	Pipe, SWS 18" RCP (lf)	Pipe, SWS 24" RCP (lf)	Pipe, SWS 30" RCP (lf)	Pipe, SWS 36" RCP (lf)	Pipe, SWS 42" RCP (lf)	Pipe, SWS 48" RCP (lf)	Pipe, SWS, HERCP (34"X53") (42) (lf)	Pipe, SWS, HERCP (38"X60") (48) (lf)	Pipe, SWS, HERCP (43"X68") (54) (lf)	Pipe, SWS, RCBC (5'x4') (lf)	Pipe, SWS, RCBC (7'x4') (lf)	Fill, Sand (Flushed & Vibrated) (lf)	Inlet, Curb (Type 1) (L=10', W=3') (ea)	Inlet, Curb (Type 1) (L=10', W=4') (ea)	Inlet, Curb (Type 1) (L=10', W=5') (ea)	Inlet, Curb (Type 1) (L=10', W=7') (ea)	Inlet, Curb (Type 1) (L=15', W=4') (ea)	Inlet, Curb (Type 1) (L=15', W=6') (ea)	Inlet, Curb (Type 1) (L=15', W=7') (ea)	Inlet, Curb (Type 1A) (L=10', W=3') (ea)	Inlet, Curb (Type 1A) (L=10', W=4') (ea)	Inlet, Curb (Type 1A) (L=10', W=6') (ea)	Inlet, Curb (Type 2) (L=6'-4", W=3'-4") (ea)	Inlet, Drop (Single) (ea)	Inlet, Drop (Double) (ea)	MH, Std. SWS (5') (ea)	MH, Shallow SWS (4') (ea)	MH, Shallow SWS (6') (ea)	MH Stack (4') (ea)	MH, Reinf. Conc. (L=6', W=3') (ea)	MH, Reinf. Conc. (L=6', W=4') (ea)	MH, Reinf. Conc. (L=6', W=6') (ea)	MH, Reinf. Conc. (L=10', W=7') (ea)	Pipe, SWS, PVC 4", Perforated (lf)	Inlet Hookup (ea)
1											123.3	80.5	203.8																		1			1		
2	26.0					407.4	159.8						532.2			1			1	1					1						1			74	3
3			31.8										31.8					1																27	1
4		20.3											0.0												1										
5			41.7	23.1									64.8								1	1												44	2^
6					42.6	23.4							66.0								1		1											44	2^
7	21.1	78.1	165.8	325.7	646.8	409.7							951.8	2		3	1								1		4		2		2			132	6
8		51.2											51.2											2										10	2
9		33.0											0.0															1							
10		50.3											50.3											1										10	1
11		111.6											111.6	2																				44	2
12	66.4												66.4											1										10	1
13								51.0	104.0	188.2			54.0		2			2														1		54	3
14		27.8											0.0													1									
15	90.0												0.0															1							
16		54.7	782.4	863.5									1,699.3	1	6																			176	8
17		53.8											53.8	1																				22	1
18		51.5											51.5	1																				22	1
19	17.7												0.0												1										
20		65.3											65.3	1																				22	1
21	17.9												0.0												1										
TOTALS	239	604#	1022	1212	689	841	160	51	104	189	123	81	4,054	8	8	4	1	3	1	1	2	1	1	4	5	1	4	2	2	1	2	1	2	1	691	36+

* All pipe conduit is measured per linear feet and structures are measured per each.

\+ This total includes two additional hook-ups not associated with a specific stormwater sewer line. They are noted on sheets 45.

^ Hook-ups shall be modified as required to fit inlet and street pavement.

This total includes 6 additional feet of pipe for the pipe extension associated with the driveway at sta. 12+00.24.

End sections for storm sewer pipe and box culverts are subsidiary to the cost of the storm sewer pipe or box culverts.

Beehive frame and grate shall be EJIW Model 1205-02, Neenah Model R-2561 or Deeter Model 1967 or approved equal.

J:\PROJECTS\2014\1401040290 - COW_127TH E 13TH TO 21ST\05-CIVIL\CADS\WS\14290_D002.DWG

MKEC
Wichita, KS • 316-684-9600

STREET IMPROVEMENTS FOR

127TH STREET EAST

FROM 13TH STREET NORTH TO 21ST STREET NORTH

©2017
MKEC Engineering
All Rights Reserved
www.mkec.com
These drawings and their contents, including, but not limited to, all concepts, designs, & ideas are the exclusive property of MKEC Engineering (MKEC), and may not be used or reproduced in any way without the express consent of MKEC.

STORM SEWER SUMMARY

PROJECT NO.	472-85158
DATE	11/29/17
SCALE	NONE

DESIGNED	DRAWN	CHECKED
JRA	WNJ	JRA

NO.	REVISION	DATE

SHEET NO.

21 OF 183

PLOTTED: Wednesday, November 29, 2017 @ 02:28PM

STATE	PROJECT NO.	YEAR	SHEET NO.	TOTAL SHEETS
KANSAS	87 N–0615–01	2017	22	183

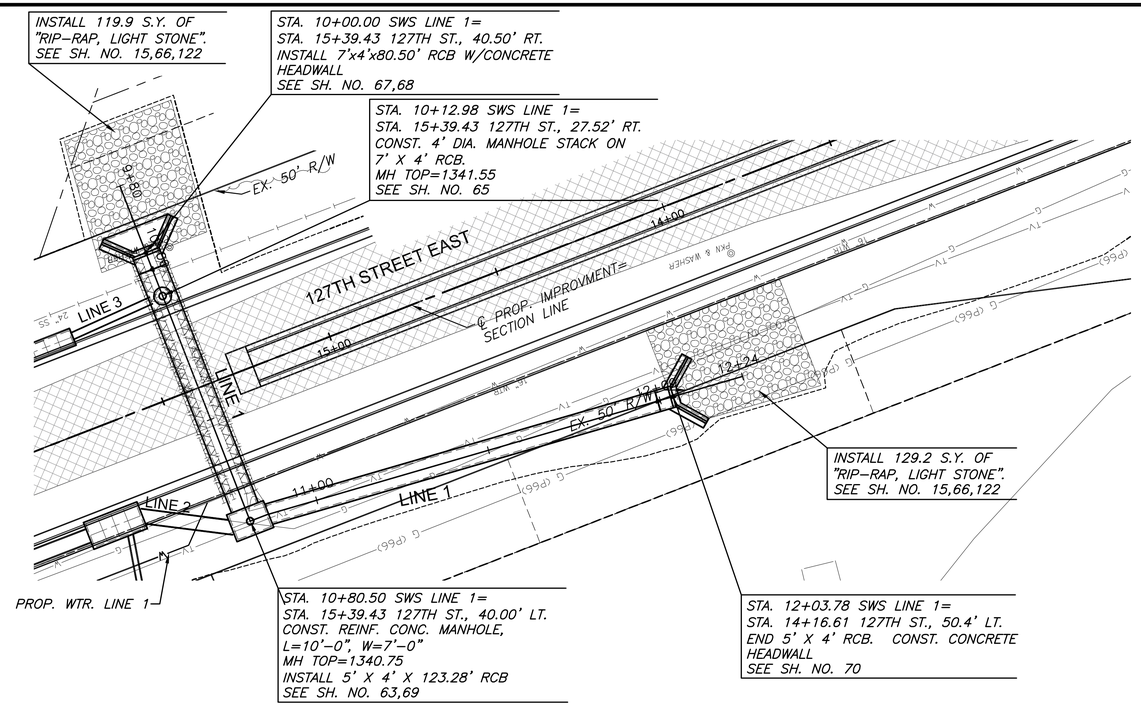

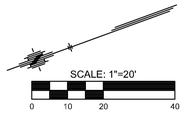

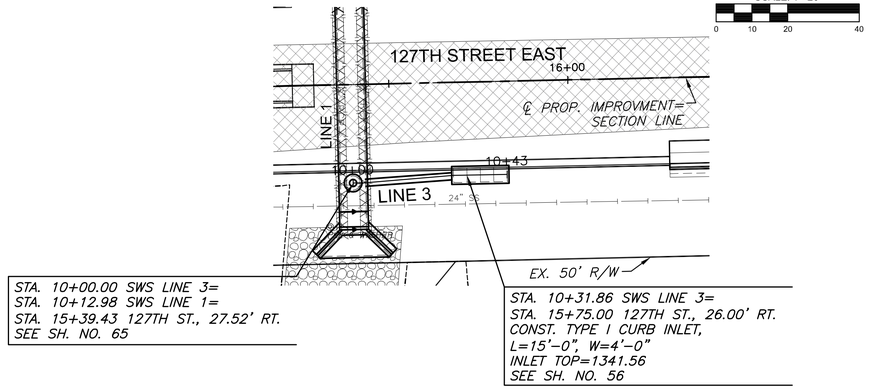

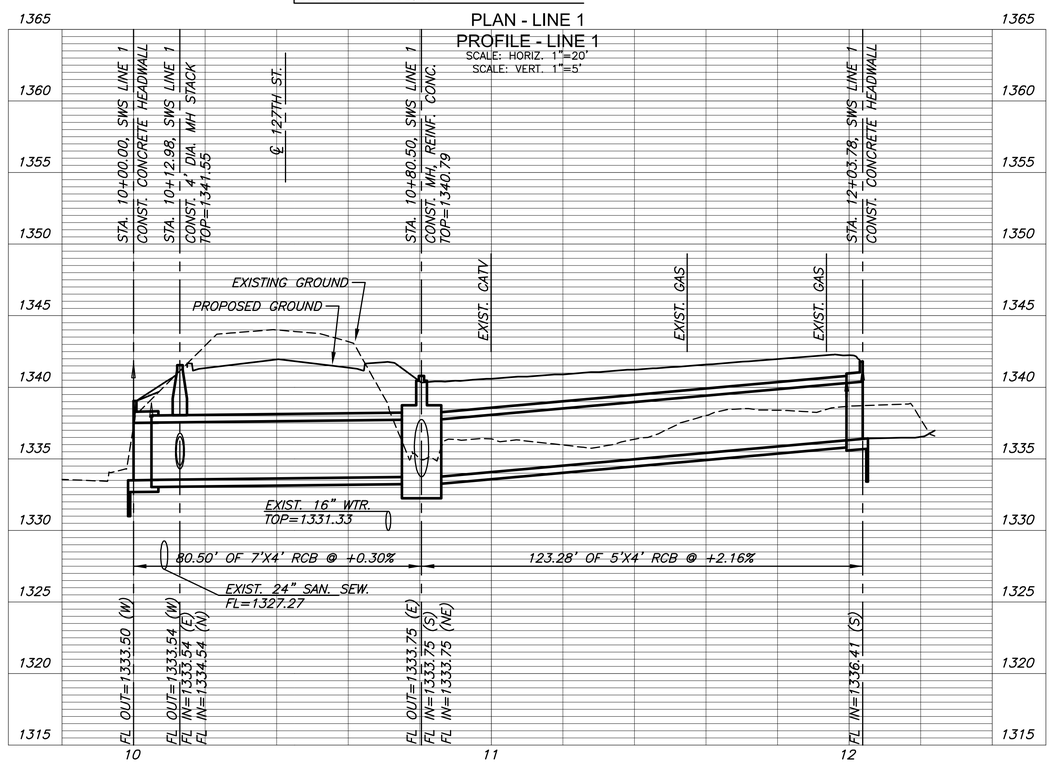

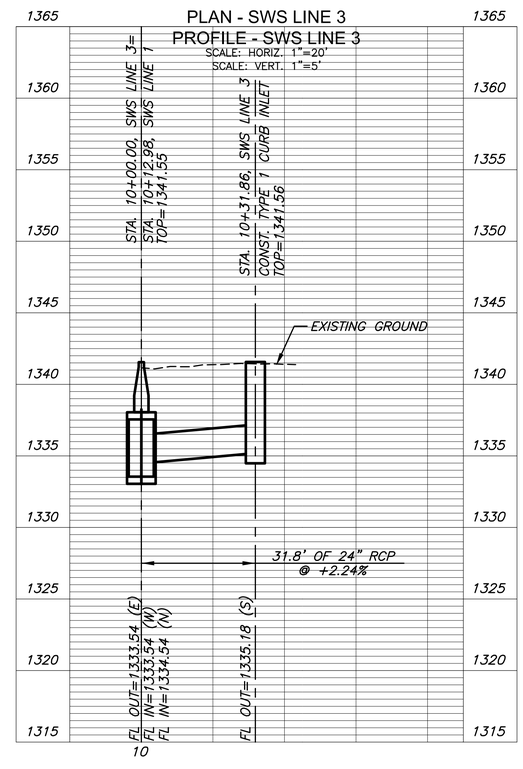

J:\PROJECTS\2014\1401940299 - COW_127TH E 13TH TO 21ST\05-CIVIL\CAD\SWS\14299DP01.DWG

MKEC
Wichita, KS • 316-684-9600

STREET IMPROVEMENTS FOR

127TH STREET EAST

FROM 13TH STREET NORTH TO 21ST STREET NORTH

©2017
MKEC Engineering
All Rights Reserved
www.mkec.com
These drawings and their contents, including, but not limited to, all concepts, designs, & ideas are the exclusive property of MKEC Engineering (MKEC) and may not be used or reproduced in any way without the express consent of MKEC.

"STORM SEWER PLAN & PROFILE LINES 1, & 3"

PROJECT NO.	472-85158
DATE	11/29/17
SCALE	1"=20'

DESIGNED	DRAWN	CHECKED
JRA	WNJ	JRA

NO.	REVISION	DATE

SHEET NO.

22 OF 183

Sh. No. 22

PLOTTED: Wednesday, November 29, 2017 @ 02:27PM

STATE	PROJECT NO.	YEAR	SHEET NO.	TOTAL SHEETS
KANSAS	87 N-0615-01	2017	23	183

STA. 10+00.00 SWS LINE 2=
STA. 10+80.50 SWS LINE 1=
STA. 15+39.43 127TH ST., 40.00' LT.
MH TOP=1340.75
SEE SH. NO. 22,63

STA. 10+34.98 SWS LINE 2=
STA. 15+75.00 127TH ST., 27.50' LT.
CONST. TYPE I CURB INLET,
L=15'-0", W=7'-0"
INLET TOP=1341.56
SEE SH. NO. 56

STA. 11+26.18 SWS LINE 2=
STA. 16+58.69 127TH ST., 27.00' LT.
CONST. TYPE I CURB INLET,
L=15'-0", W=6'-0"
INLET TOP=1341.79
SEE SH. NO. 56

STA. 12+28.41 SWS LINE 2=
STA. 17+64.49 127TH ST., 32.33' LT.
CONST. DOUBLE DROP INLET W/9" APRON
L=4'-0", W=2'-0"
INLET TOP=1340.80
SEE SH. NO. 60

STA. 14+89.18 SWS LINE 2=
STA. 20+25.19 127TH ST., 26.50 LT.
CONST. STD. TYPE I CURB INLET
L=10'-0", W=5'-0"
INLET TOP=1342.89
SEE SH. NO. 55

STA. 11+59.73 SWS LINE 2=
STA. 16+95.99 127TH ST., 27.37' LT.
CONST. MH, REINF. CONC.
L=6'-0", W=4'-0"
MH TOP=1341.42
SEE SH. NO. 63

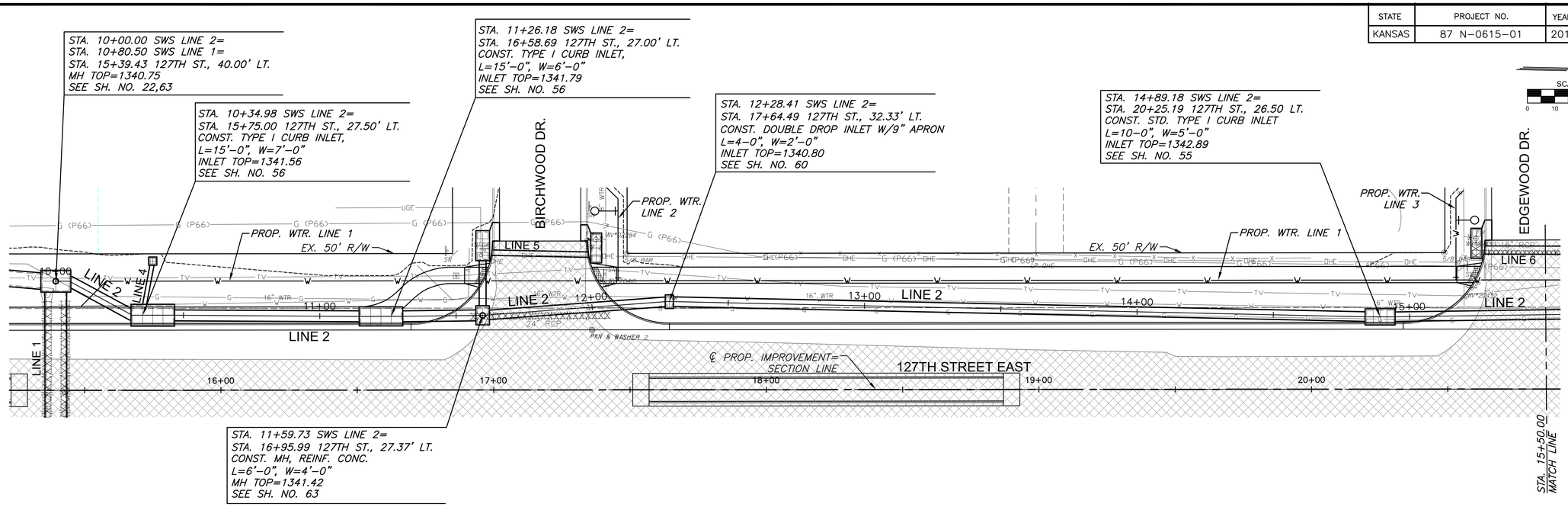

SCALE: 1"=20'
0 10 20 40

PLAN - LINE 2
PROFILE - LINE 2
SCALE: HORIZ. 1"=20'
SCALE: VERT. 1"=5'

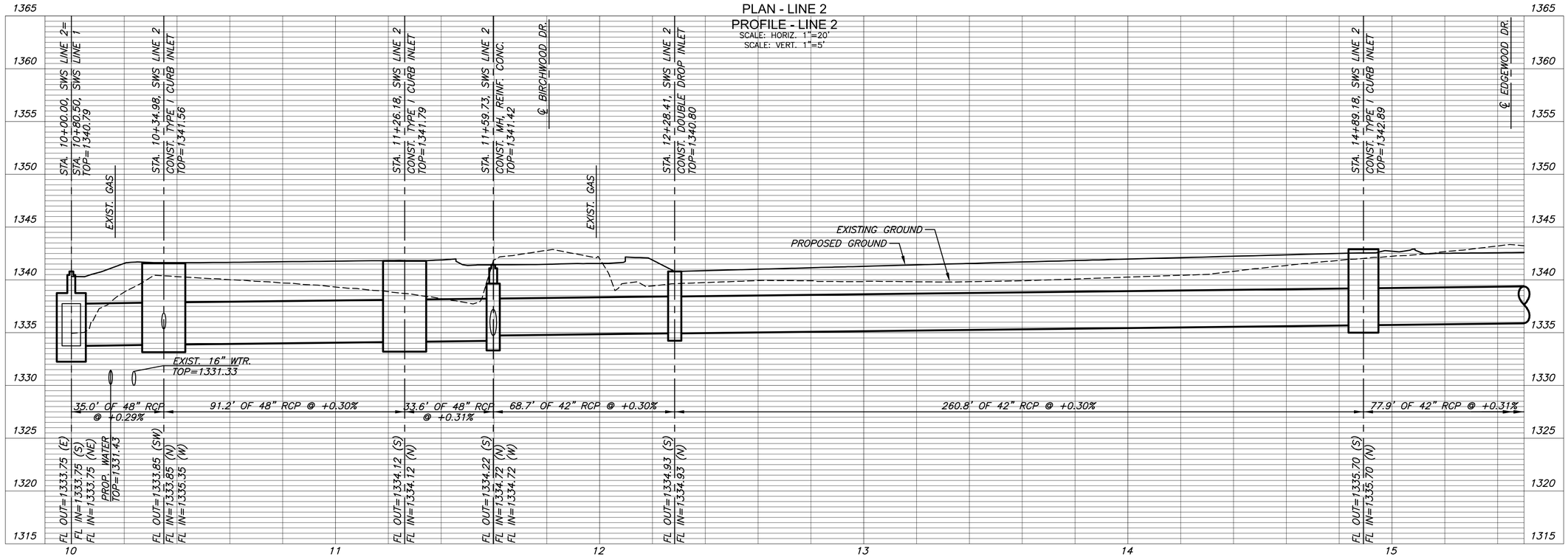

J:\PROJECTS\2014\1401040290 - COV_ 127TH E 13TH TO 21ST\05-CIVIL\CAD\SWS\14290DP02.DWG

MKEC
Wichita, KS • 316-684-9600

STREET IMPROVEMENTS FOR

127TH STREET EAST

FROM 13TH STREET NORTH TO 21ST STREET NORTH

©2017
MKEC Engineering
All Rights Reserved
www.mkec.com
These drawings and their contents, including, but not limited to, all concepts, designs, & ideas are the exclusive property of MKEC Engineering (MKEC), and may not be used or reproduced in any way without the express consent of MKEC.

STORM SEWER PLAN & PROFILE LINE 2

PROJECT NO.	472-85158
DATE	11/29/17
SCALE	1"=20'

DESIGNED	DRAWN	CHECKED
JRA	WNJ	JRA

NO.	REVISION	DATE

SHEET NO.
23 OF 183

Sh. No. 23

PLOTTED: Wednesday, November 29, 2017 @ 02:28PM

STATE	PROJECT NO.	YEAR	SHEET NO.	TOTAL SHEETS
KANSAS	87 N-0615-01	2017	24	183

STA. 15+93.05 SWS LINE 2=
STA. 21+28.46 127TH ST., 32.94' LT.
CONST. SINGLE DROP INLET W/9" APRON
L=2-0", W=2-0"
INLET TOP=1341.47
SEE SH. NO. 60

STA. 15+67.10 SWS LINE 2=
STA. 21+03.10 127TH ST., 27.50' LT.
CONST. MH, REINF. CONC.
L=6'-0", W=6'-0"
MH TOP=1342.64
SEE SH. NO. 63

15+50.00 MATCH LINE

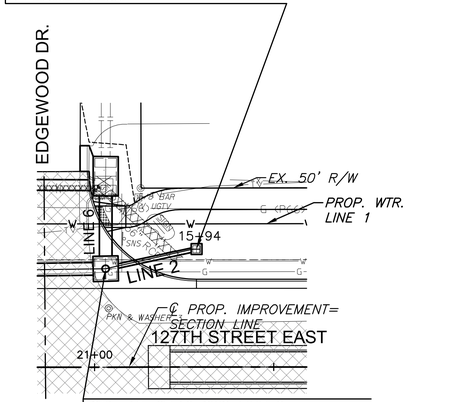

SCALE: 1"=20'
0 10 20 40

PLAN - SWS LINE 2

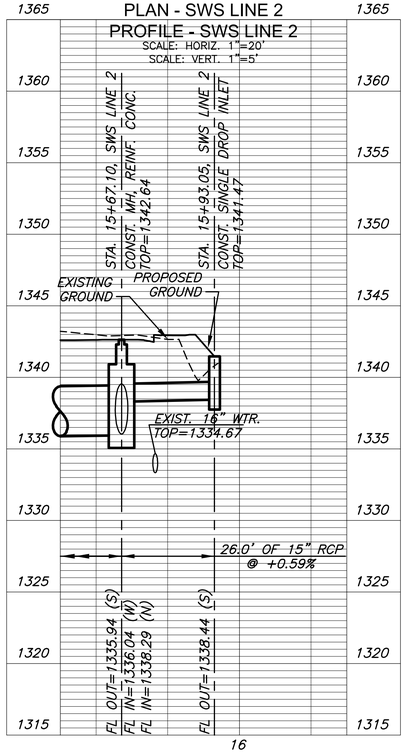

16

STA. 10+20.28 SWS LINE 2=
STA. 15+75.00 127TH ST., 47.33' LT.
CONST. SINGLE DROP INLET W/9" APRON
L=2-0", W=2-0"
INLET TOP=1337.90
SEE SH. NO. 60

STA. 10+00.00 SWS LINE 4=
STA. 10+34.98 SWS LINE 2=
STA. 15+75.00 127TH ST., 27.50 LT.
INLET TOP=1341.56
SEE SH. NO. 23,56

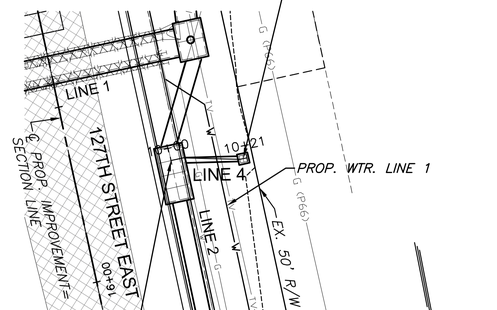

SCALE: 1"=20'
0 10 20 40

PLAN - SWS LINE 4

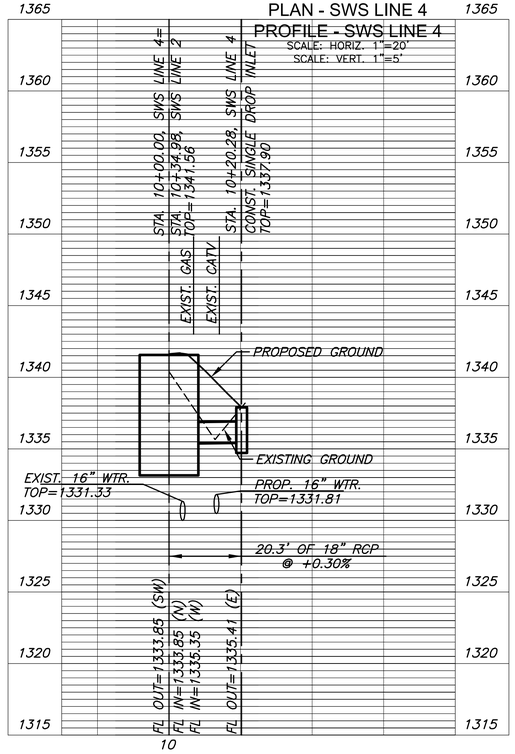

10

STA. 10+23.03 SWS LINE 5=
STA. 16+96.01 127TH ST., 50.39' LT.
CONST. STD. TYPE 1A CURB INLET
L=10-0", W=4'-0"
INLET TOP=1342.36
SEE SH. NO. 57

STA. 10+64.67 SWS LINE 5=
STA. 17+37.65 127TH ST., 49.52' LT.
CONST. STD. TYPE 1A CURB INLET
L=10'-0", W=3'-0"
INLET TOP=1342.22
SEE SH. NO. 57

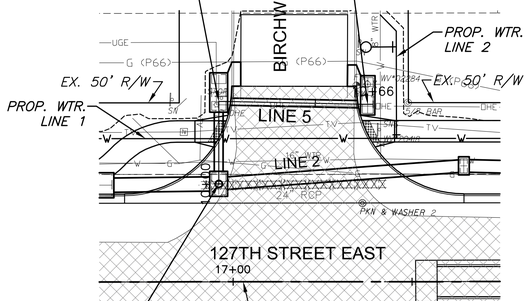

STA. 10+00.00 SWS LINE 5=
STA. 11+59.73 SWS LINE 2=
STA. 16+95.99 127TH ST., 27.37 LT.
MH TOP=1341.42
SEE SH. NO. 23,63

SCALE: 1"=20'
0 10 20 40

PLAN - SWS LINE 5

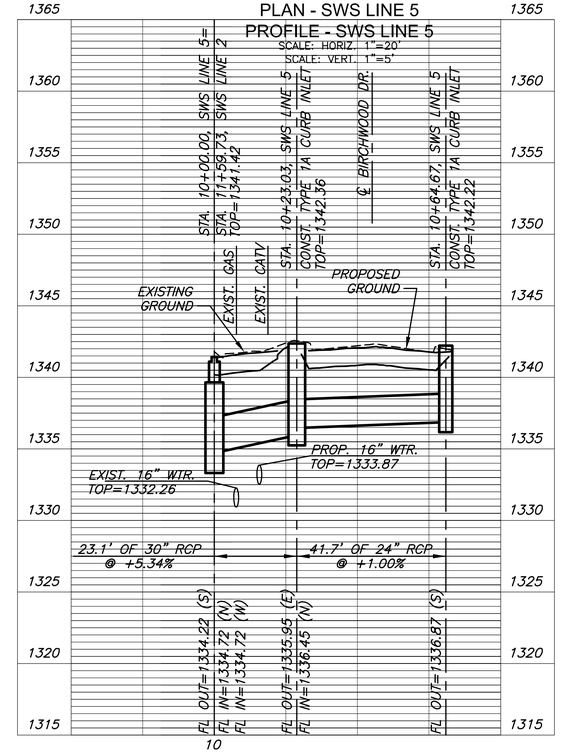

10

STA. 10+00.00 SWS LINE 6=
STA. 15+67.10 SWS LINE 2=
STA. 21+03.10 127TH ST., 27.50' LT.
MH TOP=1342.64
SEE SH. NO. 23,63

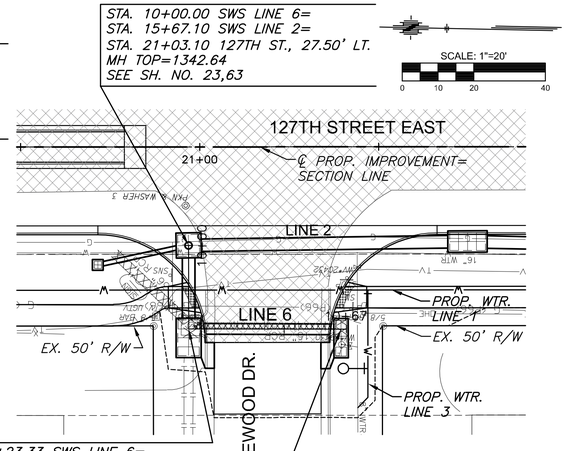

STA. 10+23.33 SWS LINE 6=
STA. 21+03.12 127TH ST., 53.33' LT.
CONST. STD. TYPE 1A CURB INLET
L=10-0", W=6'-0"
INLET TOP=1342.69
SEE SH. NO. 57

STA. 10+65.90 SWS LINE 6=
STA. 20+60.53 127TH ST., 53.46' LT.
CONST. STD. TYPE 1A CURB INLET
L=10'-0", W=3'-0"
INLET TOP=1342.97
SEE SH. NO. 57

PLAN - SWS LINE 6

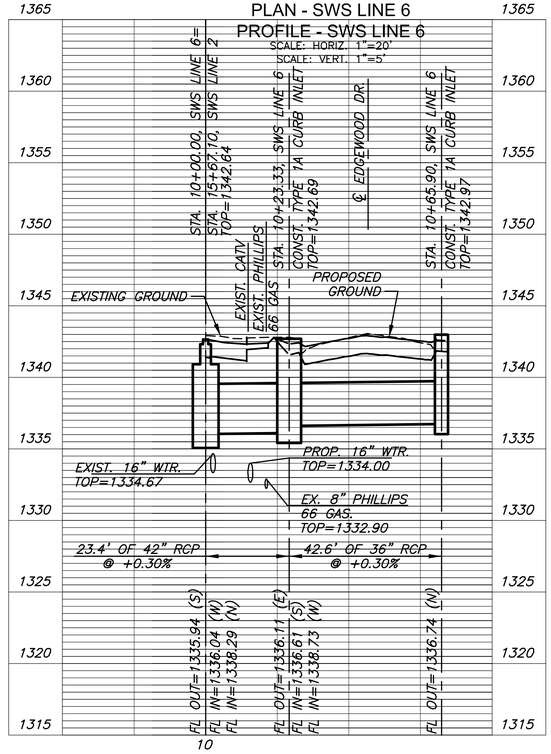

10

J:\PROJECTS\2014\1401940290 - COW_127TH E 13TH TO 21ST\06-CIVIL\CAD\SWS\142900P03.DWG

MKEC
Wichita, KS • 316-684-9600

127TH STREET EAST

STREET IMPROVEMENTS FOR
FROM 13TH STREET NORTH TO 21ST STREET NORTH

©2017
MKEC Engineering
All Rights Reserved
www.mkec.com
These drawings and their contents, including, but not limited to, all concepts, designs, & ideas are the exclusive property of MKEC Engineering (MKEC) and may not be used or reproduced in any way without the express consent of MKEC.

"STORM SEWER PLAN & PROFILE LINES 2, 4, 5, & 6"

PROJECT NO.	472-85158
DATE	11/29/17
SCALE	1"=20'

DESIGNED	DRAWN	CHECKED
JRA	WNJ	JRA

NO.	REVISION	DATE

SHEET NO.
24 OF 183

Sh. No. 24

PLOTTED: Wednesday, November 29, 2017 @ 02:29PM

STATE	PROJECT NO.	YEAR	SHEET NO.	TOTAL SHEETS
KANSAS	87 N-0615-01	2017	25	183

SCALE: 1"=20'
0 10 20 40

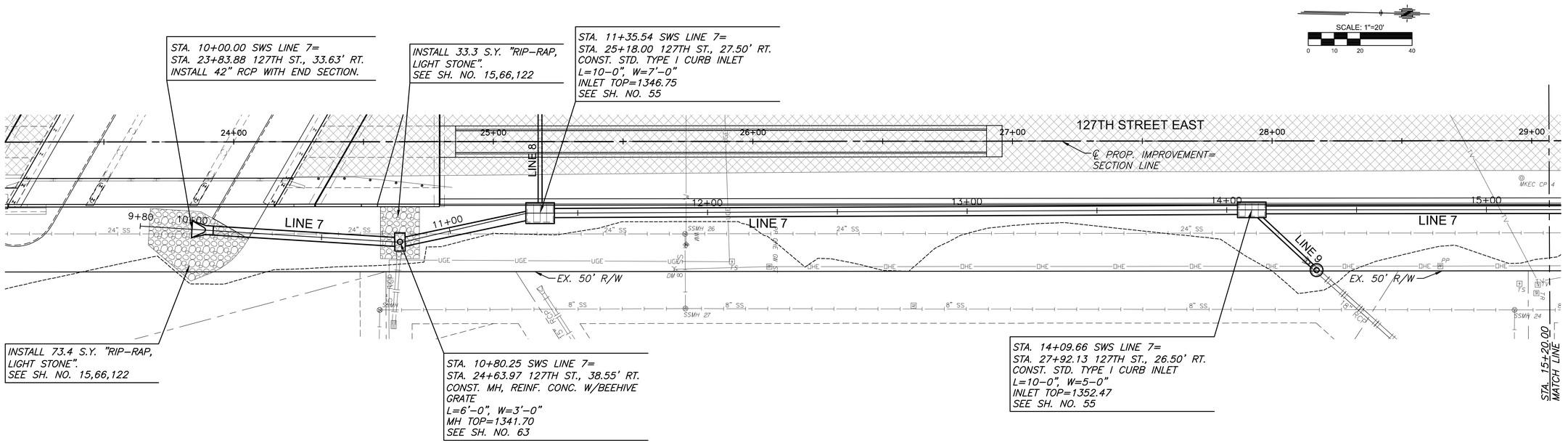

PLAN - SWS LINE 7
PROFILE - SWS LINE 7

SCALE: HORIZ. 1"=20'
SCALE: VERT. 1"=5'

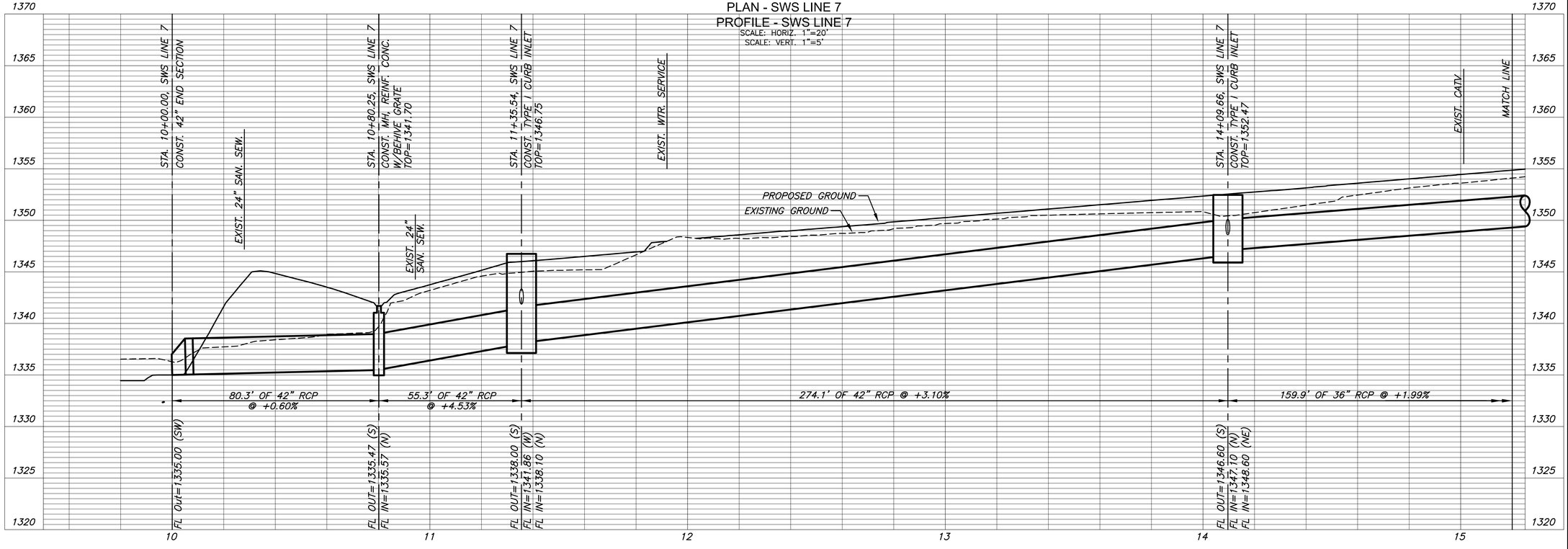

MKEC
Wichita, KS • 316-684-9600

STREET IMPROVEMENTS FOR

127TH STREET EAST

FROM 13TH STREET NORTH TO 21ST STREET NORTH

©2017
MKEC Engineering
All Rights Reserved
www.mkec.com
These drawings and their contents, including, but not limited to, all concepts, designs, & ideas are the exclusive property of MKEC Engineering (MKEC), and may not be used or reproduced in any way without the express consent of MKEC.

STORM SEWER PLAN & PROFILE LINE 7

PROJECT NO.	472-85158
DATE	11/29/17
SCALE	1"=20'

DESIGNED	DRAWN	CHECKED
JRA	WNJ	JRA

NO.	REVISION	DATE

SHEET NO.
25 OF 183

Sh. No. 25

J:\PROJECTS\2014\140194090 - COW_ 127TH E 13TH TO 21ST\05-CIVIL\CAD\SWS\142900P04.DWG

PLOTTED: Wednesday, November 29, 2017 @ 02:30PM

STATE	PROJECT NO.	YEAR	SHEET NO.	TOTAL SHEETS
KANSAS	87 N-0615-01	2017	26	183

SCALE: 1"=20'
0 10 20 40

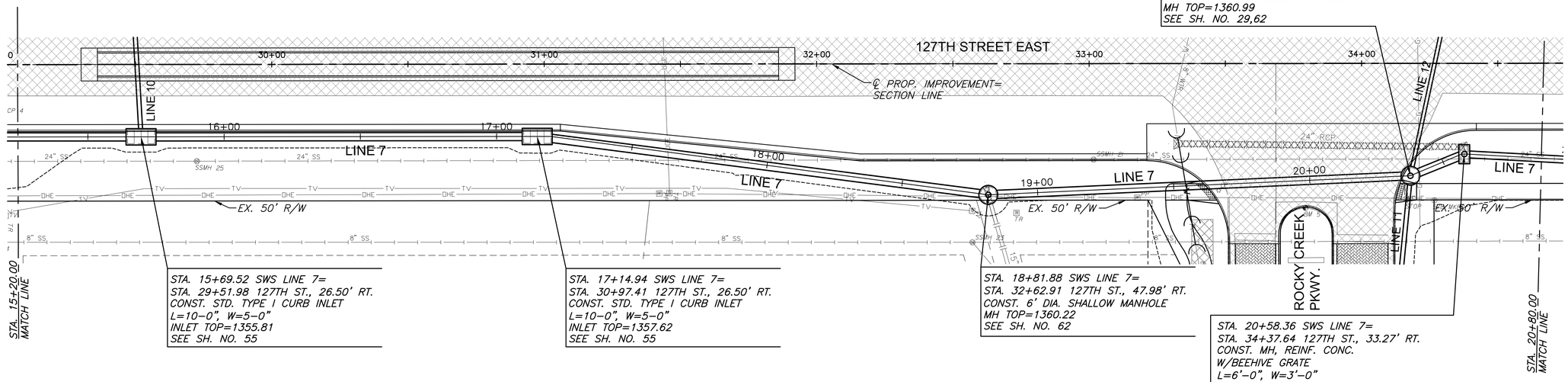

PLAN - SWS LINE 7 CONT. (1)
PROFILE - SWS LINE 7 CONT. (1)
SCALE: HORIZ. 1"=20'
SCALE: VERT. 1"=5'

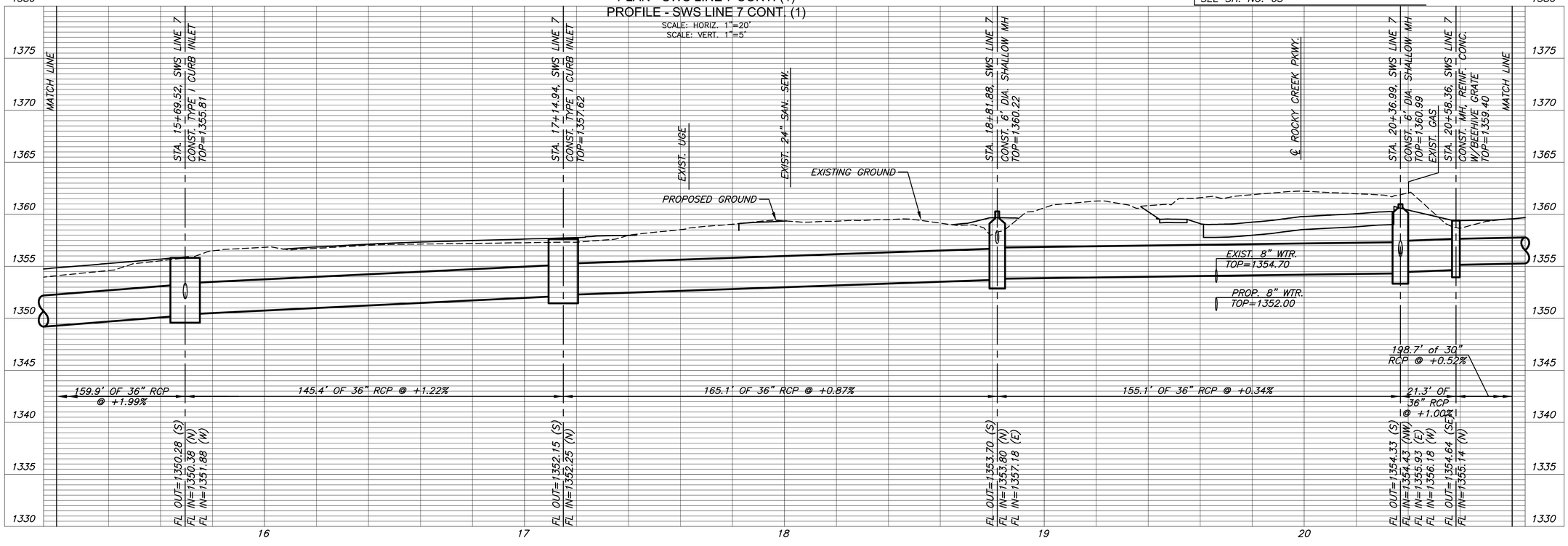

J:\PROJECTS\2014\140194090 - COW_ 127TH E 13TH TO 21ST\05-CIVIL\CAD\SWS\14290DP05.DWG

MKEC
Wichita, KS • 316-684-9600

STREET IMPROVEMENTS FOR

127TH STREET EAST

FROM 13TH STREET NORTH TO 21ST STREET NORTH

©2017
MKEC Engineering
All Rights Reserved
www.mkec.com
These drawings and their contents, including, but not limited to, all concepts, designs, & ideas are the exclusive property of MKEC Engineering (MKEC), and may not be used or reproduced in any way without the express consent of MKEC.

STORM SEWER PLAN & PROFILE LINE 7 CONT.

PROJECT NO.	472-85158
DATE	11/29/17
SCALE	1"=20'

DESIGNED	DRAWN	CHECKED
JRA	WNJ	JRA

NO.	REVISION	DATE

SHEET NO.
26 OF 183

Sh. No. 26

PLOTTED: Wednesday, November 29, 2017 @ 02:31PM

STATE	PROJECT NO.	YEAR	SHEET NO.	TOTAL SHEETS
KANSAS	87 N-0615-01	2017	27	183

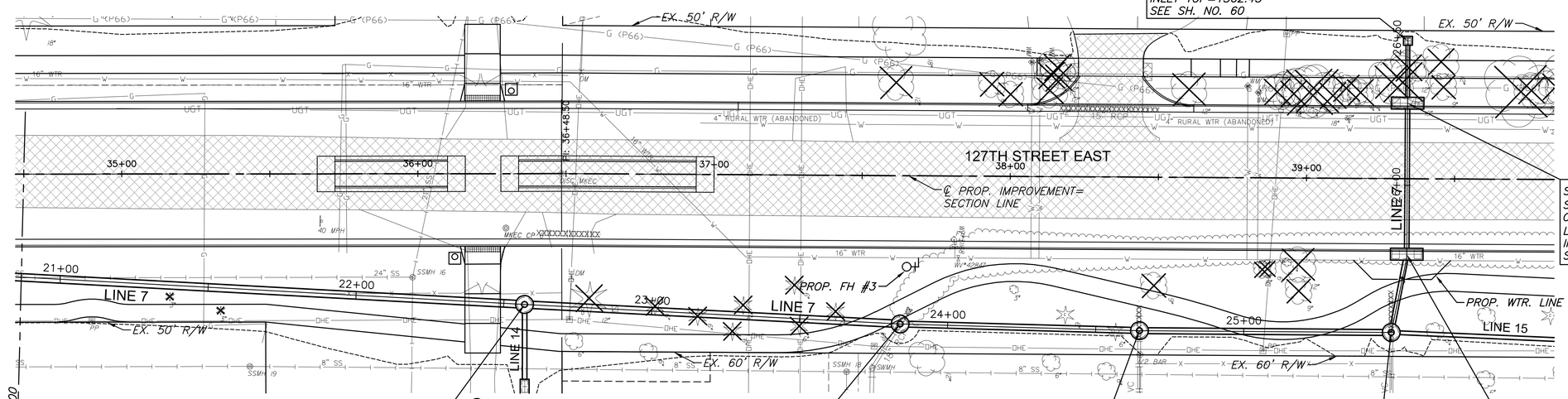

STA. 26+48.80 SWS LINE 7=
STA. 39+34.00 127TH ST., 46.54' LT.
CONST. SINGLE DROP INLET W/9" APRON
L=2-0", W=2-0"
INLET TOP=1362.43
SEE SH. NO. 60

SCALE: 1"=20'
0 10 20 40

STA. 26+27.76 SWS LINE 7=
STA. 39+34.00 127TH ST., 25.50' LT.
CONST. TYPE 1 CURB INLET
L=10'-0", W=3'-0"
INLET TOP=1363.57
SEE SH. NO. 55

STA. 22+57.02 SWS LINE 7=
STA. 36+36.00 127TH ST., 44.15' RT.
CONST. 5' DIA. STD. MANHOLE
MH TOP=1365.47
SEE SH. NO. 30,62

STA. 23+83.98 SWS LINE 7=
STA. 37+63.13 127TH ST., 50.06' RT.
CONST. 5' DIA. STD. MANHOLE
MH TOP=1365.37
REMOVE EXIST. END SECTION AND CONNECT TO EXIST. 15" RCP (SE) TO MH
SEE SH. NO. 62

STA. 24+64.81 SWS LINE 7=
STA. 38+43.94 127TH ST., 51.83' RT.
CONST. 5' DIA. STD. MANHOLE
MH TOP=1367.47
CONNECT EXIST. 12" PVC (E) TO MH
SEE SH. NO. 62

STA. 25+49.81 SWS LINE 7=
STA. 39+28.94 127TH ST., 51.94' RT.
CONST. 5' DIA. STD. MANHOLE
MH TOP=1366.85
CONNECT EXIST. 12" PVC (E) TO MH
SEE SH. NO. 62

STA. 25+76.76 SWS LINE 7=
STA. 39+34.00 127TH ST., 25.50 RT.
CONST. TYPE I CURB INLET
L=10'-0", W=3'-0"
INLET TOP=1363.57
SEE SH. NO. 55

PLAN - SWS LINE 7 (2)
PROFILE - SWS LINE 7 (2)

SCALE: HORIZ. 1"=20'
SCALE: VERT. 1"=5'

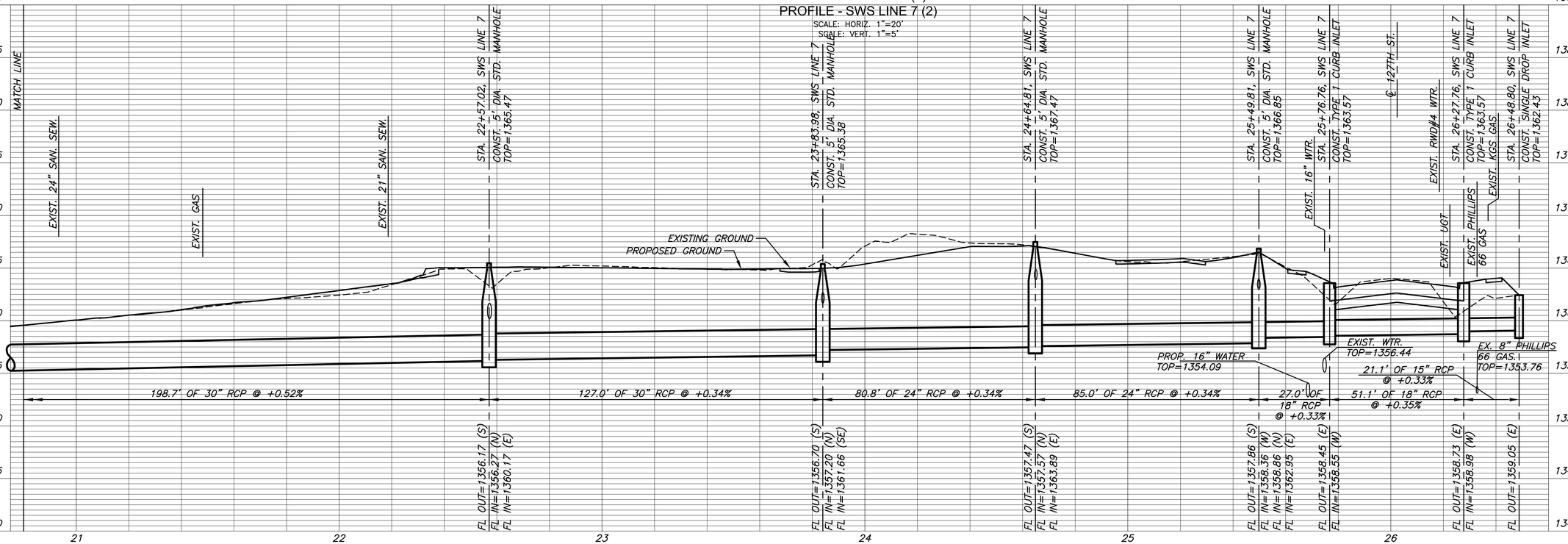

J:\PROJECTS\2014\140194\26\1 - COV_127TH E 13TH TO 21ST\05-CIVIL\CAD\SYST\42X60\PRS-1.DWG

MKEC
Wichita, KS • 316-684-9600

STREET IMPROVEMENTS FOR

127TH STREET EAST

FROM 13TH STREET NORTH TO 21ST STREET NORTH

©2017
MKEC Engineering
All Rights Reserved
www.mkec.com
These drawings and their contents, including, but not limited to, all concepts, designs, & ideas are the exclusive property of MKEC Engineering (MKEC), and may not be used or reproduced in any way without the express consent of MKEC.

STORM SEWER PLAN & PROFILE LINE 7 CONT.

PROJECT NO.	472-85158
DATE	11/29/17
SCALE	1"=20'

DESIGNED	DRAWN	CHECKED
JRA	WNJ	JRA

NO.	REVISION	DATE

SHEET NO.

27 OF 183

Sh. No. 27

PLOTTED: Wednesday, November 29, 2017 @ 02:32PM

STATE	PROJECT NO.	YEAR	SHEET NO.	TOTAL SHEETS
KANSAS	87 N-0615-01	2017	28	183

STA. 10+00.00 SWS LINE 8=
STA. 11+35.54 SWS LINE 7=
STA. 25+18.00 127TH ST., 27.50' RT.
INLET TOP=1346.75
SEE SH. NO. 25,55

STA. 10+51.17 SWS LINE 8=
STA. 25+18.00 127TH ST., 23.67' LT.
CONST. TYPE 2 CURB INLET (DOUBLE)
L=6'-4", W=3-4"
INLET TOP=1346.75
SEE SH. NO. 58

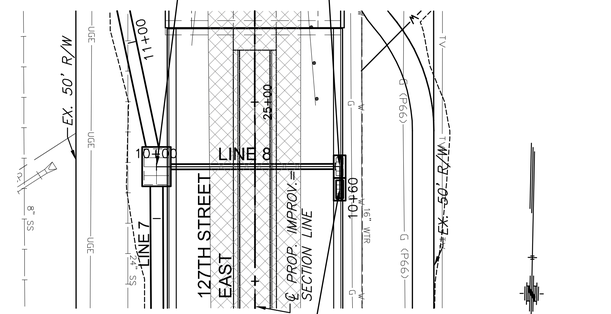

STA. 10+56.26 SWS LINE 8=
STA. 25+24.34 127TH ST., 23.67' LT.
CONST. TYPE 2 CURB INLET (DOUBLE)
L=6'-4", W=3-4"
INLET TOP=1346.87
SEE SH. NO. 58

STA. 10+32.98 SWS LINE 9=
STA. 28+17.04 127TH ST., 49.66' RT.
REMOVE EXISTING END SECTION AND
CONST. 4' DIA. SHALLOW MANHOLE
MH TOP=1333.95
CONNECT TO EXISTING 18" RCP
SEE SH. NO. 62

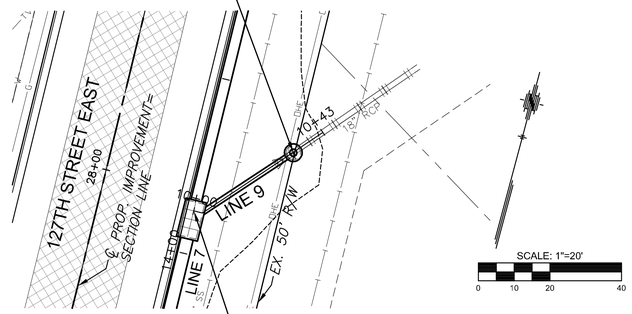

STA. 10+00.00 SWS LINE 9=
STA. 14+12.16 SWS LINE 7=
STA. 27+92.13 127TH ST., 26.50' RT.
INLET TOP=1352.47
SEE SH. NO. 25,55

STA. 10+00.00 SWS LINE 10=
STA. 15+69.52 SWS LINE 7=
STA. 29+51.98 127TH ST., 26.50' RT.
INLET TOP=1355.81
SEE SH. NO. 26,55

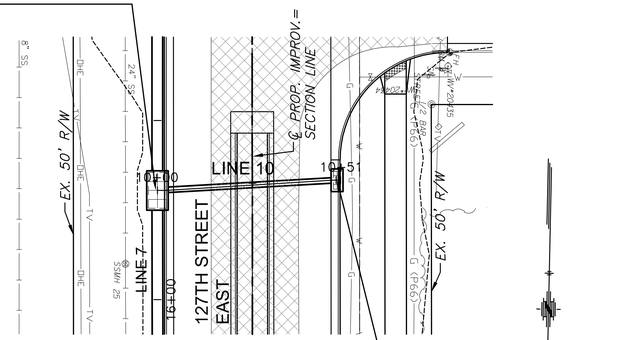

STA. 10+50.26 SWS LINE 10=
STA. 29+49.15 127TH ST., 23.67' LT.
CONST. TYPE 2 CURB INLET (DOUBLE)
L=6'-4", W=3-4"
INLET TOP=1355.75
SEE SH. NO. 58

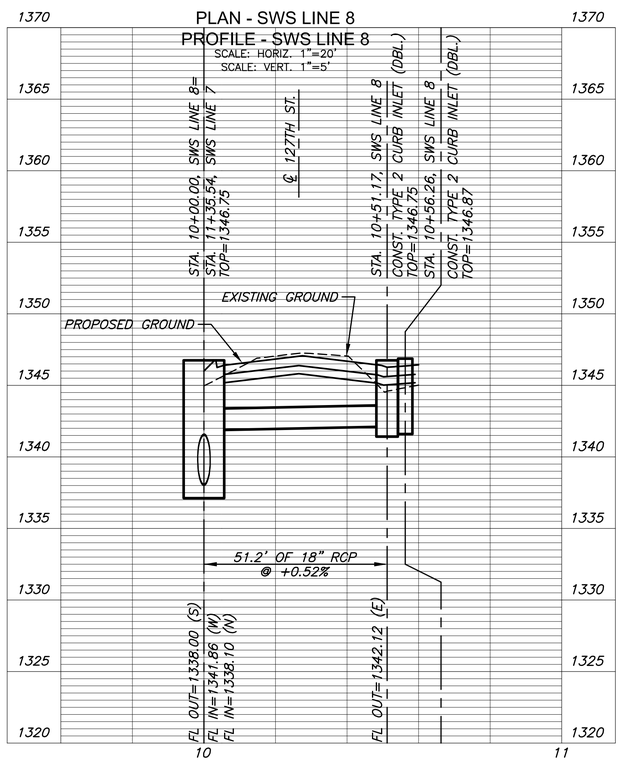

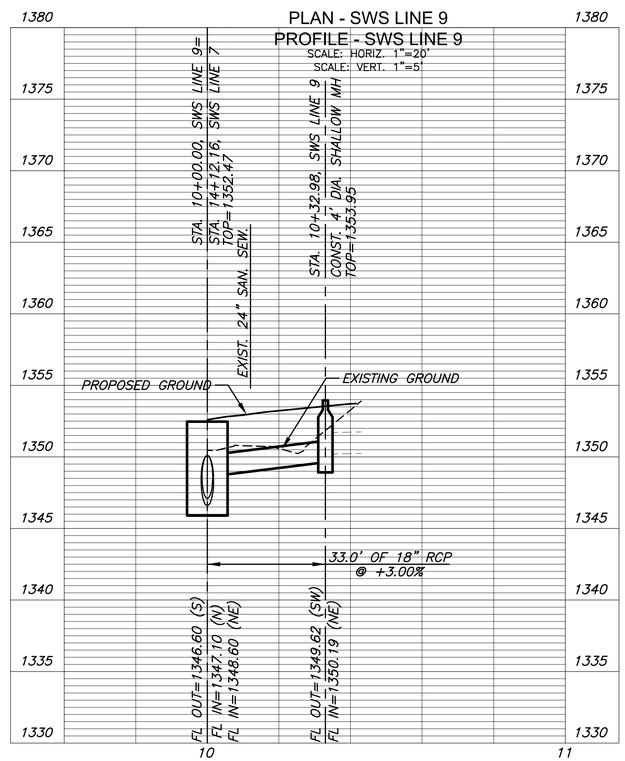

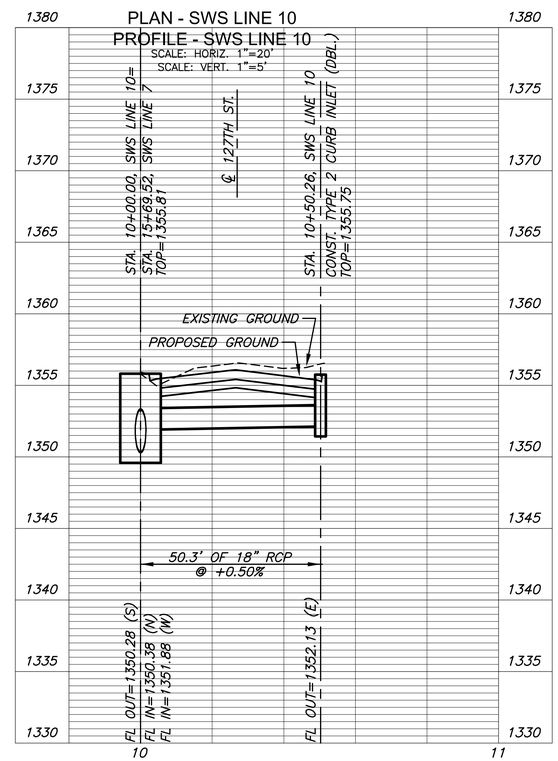

J:\PROJECTS\2014\140104290 - COV_ 127TH E 13TH TO 21ST\05-CIVIL\CAD\SWS\14290DP06.DWG

MKEC
Wichita, KS • 316-684-9600

STREET IMPROVEMENTS FOR

127TH STREET EAST

FROM 13TH STREET NORTH TO 21ST STREET NORTH

©2017
MKEC Engineering
All Rights Reserved
www.mkec.com
These drawings and their contents, including, but not limited to, all concepts, designs, & ideas are the exclusive property of MKEC Engineering (MKEC), and may not be used or reproduced in any way without the express consent of MKEC.

"STORM SEWER PLAN & PROFILE LINES 8, 9 & 10"

PROJECT NO.	472-85158
DATE	11/29/17
SCALE	1"=20'

DESIGNED	DRAWN	CHECKED
JRA	WNJ	JRA

NO.	REVISION	DATE

SHEET NO.

28 OF 183

Sh. No. 28

PLOTTED: Wednesday, November 29, 2017 @ 02:34PM

STATE	PROJECT NO.	YEAR	SHEET NO.	TOTAL SHEETS
KANSAS	87 N-0615-01	2017	29	183

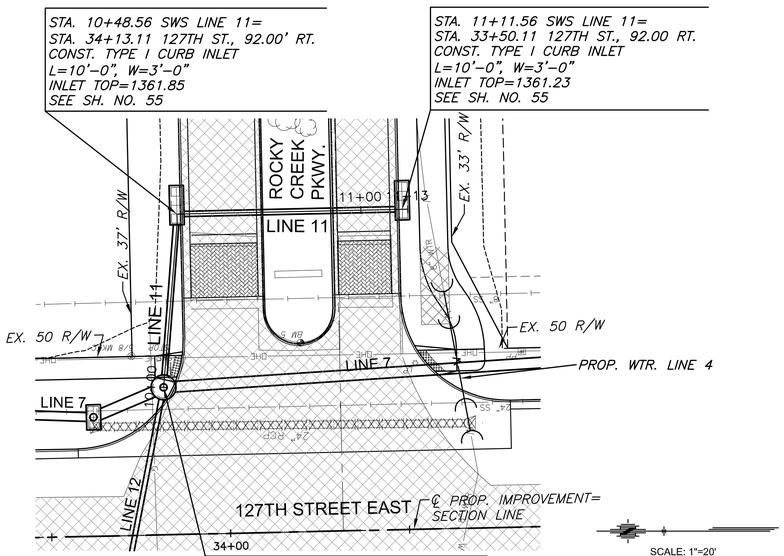

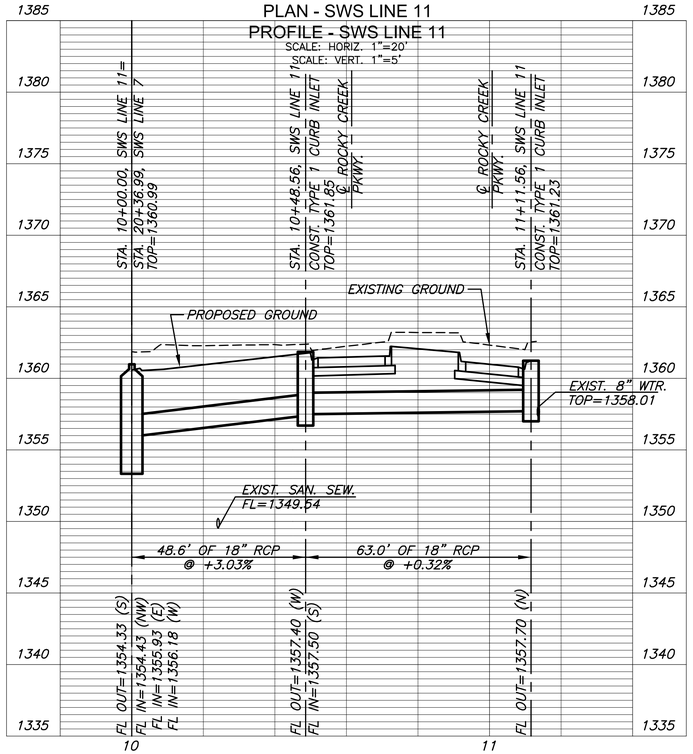

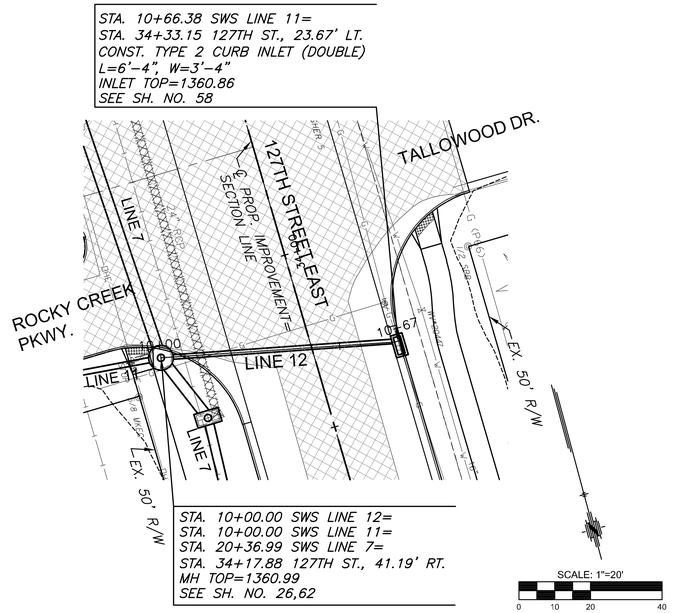

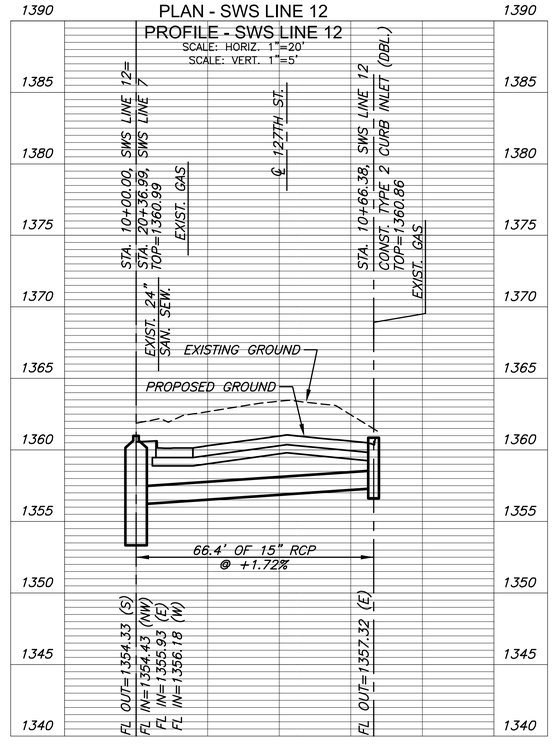

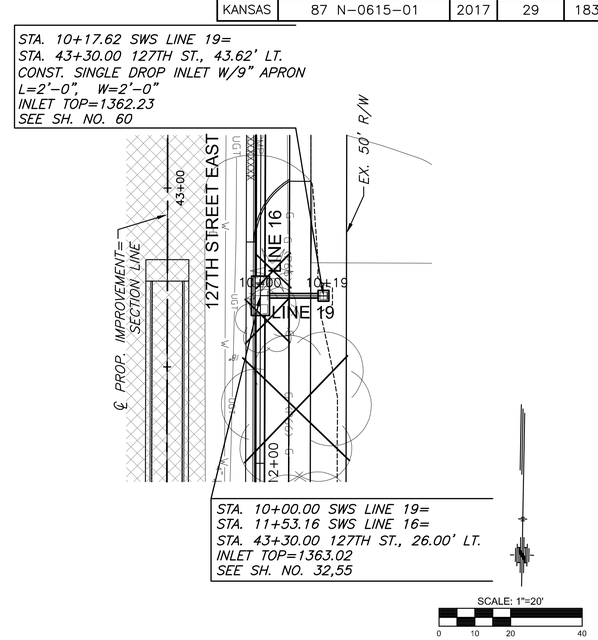

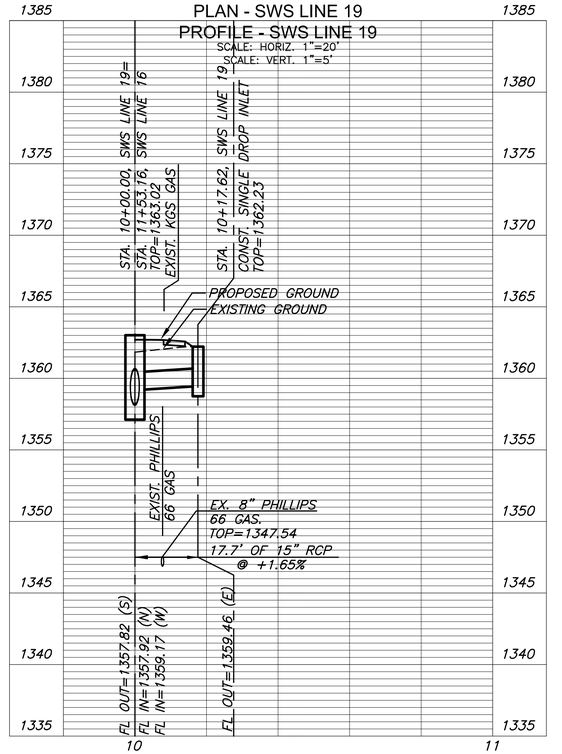

MKEC
Wichita, KS • 316-684-9600

STREET IMPROVEMENTS FOR

127TH STREET EAST

FROM 13TH STREET NORTH TO 21ST STREET NORTH

©2017
MKEC Engineering
All Rights Reserved
www.mkec.com
These drawings and their contents, including, but not limited to, all concepts, designs, & ideas are the exclusive property of MKEC Engineering (MKEC), and may not be used or reproduced in any way without the express consent of MKEC.

"STORM SEWER PLAN & PROFILE LINES 11,12, & 19"

PROJECT NO.	472-85158
DATE	11/29/17
SCALE	1"=20'

DESIGNED	DRAWN	CHECKED
JRA	WNJ	JRA

NO.	REVISION	DATE

SHEET NO.

29 OF 183

Sh. No. 29

J:\PROJECTS\2014\140194090 - COW_ 127TH E 13TH TO 21ST\05-CIVIL\CAD\SWS\14290DP07.DWG

PLOTTED: Wednesday, November 29, 2017 @ 02:39PM

STATE	PROJECT NO.	YEAR	SHEET NO.	TOTAL SHEETS
KANSAS	87 N-0615-01	2017	30	183

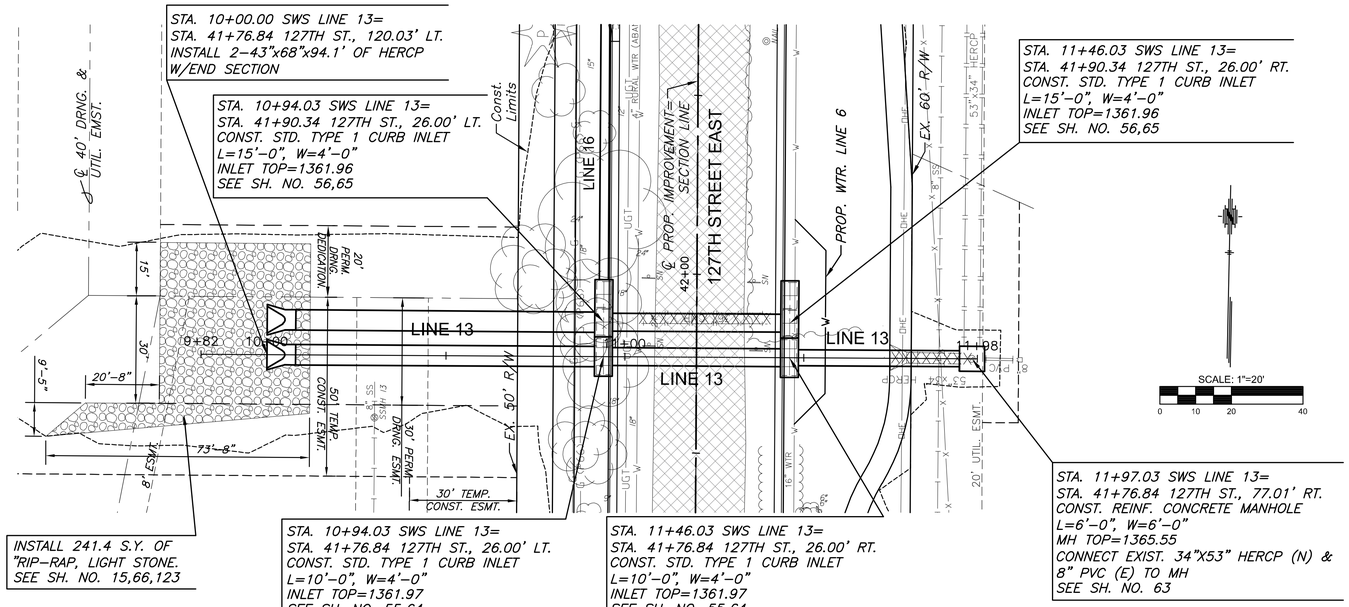

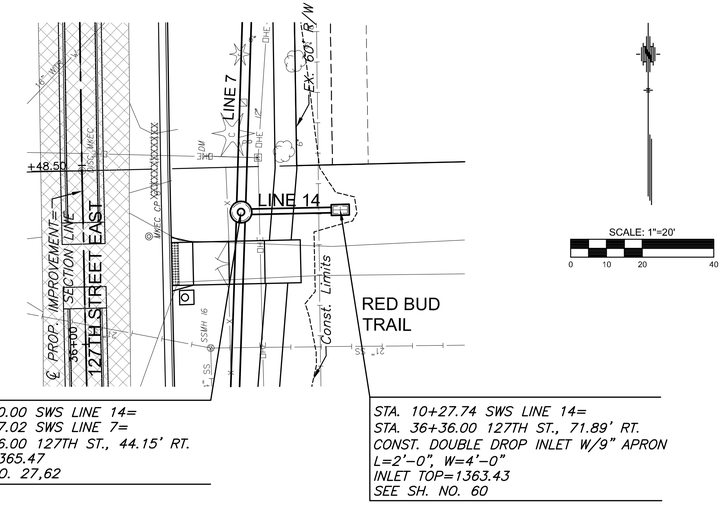

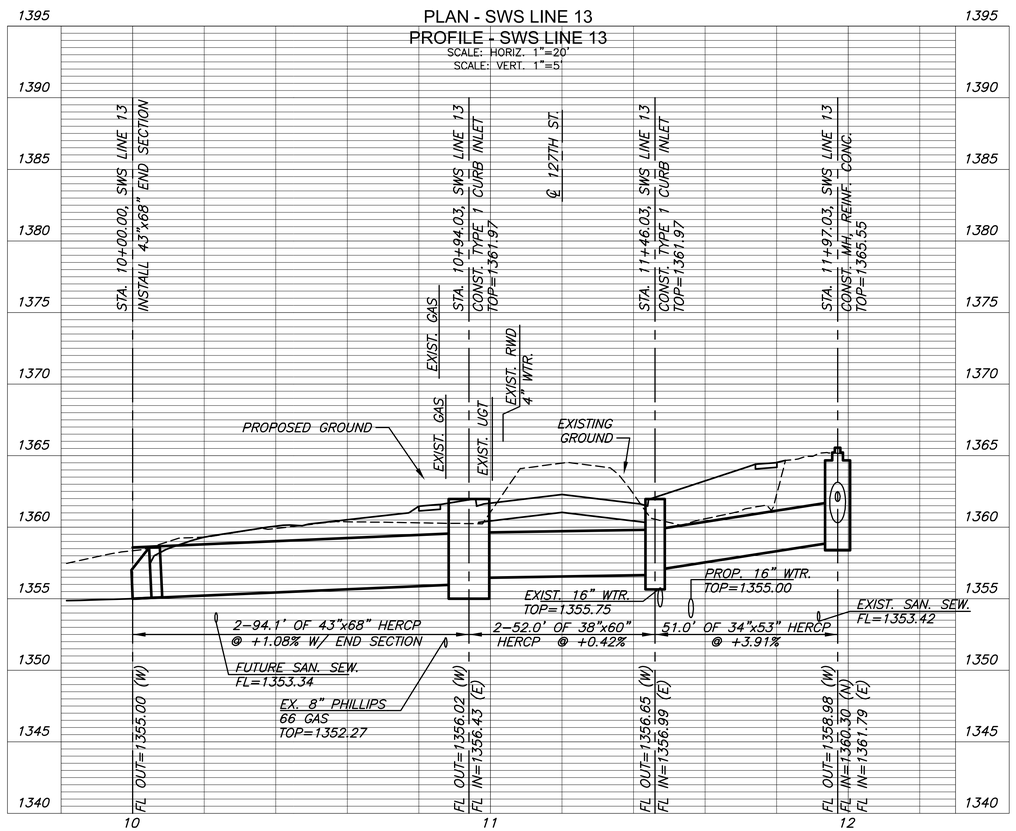

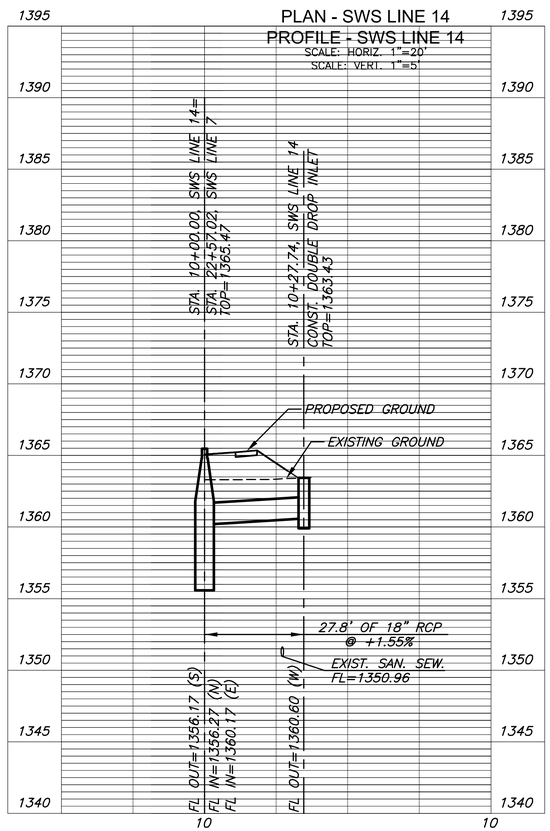

J:\PROJECTS\2013\140194299 - COW_127TH E 13TH TO 21ST\05-CIVIL\CAD\SWS\14299DP08.DWG

MKEC
Wichita, KS • 316-684-9600

STREET IMPROVEMENTS FOR

127TH STREET EAST

FROM 13TH STREET NORTH TO 21ST STREET NORTH

©2017
MKEC Engineering
All Rights Reserved
www.mkec.com
These drawings and their contents, including, but not limited to, all concepts, designs, & ideas are the exclusive property of MKEC Engineering (MKEC), and may not be used or reproduced in any way without the express consent of MKEC.

STORM SEWER PLAN & PROFILE LINES 13 & 14

PROJECT NO.	472-85158
DATE	11/29/17
SCALE	1"=20'

DESIGNED	DRAWN	CHECKED
JRA	WNJ	JRA

NO.	REVISION	DATE

SHEET NO.

30 OF 183

Sh. No. 30

PLOTTED: Wednesday, November 29, 2017 @ 02:36PM

STATE	PROJECT NO.	YEAR	SHEET NO.	TOTAL SHEETS
KANSAS	87 N-0615-01	2017	31	183

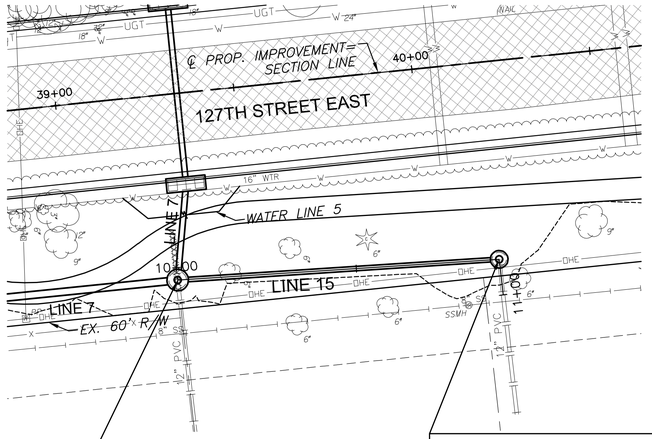

STA. 10+00.00 SWS LINE 15=
STA. 25+49.81 SWS LINE 7=
STA. 39+28.94 127TH ST., 51.94' RT.
MH TOP=1366.85
SEE SH. NO. 27,62

STA. 10+89.98 SWS LINE 15=
STA. 40+18.86 127TH ST., 55.30' RT.
CONST. 4' DIA. SHALLOW MANHOLE
MH TOP=1364.92
SEE SH. NO. 62

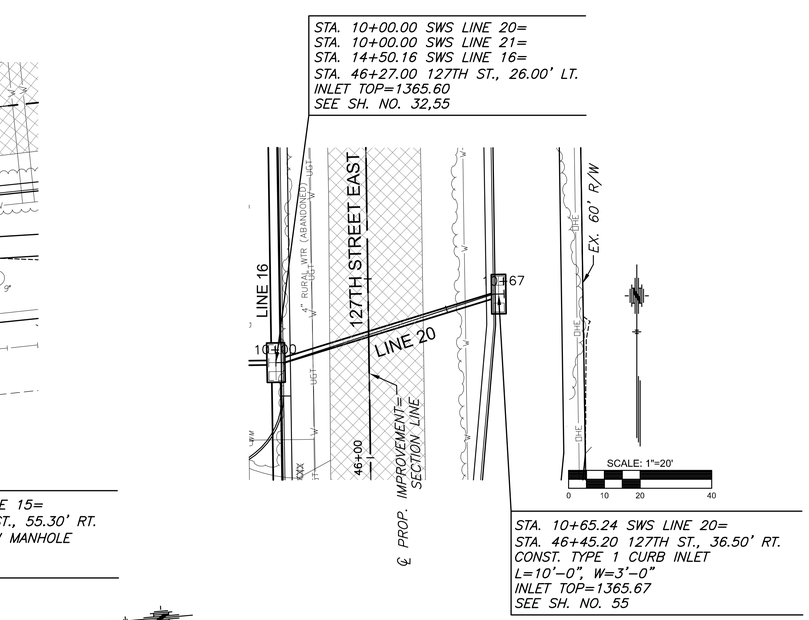

STA. 10+65.24 SWS LINE 20=
STA. 46+45.20 127TH ST., 36.50' RT.
CONST. TYPE 1 CURB INLET
L=10'-0", W=3'-0"
INLET TOP=1365.67
SEE SH. NO. 55

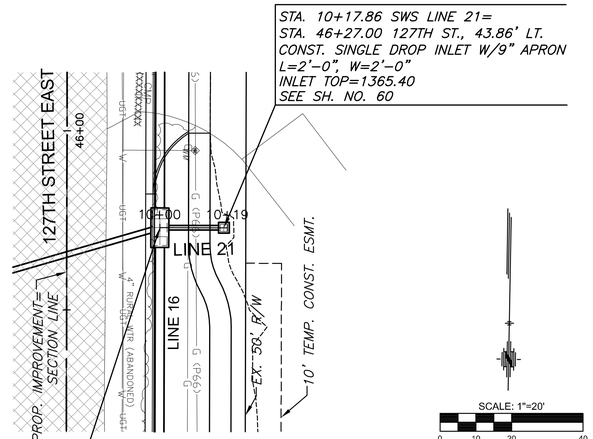

STA. 10+00.00 SWS LINE 21=
STA. 10+00.00 SWS LINE 20=
STA. 14+50.16 SWS LINE 16=
STA. 46+27.00 127TH ST., 26.00' LT.
INLET TOP=1365.60
SEE SH. NO. 32,55

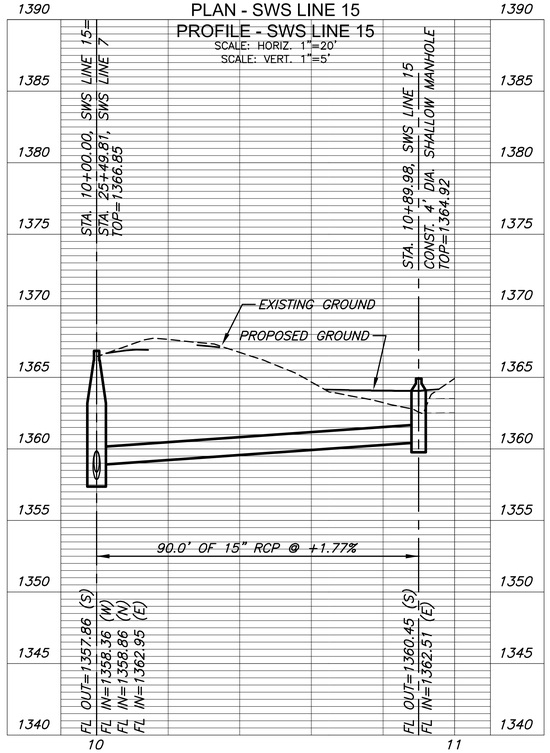

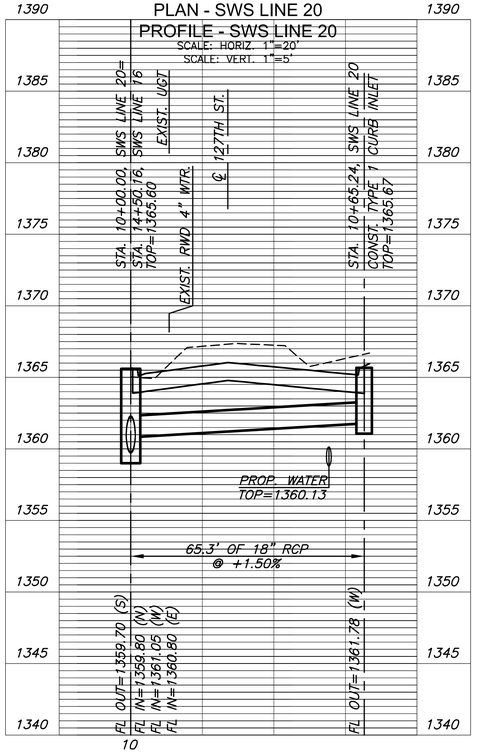

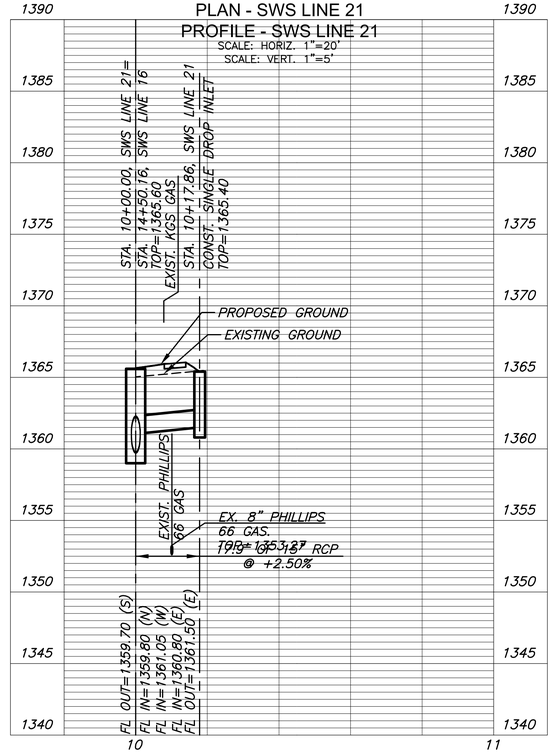

MKEC
Wichita, KS • 316-684-9600

STREET IMPROVEMENTS FOR

127TH STREET EAST

FROM 13TH STREET NORTH TO 21ST STREET NORTH

©2017
MKEC Engineering
All Rights Reserved
www.mkec.com
These drawings and their contents, including, but not limited to, all concepts, designs, & ideas are the exclusive property of MKEC Engineering (MKEC), and may not be used or reproduced in any way without the express consent of MKEC.

"STORM SEWER PLAN & PROFILE LINES 15, 20 & 21"

PROJECT NO.	472-85158
DATE	11/29/17
SCALE	1"=20'

DESIGNED	DRAWN	CHECKED
JRA	WNJ	JRA

NO.	REVISION	DATE

SHEET NO.

31 OF 183

Sh. No. 31

J:\PROJECTS\2014\140104\260 - COV_127TH E 13TH TO 21ST\05-CIVIL\CAD\SWS\14260DP04.DWG

PLOTTED: Wednesday, December 06, 2017 @ 01:40PM

STATE	PROJECT NO.	YEAR	SHEET NO.	TOTAL SHEETS
KANSAS	87 N-0615-01	2017	32	183

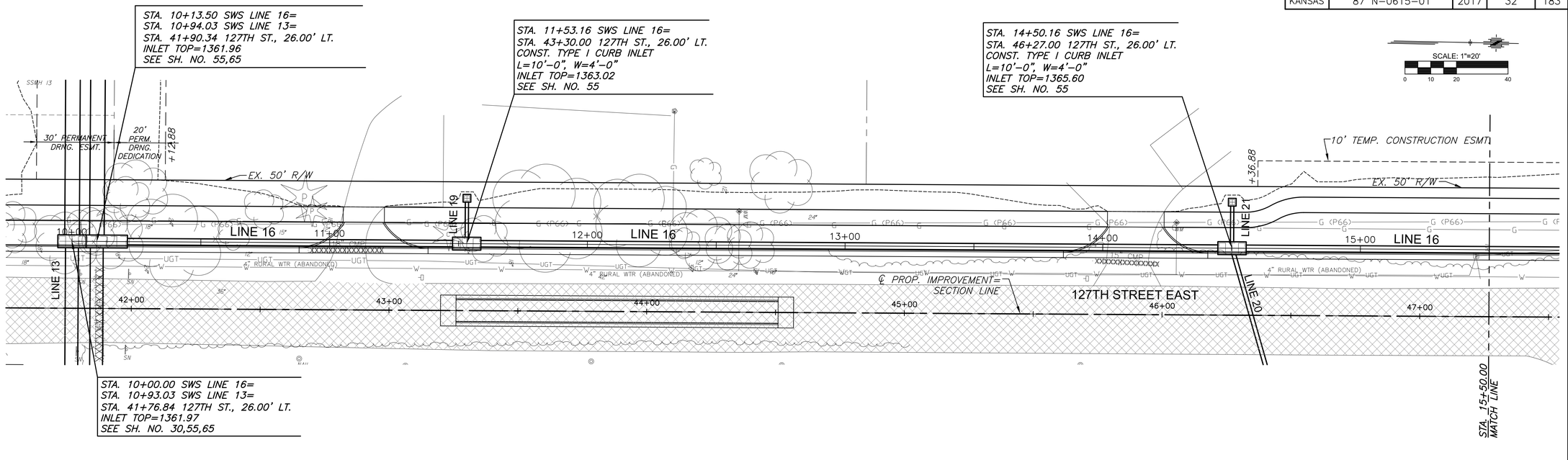

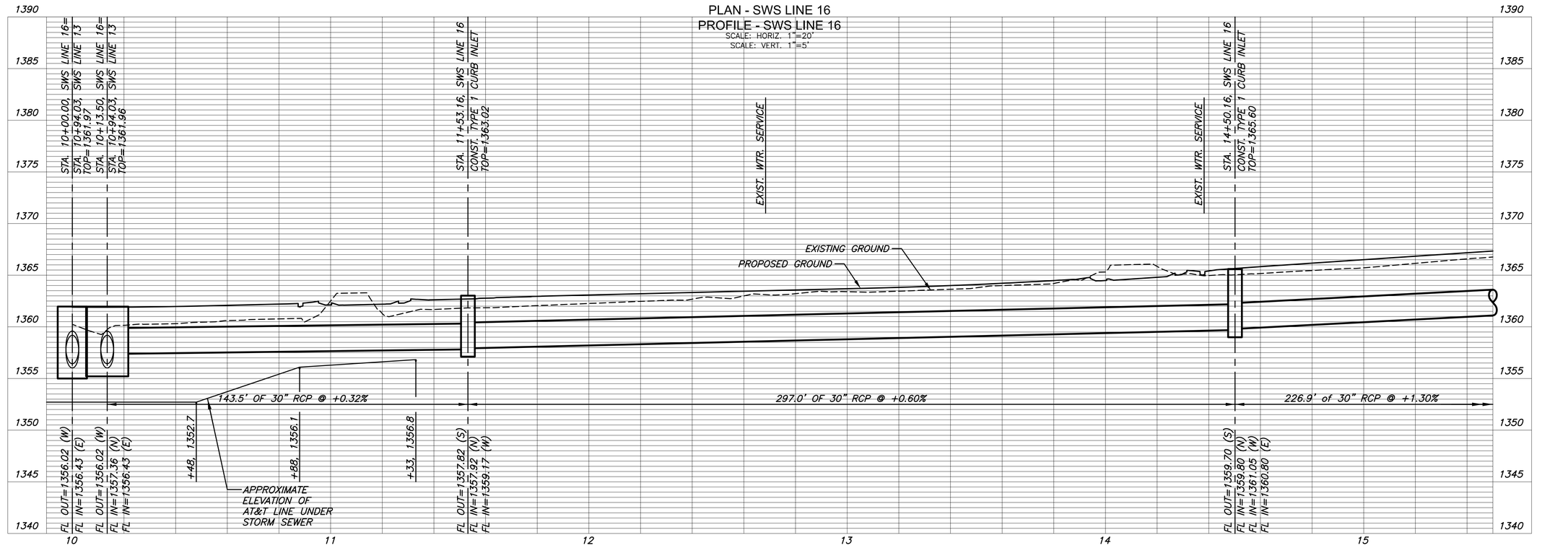

J:\PROJECTS\2014\1401040290 - COV_ 127TH E 13TH TO 21ST\05-CIVIL\CAD\SWS\14290DP11.DWG

MKEC
Wichita, KS • 316-684-9600

STREET IMPROVEMENTS FOR

127TH STREET EAST

FROM 13TH STREET NORTH TO 21ST STREET NORTH

©2017
MKEC Engineering
All Rights Reserved
www.mkec.com
These drawings and their contents, including, but not limited to, all concepts, designs, & ideas are the exclusive property of MKEC Engineering (MKEC), and may not be used or reproduced in any way without the express consent of MKEC.

STORM SEWER PLAN & PROFILE LINE 16

PROJECT NO.	472-85158
DATE	11/29/17
SCALE	1"=20'

DESIGNED	DRAWN	CHECKED
JRA	WNJ	JRA

NO.	REVISION	DATE

SHEET NO.

32 OF 183

Sh. No. 32

PLOTTED: Wednesday, November 29, 2017 @ 02:38PM

STATE	PROJECT NO.	YEAR	SHEET NO.	TOTAL SHEETS
KANSAS	87 N-0615-01	2017	33	183

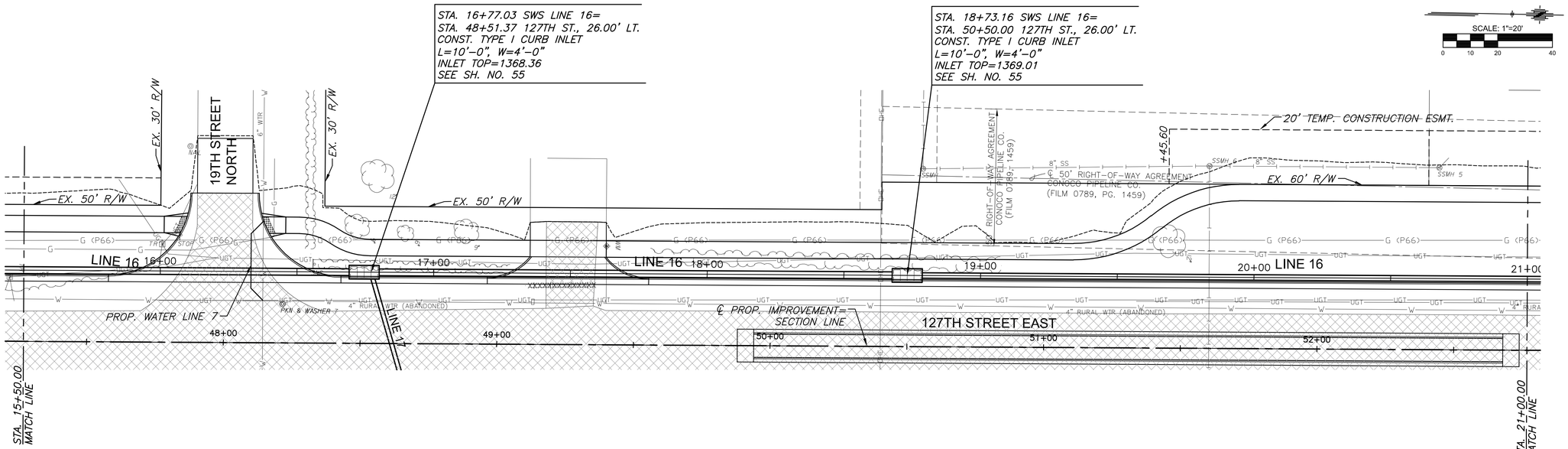

PLAN - SWS LINE 16 CONT. 1
PROFILE - SWS LINE 16 CONT. 1
SCALE: HORIZ. 1"=20'
SCALE: VERT. 1"=5'

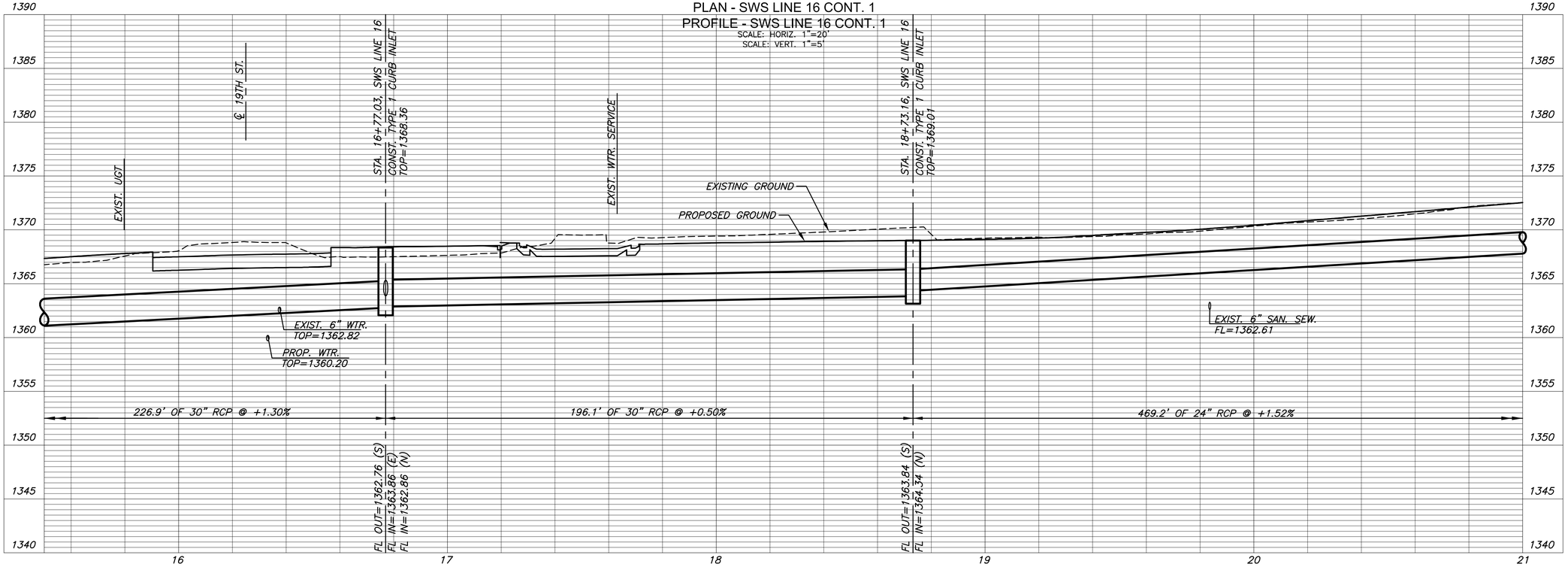

J:\PROJECTS\2014\1401940290 - COW_ 127TH E 13TH TO 21ST\05-CIVIL\CAD\SWS\142902P12.DWG

MKEC
Wichita, KS • 316-684-9600

STREET IMPROVEMENTS FOR

127TH STREET EAST

FROM 13TH STREET NORTH TO 21ST STREET NORTH

©2017
MKEC Engineering
All Rights Reserved
www.mkec.com
These drawings and their contents, including, but not limited to, all concepts, designs, & ideas are the exclusive property of MKEC Engineering (MKEC), and may not be used or reproduced in any way without the express consent of MKEC.

STORM SEWER PLAN & PROFILE LINE 16 CONT. 1

PROJECT NO.	472-85158
DATE	11/29/17
SCALE	1"=20'

DESIGNED	DRAWN	CHECKED
JRA	WNJ	JRA

NO.	REVISION	DATE

SHEET NO.

33 OF 183

Sh. No. 33

PLOTTED: Wednesday, November 29, 2017 @ 02:39PM

STATE	PROJECT NO.	YEAR	SHEET NO.	TOTAL SHEETS
KANSAS	87 N-0615-01	2017	34	183

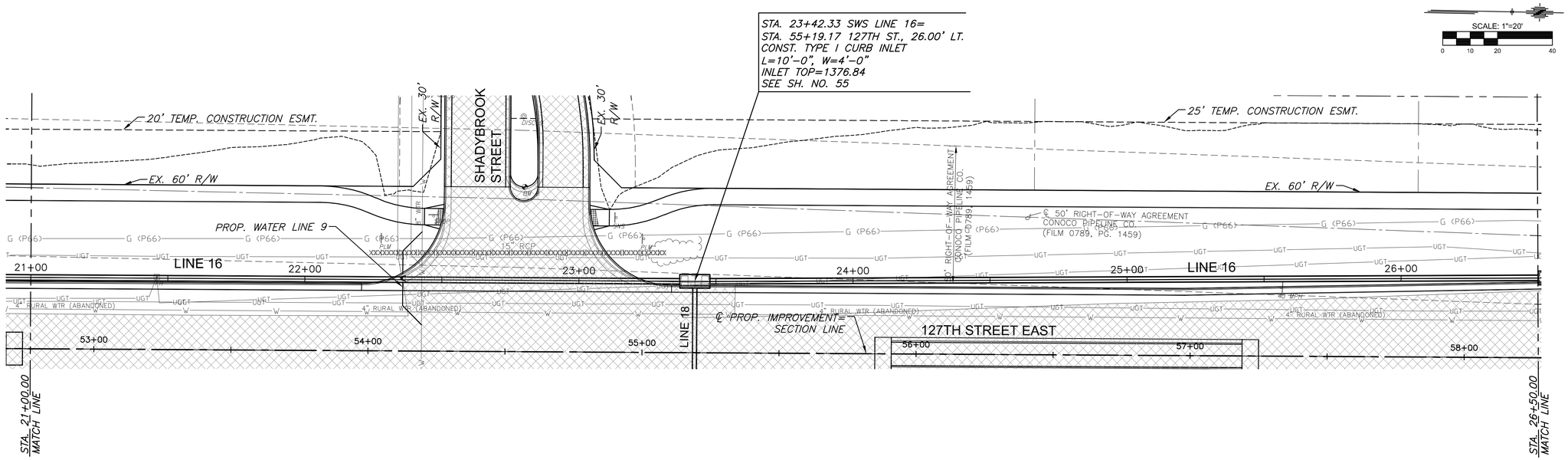

PLAN - SWS LINE 16 CONT. 2
PROFILE - SWS LINE 16 CONT. 2
SCALE: HORIZ. 1"=20'
SCALE: VERT. 1"=5'

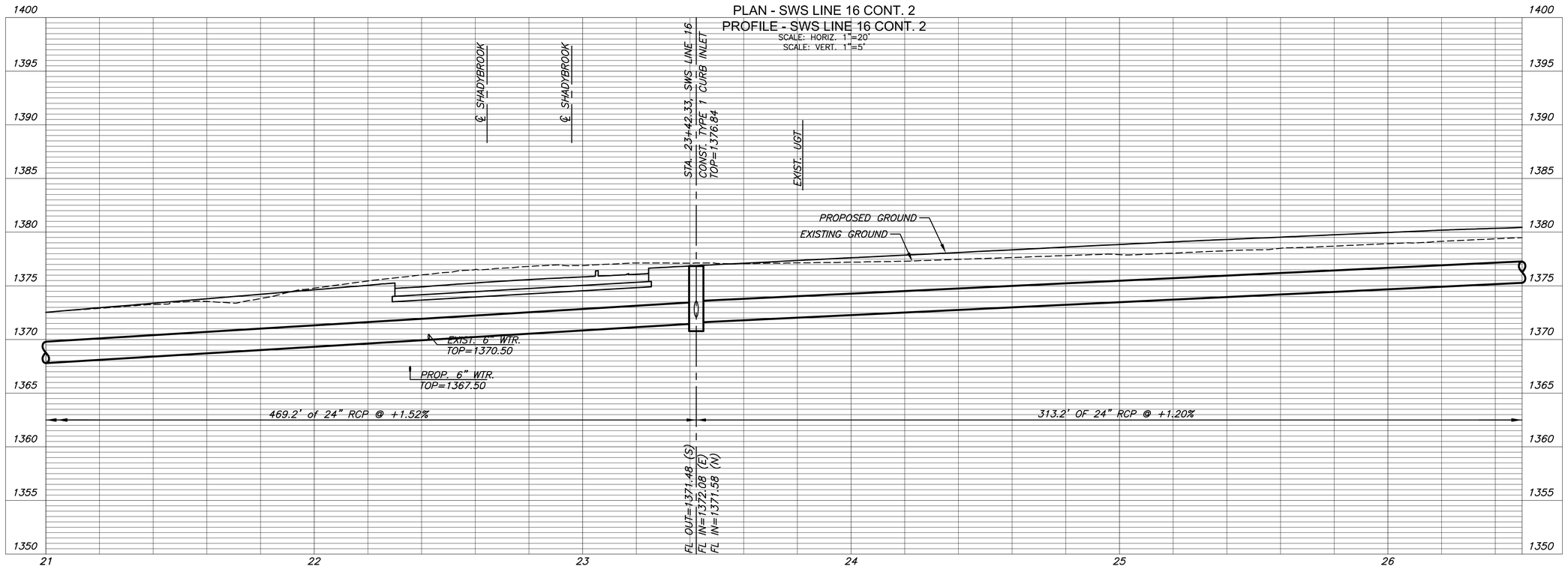

MKEC
Wichita, KS • 316-684-9600

STREET IMPROVEMENTS FOR

127TH STREET EAST

FROM 13TH STREET NORTH TO 21ST STREET NORTH

©2017
MKEC Engineering
All Rights Reserved
www.mkec.com
These drawings and their contents, including, but not limited to, all concepts, designs, & ideas are the exclusive property of MKEC Engineering (MKEC), and may not be used or reproduced in any way without the express consent of MKEC.

STORM SEWER PLAN & PROFILE LINE 16 CONT. 2

PROJECT NO.	472-85158
DATE	11/29/17
SCALE	1"=20'

DESIGNED	DRAWN	CHECKED
JRA	WNJ	JRA

NO.	REVISION	DATE

SHEET NO.

34 OF 183

Sh. No. 34

J:\PROJECTS\2014\1401040290 - COW_ 127TH E 13TH TO 21ST\05-CIVIL\CAD\SWS\14290DP13.DWG

PLOTTED: Wednesday, November 29, 2017 @ 02:40PM

STATE	PROJECT NO.	YEAR	SHEET NO.	TOTAL SHEETS
KANSAS	87 N-0615-01	2017	35	183

MKEC
Wichita, KS • 316-684-9600

127TH STREET EAST

STREET IMPROVEMENTS FOR

FROM 13TH STREET NORTH TO 21ST STREET NORTH

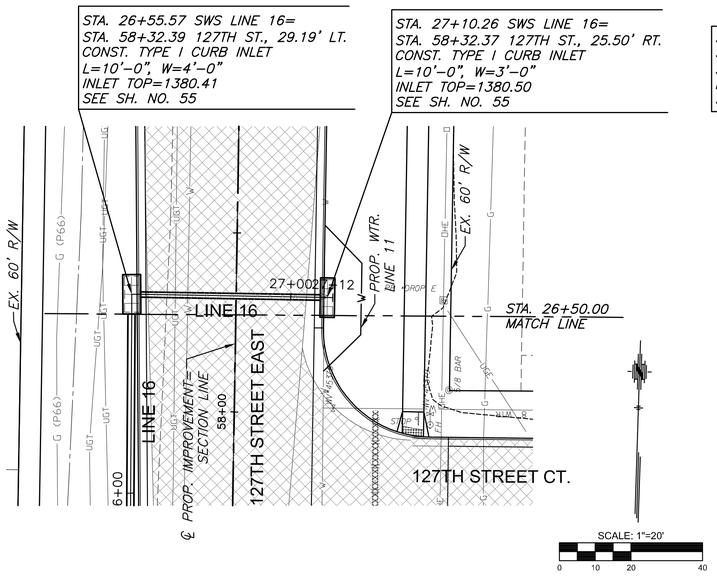

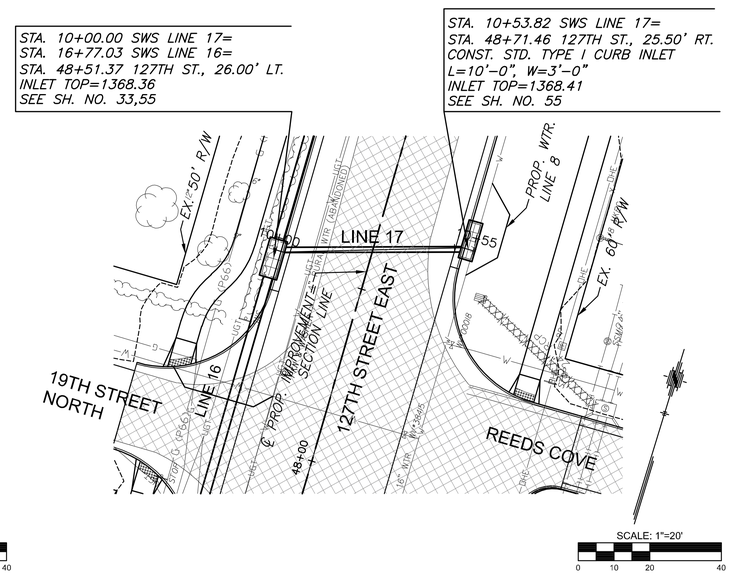

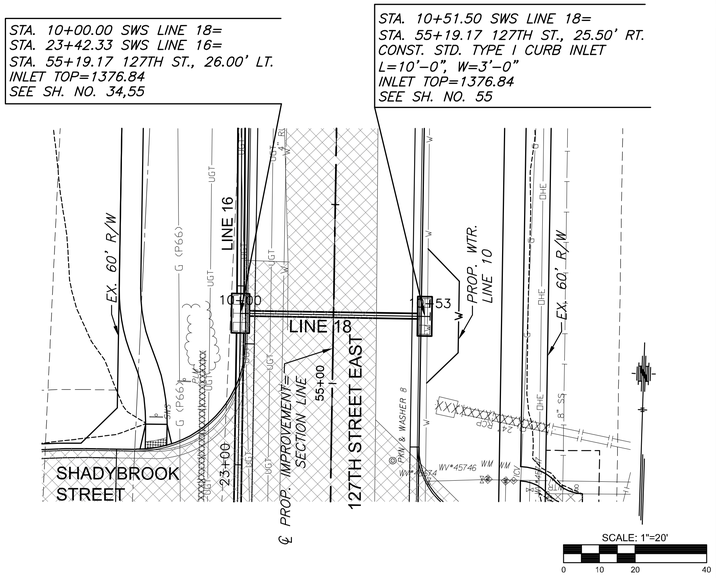

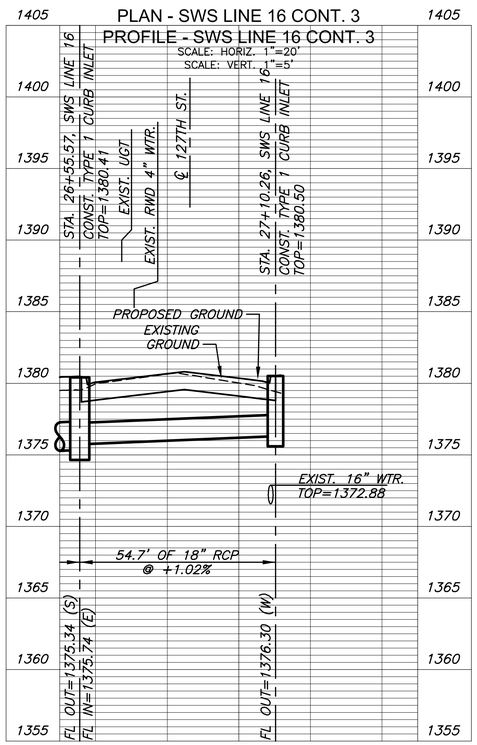

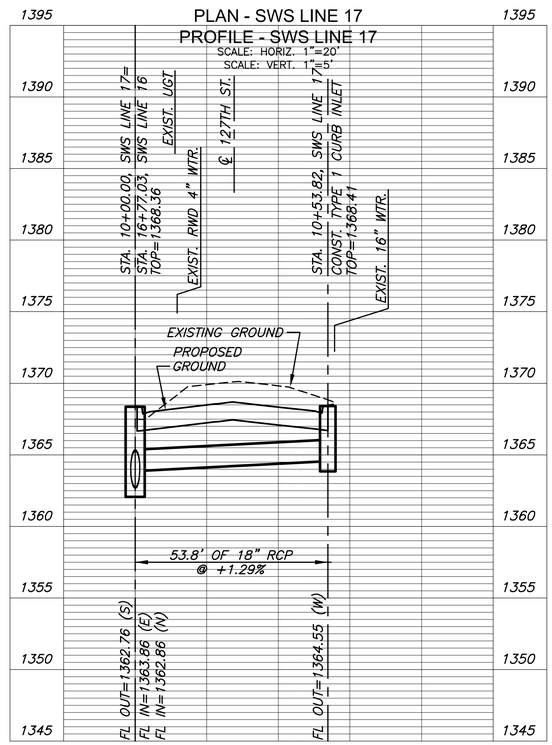

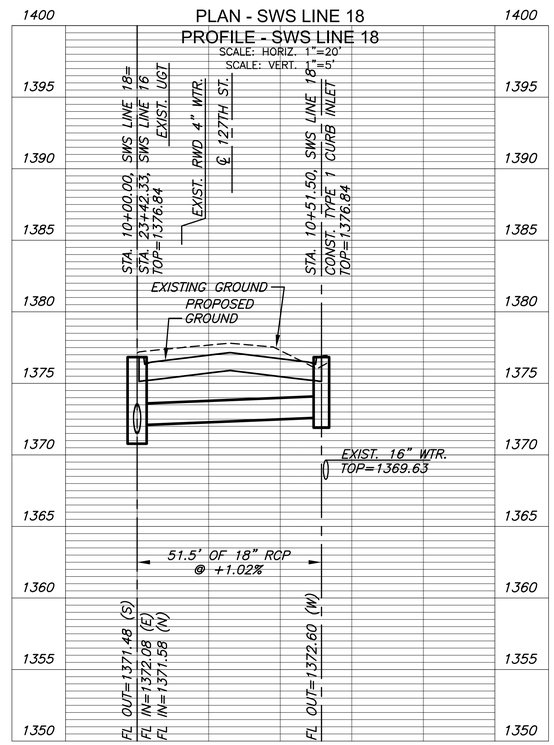

©2017
MKEC Engineering
All Rights Reserved
www.mkec.com
These drawings and their contents, including, but not limited to, all concepts, designs, & ideas are the exclusive property of MKEC Engineering (MKEC), and may not be used or reproduced in any way without the express consent of MKEC.

"STORM SEWER PLAN & PROFILE LINES 16, 17 & 18"

PROJECT NO.	472-85158
DATE	11/29/17
SCALE	1"=20'

DESIGNED	DRAWN	CHECKED
JRA	WNJ	JRA

NO.	REVISION	DATE

SHEET NO.

35 OF 183

Sh. No. 35

J:\PROJECTS\2014\01\041090 - COW_ 127TH E 13TH TO 21ST\05-CIVIL\CAD\SWS\14290DP14.DWG

PLOTTED: Wednesday, November 29, 2017 @ 02:43PM

STATE	PROJECT NO.	YEAR	SHEET NO.	TOTAL SHEETS
KANSAS	87 N-0615-01	2017	36	183

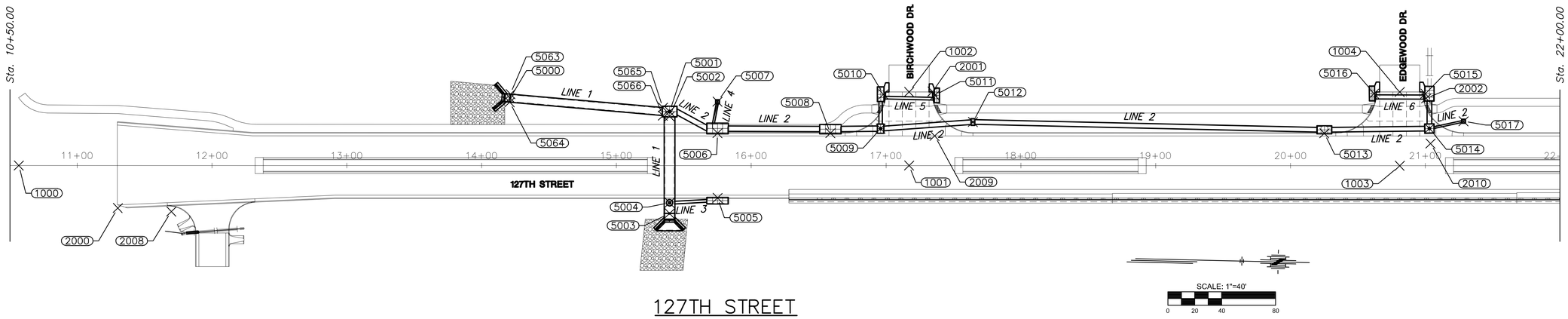

SCALE: 1"=40'
0 20 40 80

127TH STREET

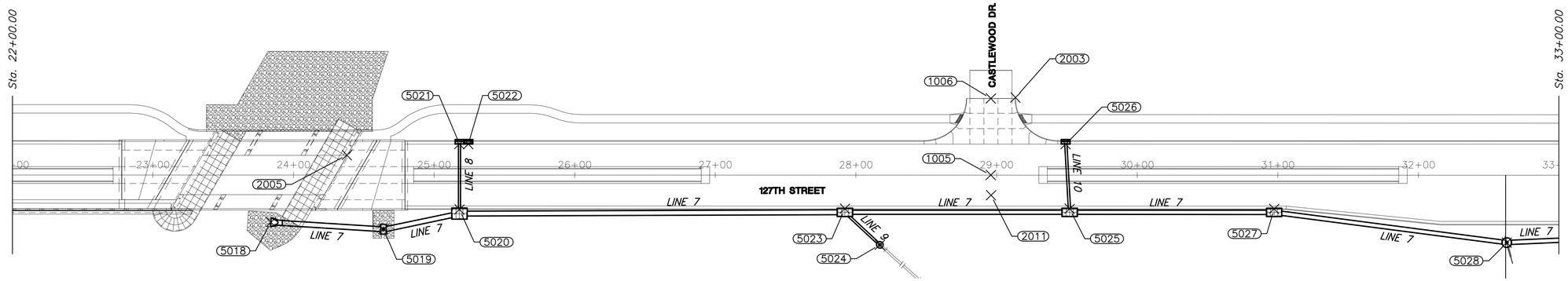

127TH STREET

SCALE: 1"=40'
0 20 40 80

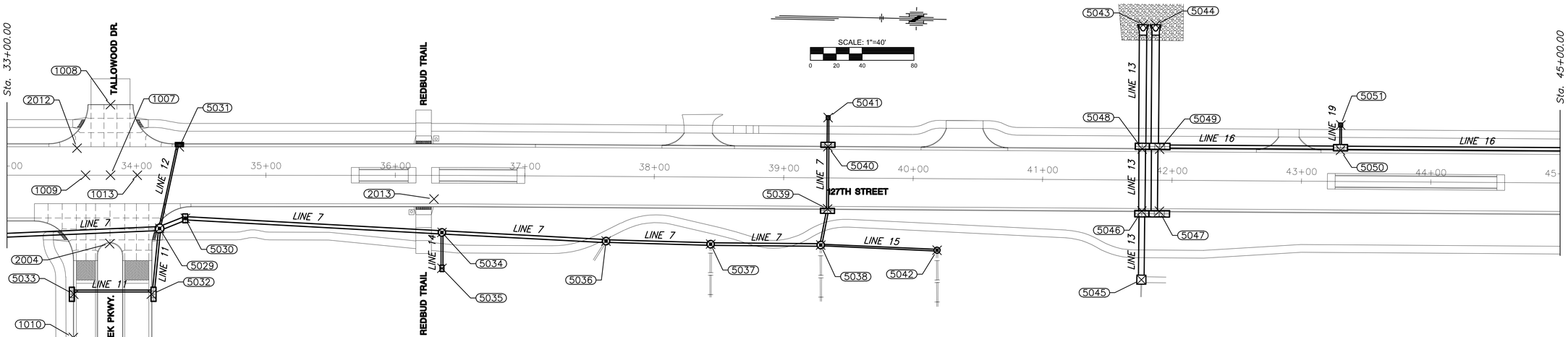

127TH STREET

J:\PROJECTS\2014\1401040299 - COW_127TH E 13TH TO 21ST\06-CIVIL\CAD\BUBBLE\14299_BUBBLE MAP_SWS.DWG

MKEC
Wichita, KS • 316-684-9600

STREET IMPROVEMENTS FOR

127TH STREET EAST

FROM 13TH STREET NORTH TO 21ST STREET NORTH

©2017
MKEC Engineering
All Rights Reserved
www.mkec.com
These drawings and their contents, including, but not limited to, all concepts, designs, & ideas are the exclusive property of MKEC Engineering (MKEC), and may not be used or reproduced in any way without the express consent of MKEC.

SWS BUBBLE MAP

PROJECT NO.	472-85158
DATE	11/29/17
SCALE	1"=40'

DESIGNED	DRAWN	CHECKED
JRA	RAM	JRA

NO.	REVISION	DATE

SHEET NO.

36 OF 183

Sh. No. 36

PLOTTED: Wednesday, November 29, 2017 @ 02:43PM

STATE	PROJECT NO.	YEAR	SHEET NO.	TOTAL SHEETS
KANSAS	87 N-0615-01	2017	37	183

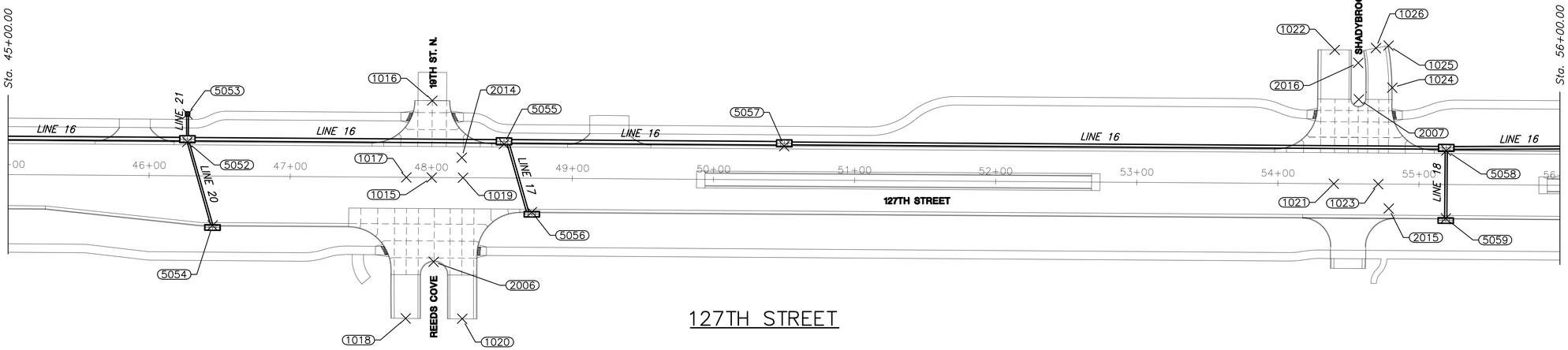

127TH STREET

SCALE: 1"=40'
0 20 40 80

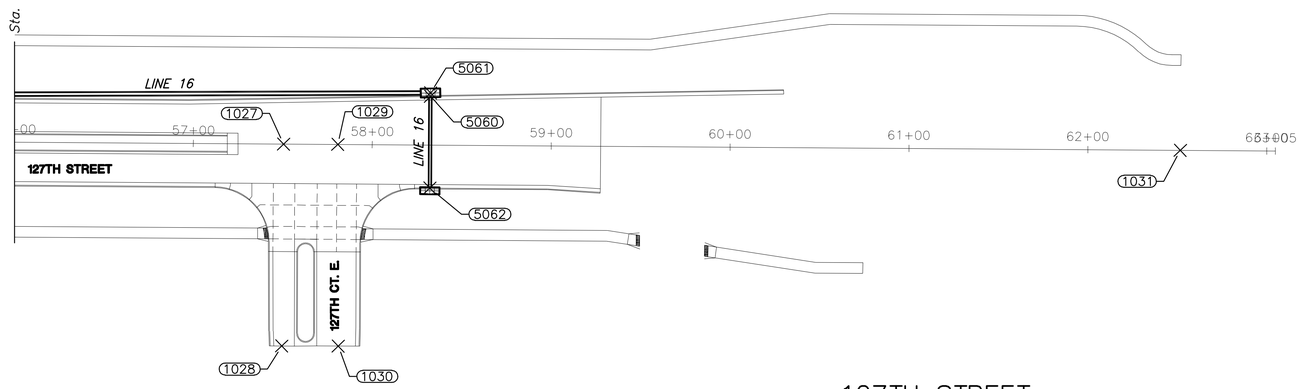

127TH STREET

J:\PROJECTS\2013\140104029\ - COW_127TH E 13TH TO 21ST\05-CIVIL\CAD\BUBBLE\14290_BUBBLE MAP_SWS.DWG

MKEC
Wichita, KS • 316-684-9600

STREET IMPROVEMENTS FOR

127TH STREET EAST

FROM 13TH STREET NORTH TO 21ST STREET NORTH

©2017
MKEC Engineering
All Rights Reserved
www.mkec.com
These drawings and their contents, including, but not limited to, all concepts, designs, & ideas are the exclusive property of MKEC Engineering (MKEC) and may not be used or reproduced in any way without the express consent of MKEC.

SWS BUBBLE MAP

PROJECT NO.	472-85158
DATE	11/29/17
SCALE	1"=40'

DESIGNED	DRAWN	CHECKED
JRA	RAM	JRA

NO.	REVISION	DATE

SHEET NO.

37 OF 183

PLOTTED: Wednesday, November 29, 2017 @ 02:44PM

STATE	PROJECT NO.	YEAR	SHEET NO.	TOTAL SHEETS
KANSAS	87 N-0615-01	2017	38	183

STORM WATER SEWER POINTS						
Point #	Station	Offset	Northing	Easting	Desc.	SWS Line
5000	14+21.10	50.00' LT.	1694981.99	1691550.51	HEADWALL	1
5001	15+39.43	40.00' LT.	1695100.52	1691557.92	SWS MH	1
5002	15+39.43	36.50' LT.	1695100.60	1691561.42	RCBC	1
5003	15+39.43	35.50' RT.	1695102.17	1691633.40	RCBC/HEADWALL	1
5004	15+39.43	27.52' RT.	1695101.99	1691625.42	SWS MH	1
5005	15+75.00	24.00' RT.	1695137.48	1691621.13	TYPE 1 INLET	3
5006	15+75.00	24.00' LT.	1695136.43	1691573.14	TYPE 1 INLET	2
5007	15+75.00	47.33' LT.	1695135.92	1691549.82	DROP INLET	4
5008	16+58.69	24.00' LT.	1695220.10	1691571.31	TYPE 1 INLET	2
5009	16+95.99	27.37' LT.	1695257.32	1691567.13	SWS MH	2
5010	16+98.02	52.89' LT.	1695258.79	1691541.58	TYPE 1 INLET	5
5011	17+36.15	52.02' LT.	1695296.93	1691541.61	TYPE 1 INLET	5
5012	17+64.49	32.33' LT.	1695325.69	1691560.67	DROP INLET	2
5013	20+25.19	24.00' LT.	1695586.51	1691563.32	TYPE 1 INLET	2
5014	21+03.10	27.50' LT.	1695664.33	1691558.12	SWS MH	2
5015	21+00.12	53.34' LT.	1695660.78	1691532.35	TYPE 1 INLET	6
5016	20+62.03	53.47' LT.	1695622.70	1691533.05	TYPE 1 INLET	6
5017	21+28.46	32.94' LT.	1695689.56	1691552.13	DROP INLET	2
5018	23+83.88	33.60' RT.	1695946.38	1691613.08	END SECTION	7
5019	24+63.97	38.55' RT.	1696026.56	1691616.27	SWS MH	7

STORM WATER SEWER POINTS						
Point #	Station	Offset	Northing	Easting	Desc.	SWS Line
5020	25+18.00	24.50' RT.	1696080.26	1691601.05	TYPE 1 INLET	7
5021	25+18.00	22.00' LT.	1696079.25	1691554.56	TYPE 2 INLET	8
5022	25+24.34	22.00' LT.	1696085.59	1691554.42	TYPE 2 INLET	8
5023	27+92.13	24.00' RT.	1696354.31	1691594.57	TYPE 1 INLET	7
5024	28+17.04	49.66' RT.	1696379.78	1691619.67	SWS MH	9
5025	29+51.98	24.00' RT.	1696514.13	1691591.08	TYPE 1 INLET	7
5026	29+49.15	22.00' LT.	1696510.30	1691545.15	TYPE 2 INLET	10
5027	30+97.41	24.00' RT.	1696659.52	1691587.91	TYPE 1 INLET	7
5028	32+62.91	47.98' RT.	1696825.51	1691608.27	SWS MH	7
5029	34+17.88	41.18' RT.	1696980.29	1691598.10	SWS MH	7
5030	34+37.64	33.27' RT.	1696999.88	1691589.75	DROP INLET	7
5031	34+33.15	22.00' LT.	1696994.18	1691534.59	TYPE 2 INLET	12
5032	34+11.61	92.00' RT.	1696975.13	1691649.04	TYPE 1 INLET	11
5033	33+51.61	92.00' RT.	1696915.15	1691650.34	TYPE 1 INLET	11
5034	36+36.00	44.15' RT.	1697198.43	1691596.30	SWS MH	7
5035	36+36.00	71.89' RT.	1697199.03	1691624.03	DROP INLET	14
5036	37+63.13	50.06' RT.	1697325.33	1691600.22	SWS MH	7
5037	38+43.94	51.83' RT.	1697406.16	1691600.78	SWS MH	7
5038	39+28.94	51.94' RT.	1697491.15	1691599.62	SWS MH	7
5039	39+34.00	24.00' RT.	1697495.79	1691571.61	TYPE 1 INLET	7

STORM WATER SEWER POINTS						
Point #	Station	Offset	Northing	Easting	Desc.	SWS Line
5040	39+34.00	24.00' LT.	1697495.07	1691523.61	TYPE 1 INLET	7
5041	39+34.00	46.54' LT.	1697494.73	1691501.08	DROP INLET	7
5042	40+18.86	55.30' RT.	1697581.11	1691601.63	SWS MH	15
5043	41+76.84	120.03' LT.	1697736.44	1691423.96	END SECTION	13
5044	41+86.59	120.03' LT.	1697746.19	1691423.81	END SECTION	13
5045	41+76.84	77.01' RT.	1697739.39	1691620.97	SWS MH	13
5046	41+76.84	24.00' RT.	1697738.60	1691567.97	TYPE 1 INLET	13
5047	41+87.84	24.00' RT.	1697752.09	1691567.76	TYPE 1 INLET	13
5048	41+76.84	24.00' LT.	1697737.88	1691519.97	TYPE 1 INLET	13
5049	41+87.84	24.00' LT.	1697751.37	1691519.77	TYPE 1 INLET	16
5050	43+30.00	24.00' LT.	1697891.02	1691517.68	TYPE 1 INLET	19
5051	43+30.00	43.62' LT.	1697890.73	1691498.06	DROP INLET	16
5052	46+27.00	24.00' LT.	1698187.99	1691513.22	TYPE 1 INLET	21
5053	46+27.00	43.86' LT.	1698187.69	1691493.36	DROP INLET	20
5054	46+45.20	35.00' RT.	1698207.07	1691571.94	TYPE 1 INLET	16
5055	48+51.37	24.00' LT.	1698412.33	1691509.86	TYPE 1 INLET	17
5056	48+71.46	24.00' RT.	1698433.14	1691557.55	TYPE 1 INLET	16
5057	50+50.00	24.00' LT.	1698610.94	1691506.88	TYPE 1 INLET	16
5058	55+19.17	24.00' LT.	1699080.06	1691499.85	TYPE 1 INLET	18
5059	55+19.17	24.00' RT.	1699080.77	1691547.85	TYPE 1 INLET	16

STORM WATER SEWER POINTS						
Point #	Station	Offset	Northing	Easting	Desc.	SWS Line
5060	58+32.43	27.19' LT.	1699393.24	1691491.97	TYPE 1 INLET	16
5061	58+32.39	29.19' LT.	1699393.16	1691489.97	CTR. TYPE 1 INLET	16
5062	58+32.37	24.00' RT.	1699393.95	1691543.15	TYPE 1 INLET	1
5063	14+21.36	52.99' LT.	1694982.19	1691547.51	RCBC	1
5064	14+20.83	47.01' LT.	1694981.80	1691553.50	RCBC	1
5065	15+34.43	43.01' LT.	1695095.46	1691555.02	RCBC	1
5066	15+34.43	36.99' LT.	1695095.59	1691561.04	RCBC	

CONTROL POINTS					
Point #	Station	Offset	Northing	Easting	Desc.
2000	11+30.02	31.54' RT.	1694692.77	1691638.38	BM 1
2001	17+34.46	54.79' LT.	1695295.18	1691538.88	BM 2
2002	21+00.69	49.86' LT.	1695661.43	1691535.82	BM 3
2003	29+13.45	55.14' LT.	1696473.88	1691512.80	BM 4
2004	33+79.35	52.82' RT.	1696942.03	1691610.56	BM 5
2005	24+37.95	14.16' LT.	1695999.39	1691564.15	BM 6
2006	48+02.06	59.76' RT.	1698364.29	1691594.35	BM 7
2007	54+56.94	60.03' LT.	1699017.30	1691464.76	BM 8
2008	11+69.76	34.15' RT.	1694732.56	1691640.12	SDMD
2009	17+36.13	21.98' LT.	1695297.56	1691571.65	PKNW
2010	21+03.93	16.40' LT.	1695665.39	1691569.19	PKNW
2011	28+96.07	14.34' RT.	1696458.02	1691582.64	SDMD
2012	33+54.08	20.93' LT.	1696915.15	1691537.39	PKNW
2013	36+29.76	18.35' RT.	1697191.63	1691570.64	SDMD
2014	48+21.56	14.23' LT.	1698382.67	1691520.08	PKNW
2015	54+78.73	17.27' RT.	1699040.24	1691541.72	PKNW
2016	54+56.36	85.82' LT.	1699016.33	1691438.98	DISC

BASELINE POINTS					
Point #	Station	Offset	Northing	Easting	Desc.
1000	10+56.63	0.00'	1694618.70	1691608.45	BEGIN PROJECT
1001	17+17.09	0.00'	1695279.01	1691594.03	INT. BIRCHWOOD DR.
1002	17+17.09	54.59' LT.	1695277.82	1691539.45	BIRCHWOOD DR. LIMITS
1003	20+81.07	0.00'	1695642.91	1691586.09	INT. EDGEWOOD DR.
1004	20+81.07	54.63' LT.	1695641.71	1691531.48	EDGEWOOD DR. LIMITS
1005	28+95.98	0.00'	1696457.62	1691568.31	INT. CASTLEWOOD DR.
1006	28+95.98	54.52' LT.	1696456.43	1691513.80	CASTLEWOOD DR. LIMITS
1007	33+79.93	0.00'	1696941.45	1691557.75	INT. TALLOWOOD DR.
1008	33+79.93	54.55' LT.	1696940.26	1691503.21	TALLOWOOD DR. LIMITS
1009	33+60.61	0.00'	1696922.14	1691558.17	INT. ROCKY CREEK PKWY. (E.B.)
1010	33+51.11	125.41' RT.	1696915.38	1691683.76	PC
1011	33+52.20	153.97' RT.	1696917.09	1691712.29	PT
1012	33+61.67	153.20' RT.	1696926.54	1691711.31	ROCKY CREEK PKWY. LIMITS (E.B.)
1013	34+00.61	0.00'	1696962.13	1691557.30	INT. ROCKY CREEK PKWY. (W.B.)
1014	34+00.61	141.00' RT.	1696965.21	1691698.26	ROCKY CREEK PKWY. LIMITS (W.B.)
1015	48+00.37	0.00'	1698361.70	1691534.62	INT. 19TH ST. N.
1016	48+00.37	54.56' LT.	1698360.88	1691480.07	19TH ST. N. LIMITS
1017	47+82.29	0.00'	1698343.63	1691534.89	INT. REEDS COVE (E.B.)
1018	47+82.57	100.00' RT.	1698345.40	1691634.88	REEDS COVE LIMITS (E.B.)
1019	48+22.42	0.00'	1698383.75	1691534.29	INT. REEDS COVE (W.B.)

BASELINE POINTS					
Point #	Station	Offset	Northing	Easting	Desc.
1020	48+22.64	100.00' RT.	1698385.47	1691634.28	REEDS COVE LIMITS (W.B.)
1021	54+39.63	0.00'	1699000.88	1691525.04	INT. SHADYBROOK ST. (E.B.)
1022	54+39.63	95.00' LT.	1698999.46	1691430.05	SHADYBROOK ST. LIMITS (E.B.)
1023	54+71.17	0.00'	1699032.43	1691524.57	INT. SHADYBROOK ST. (W.B.)
1024	54+80.66	68.40' LT.	1699040.89	1691456.03	PC
1025	54+77.79	98.23' LT.	1699037.57	1691426.25	PT
1026	54+68.86	96.48' LT.	1699028.66	1691428.13	SHADYBROOK ST. LIMITS (W.B.)
1027	57+50.48	0.00'	1699311.70	1691520.38	INT. 127TH CT. E. (E.B.)
1028	57+50.20	112.83' RT.	1699313.11	1691633.20	127TH CT. E. LIMITS (E.B.)
1029	57+80.79	0.00'	1699342.01	1691519.93	INT. 127TH CT. E. (W.B.)
1030	57+81.79	112.63' RT.	1699344.70	1691632.53	127TH CT. E. LIMITS (W.B.)
1031	62+51.70	0.00'	1699812.87	1691512.87	END PROJECT

MKEC
Wichita, KS • 316-684-9600

STREET IMPROVEMENTS FOR

127TH STREET EAST

FROM 13TH STREET NORTH TO 21ST STREET NORTH

©2017
MKEC Engineering
All Rights Reserved
www.mkec.com
These drawings and their contents, including, but not limited to, all concepts, designs, & ideas are the exclusive property of MKEC Engineering (MKEC), and may not be used or reproduced in any way without the express consent of MKEC.

SWS BUBBLE MAP

PROJECT NO.	472-85158
DATE	11/29/17
SCALE	1"=40'

DESIGNED	DRAWN	CHECKED
JRA	RAM	JRA

NO.	REVISION	DATE

SHEET NO.

38 OF 183

J:\PROJECTS\2014\140104\0290 - COW_127TH E 13TH TO 21ST\05-CIVIL\CAD\BUBBLE\14290_BUBBLE MAP_SWS.DWG

PLOTTED: Wednesday, November 29, 2017 @ 02:44PM

STATE	PROJECT NO.	YEAR	SHEET NO.	TOTAL SHEETS
KANSAS	87 N-0615-01	2017	39	183

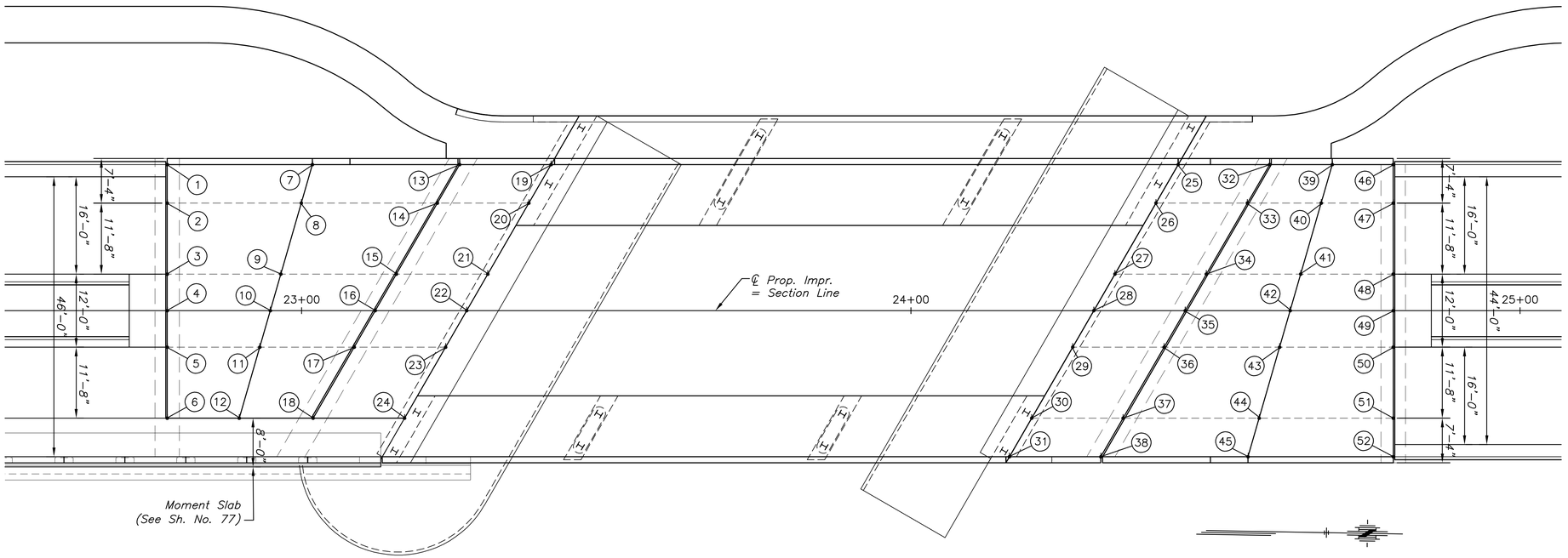

APPROACH SLAB ELEVATION PLAN

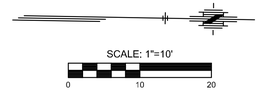

SOUTH APPROACH SLAB POINTS			
Point #	Northing	Easting	Elevation
1	1695839.19	1691557.80	1343.93
2	1695839.33	1691564.13	1344.12
3	1695839.59	1691575.80	1344.47
4	1695839.72	1691581.80	1344.65
5	1695839.85	1691587.79	1344.47
6	1695840.10	1691599.46	1344.12
7	1695863.02	1691557.28	1344.27
8	1695861.33	1691563.65	1344.41
9	1695858.23	1691575.39	1344.66
10	1695856.63	1691581.43	1344.80
11	1695855.03	1691587.46	1344.63
12	1695851.92	1691599.20	1344.30

SOUTH APPROACH SLAB POINTS			
Point #	Northing	Easting	Elevation
13	1695887.18	1691556.75	1344.62
14	1695883.67	1691563.17	1344.70
15	1695877.19	1691574.98	1344.86
16	1695873.85	1691581.05	1344.96
17	1695870.52	1691587.12	1344.80
18	1695864.04	1691598.94	1344.48
19	1695902.19	1691556.43	1344.83
20	1695898.67	1691562.84	1344.90
21	1695892.19	1691574.65	1345.02
22	1695888.86	1691580.72	1345.09
23	1695885.53	1691586.80	1344.96
24	1695879.05	1691598.61	1344.71

NORTH APPROACH SLAB POINTS			
Point #	Northing	Easting	Elevation
25	1696005.11	1691554.18	1345.76
26	1696001.59	1691560.59	1345.83
27	1695995.11	1691572.40	1345.95
28	1695991.78	1691578.48	1346.01
29	1695988.44	1691584.55	1345.89
30	1695981.96	1691596.36	1345.65
31	1695978.45	1691602.77	1345.51
32	1696020.11	1691553.85	1345.80
33	1696016.60	1691560.26	1345.90
34	1696010.12	1691572.07	1346.07
35	1696006.78	1691578.15	1346.15
36	1696003.45	1691584.22	1346.01
37	1695996.97	1691596.03	1345.73
38	1695993.45	1691602.45	1345.57

NORTH APPROACH SLAB POINTS			
Point #	Northing	Easting	Elevation
39	1696030.40	1691553.63	1345.83
40	1696028.71	1691560.00	1345.96
41	1696025.61	1691571.74	1346.20
42	1696024.01	1691577.77	1346.31
43	1696022.41	1691583.81	1346.16
44	1696019.30	1691595.55	1345.84
45	1696017.62	1691601.92	1345.67
46	1696040.40	1691553.41	1345.86
47	1696040.54	1691559.74	1346.02
48	1696040.79	1691571.41	1346.32
49	1696040.92	1691577.40	1346.48
50	1696041.05	1691583.40	1346.30
51	1696041.31	1691595.07	1345.95
52	1696041.44	1691601.40	1345.76

MKEC
Wichita, KS • 316-684-9600

STREET IMPROVEMENTS FOR

127TH STREET EAST

FROM 13TH STREET NORTH TO 21ST STREET NORTH

©2017
MKEC Engineering
All Rights Reserved
www.mkec.com
These drawings and their contents, including, but not limited to, all concepts, designs, & ideas are the exclusive property of MKEC Engineering (MKEC) and may not be used or reproduced in any way without the express consent of MKEC.

APPROACH SLAB GRADING PLAN

PROJECT NO.	472-85158
DATE	11/29/17
SCALE	1"=10'

DESIGNED	DRAWN	CHECKED
JRA	WNJ	JRA

NO.	REVISION	DATE

SHEET NO.

39 OF 183

J:\PROJECTS\2014\1401940290 - COW_127TH E 13TH TO 21ST\05-CIVIL\CAD\PAVT\4290EP20.DWG

PLOTTED: Wednesday, November 29, 2017 @ 02:49PM

STATE	PROJECT NO.	YEAR	SHEET NO.	TOTAL SHEETS
KANSAS	87 N-0615-01	2017	40	183

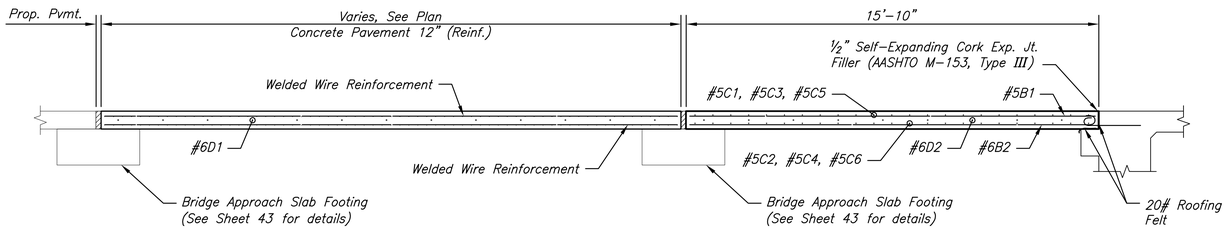

LONGITUDINAL SECTION

Shown parallel to ℄ Prop. Imp.
(South Approach Looking West) (North Approach Looking East)

BILL OF REINFORCING STEEL
(All Typ. Lane Slabs & Joint Bars)

(Grade 60, Epoxy-Coated)

△ See Bending Diagram

Bar	B1	△B2	△C1	C2	△C3
No.	96	185	45	45	60
Size	5	6	5	5	5
Length	14'-7"	15'-3"	9'-3"	8'-1"	14'-2"
Bar	C4	△C5	C6	D1	D2
No.	60	30	30	141	42
Size	5	5	5	6	6
Length	13'-0"	14'-7"	13'-5"	3'-0"	4'-0"

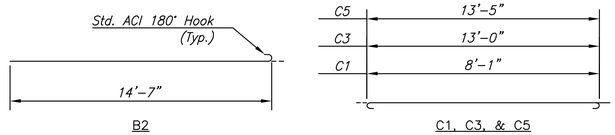

GENERAL NOTES

UNIT STRESSES:

Concrete $f'c = 4$ ksi
Reinforcing Steel (Epoxy-Coated) $f_y = 60$ ksi

1. *Special Concrete Bridge Approach shall be paid for as sq. yds of "Concrete Approach 12", Bridge" and includes all work and materials required to construct the approach slab as shown on this sheet.*
2. *Formed joints shall be edged with 1/4" radius tool for length of joint.*
3. *Clearance from the face of concrete for all reinforcing steel, unless noted, shall be 2".*
4. *All casting to existing concrete, if cast previously, shall be brush blasted and power washed prior to casting concrete.*
5. *All reinforcing steel shall be epoxy coated. All epoxy coating damaged or removed through cutting shall be replaced as required by Specifications. WWF does not require epoxy-coating.*
6. *Standard reinforcing bar hooks in accordance with the latest ACI specifications shall be used throughout.*
7. *All work and materials required for installation of expansion joints shall be subsidiary to the bid item "Concrete Approach 12", Bridge".*
8. *Skew Angle to match existing bridge E.W.S.*
9. *Cork Exp. Jt. and 20# Roofing Felt at each bridge E.W.S. shall be subsidiary to "Concrete Approach 12", Bridge".*

BAR BENDING DIAGRAMS

All dimensions are out to out of bars.

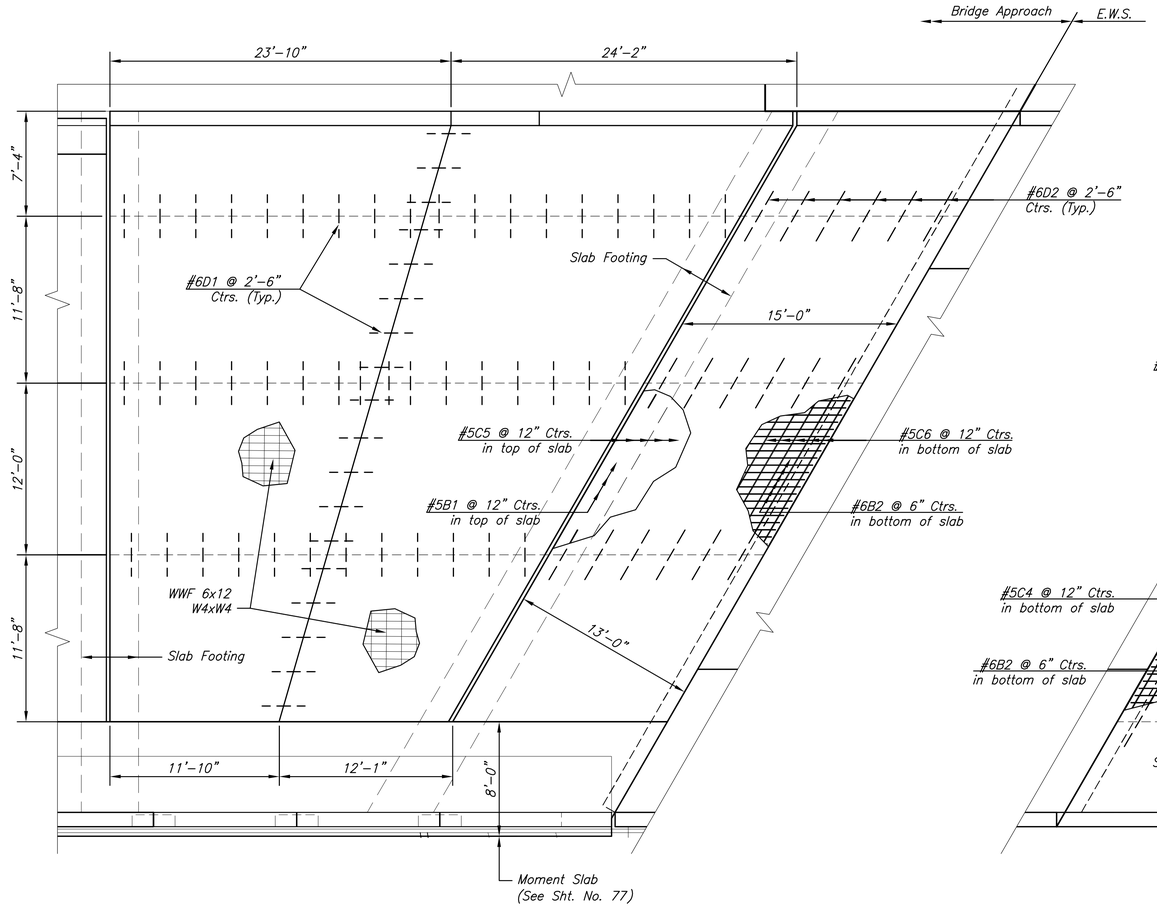

SOUTH APPROACH SLAB

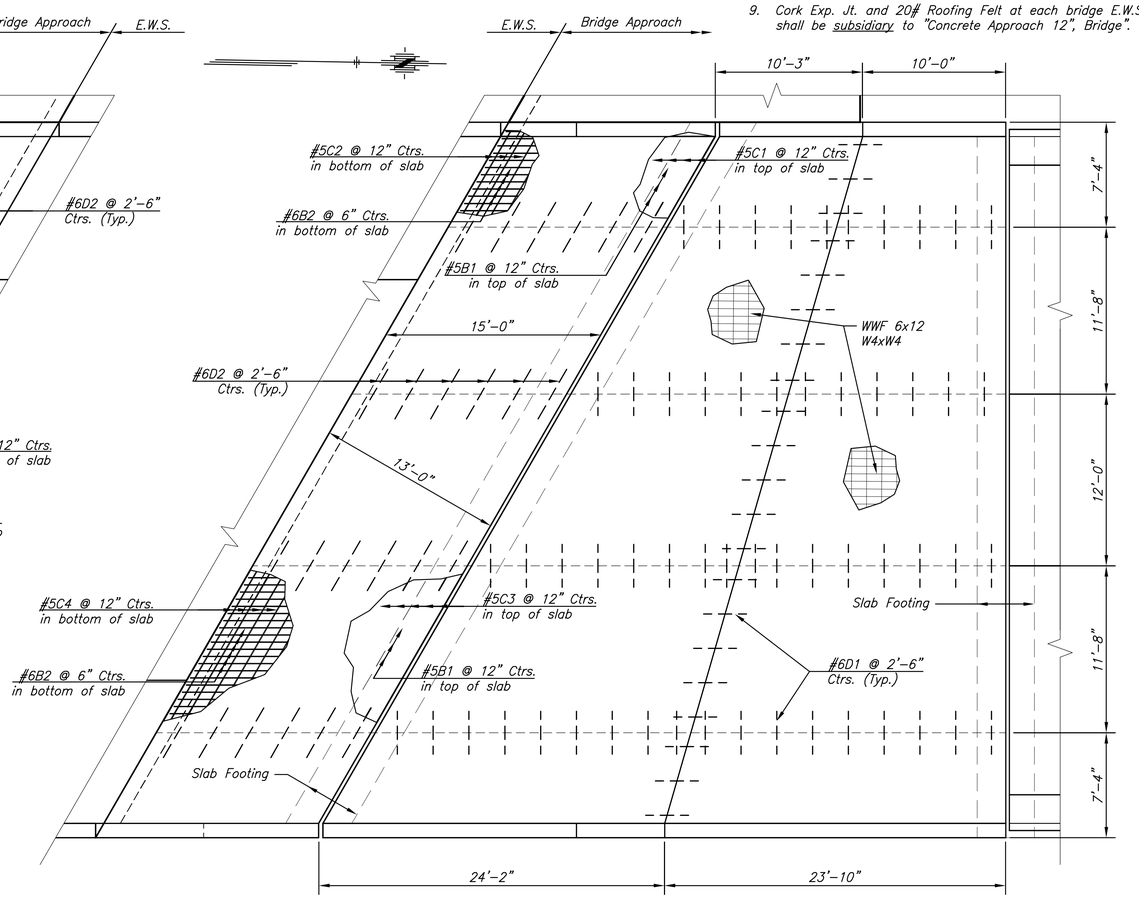

NORTH APPROACH SLAB

MKEC
Wichita, KS • 316-684-9600

STREET IMPROVEMENTS FOR

127TH STREET EAST

FROM 13TH STREET NORTH TO 21ST STREET NORTH

©2017
MKEC Engineering
All Rights Reserved
www.mkec.com
These drawings and their contents, including, but not limited to, all concepts, designs, & ideas are the exclusive property of MKEC Engineering (MKEC), and may not be used or reproduced in any way without the express consent of MKEC.

APPROACH SLAB DETAILS

PROJECT NO.	472-85158
DATE	11/29/17
SCALE	NTS

DESIGNED	DRAWN	CHECKED
KJS	RAM	KJS

NO.	REVISION	DATE

SHEET NO.

40 OF 183

Sh. No. 40

J:\PROJECTS\2014\1040\290 - COW_ 127TH E 13TH TO 21ST\05-CIVIL\CAD\PAV\1429ED06.DWG

PLOTTED: Wednesday, November 29, 2017 @ 02:49PM

STATE	PROJECT NO.	YEAR	SHEET NO.	TOTAL SHEETS
KANSAS	87 N-0615-01	2017	41	183

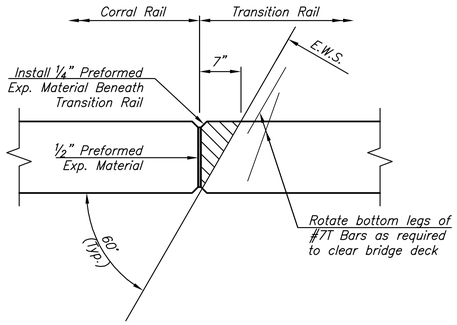

DETAIL A

(Typical Plan at Transition Rail to Corral Rail Joint)

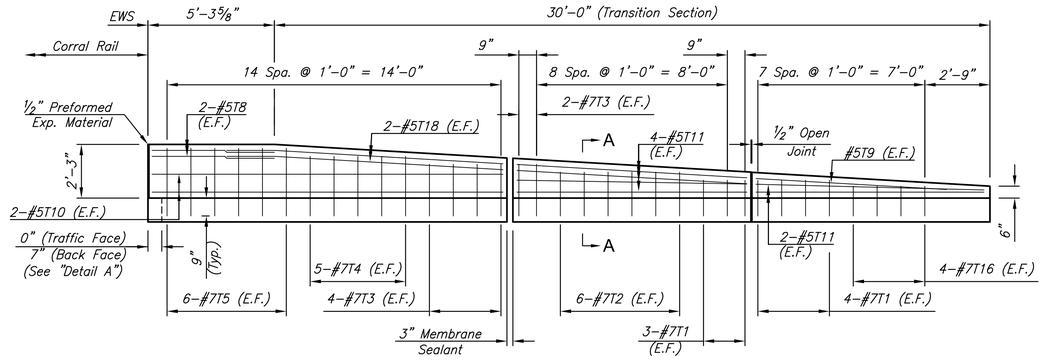

APPROACH SLAB
TRANSITION RAIL ELEVATION

(Along Traffic Face, Phase 2-North Approach Slab)
Scale: 1"=3'

GENERAL NOTES

UNIT STRESSES:

Concrete f'_c = 4 ksi
Reinforcing Steel (Epoxy-Coated) f_y = 60 ksi

1. *The Transition Rail shall be constructed such that the Traffic Face of the Rail is 24'-0" from the ℄ Proposed Improvements.*
2. *Quantities shown on this sheet are provided for information only.*
3. *All materials, labor, and equipment required for the construction of Transition Rail shall be considered subsidiary to the bid item "Concrete Safety Barrier, Special".*

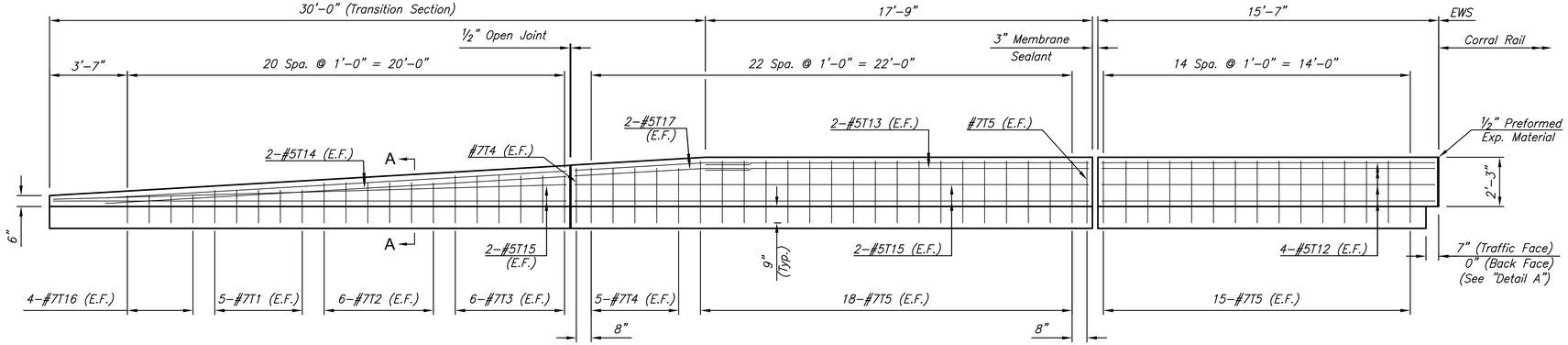

APPROACH SLAB
TRANSITION RAIL ELEVATION

(Along Traffic Face, Phase 2-South Approach Slab & Phase 3-North Approach Slab)
Scale: 1"=3'

BILL OF REINFORCING STEEL
(Grade 60, Epoxy-Coated)

	Straight Bars				Bent Bars			
Transition Rail	T8	#5	4	5'-2"	T1	#7	34	3'-6"
	T9	#5	2	8'-0"	T2	#7	36	3'-10"
	T10	#5	4	8'-6"	T3	#7	36	4'-2"
	T11	#5	12	9'-7"	T4	#7	34	4'-6"
	T12	#5	16	15'-3"	T5	#7	148	4'-10"
	T13	#5	8	17'-6"	T16	#7	24	3'-3"
	T14	#5	8	21'-1"				
	T15	#5	16	23'-6"				
	T17	#5	8	8'-0"				
	T18	#5	4	11'-7"				

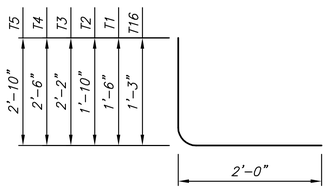

#7T Bars Bending Diagram

LEGEND

NF = Near Face
FF = Far Face
EF = Each Face

APPROACH SLAB TRANSITION RAIL QUANTITIES
(Provided For Information Only)

Location \ Item	Concrete (Cu. Yds.)	Reinforcing Steel (Epoxy-Coated)(Lbs.)
Approach Rails	10.6	4,044

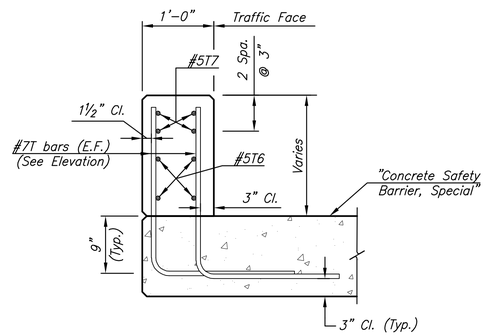

SECTION A-A

J:\PROJECTS\2014\1401040290 - COW_127TH E 13TH TO 21ST\05-CIVIL\CAD\PAV\1426ED08.DWG

MKEC
Wichita, KS • 316-684-9600

STREET IMPROVEMENTS FOR

127TH STREET EAST

FROM 13TH STREET NORTH TO 21ST STREET NORTH

©2017
MKEC Engineering
All Rights Reserved
www.mkec.com
These drawings and their contents, including, but not limited to, all concepts, designs, & ideas are the exclusive property of MKEC Engineering (MKEC), and may not be used or reproduced in any way without the express consent of MKEC.

CONCRETE SAFETY BARRIER TRANSITIONS

PROJECT NO.	472-85158
DATE	11/29/17
SCALE	AS SHOWN

DESIGNED	DRAWN	CHECKED
KJS	RAM	KJS

NO.	REVISION	DATE

SHEET NO.

41 OF 183

PLOTTED: Wednesday, November 29, 2017 @ 02:48PM

STATE	PROJECT NO.	YEAR	SHEET NO.	TOTAL SHEETS
KANSAS	87 N-0615-01	2017	42	183

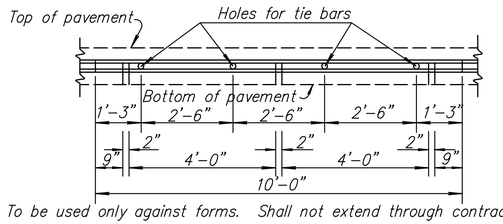

To be used only against forms. Shall not extend through contraction joints.

METAL STRIP FOR
LONGITUDINAL CONSTRUCTION JOINT (10'-0")

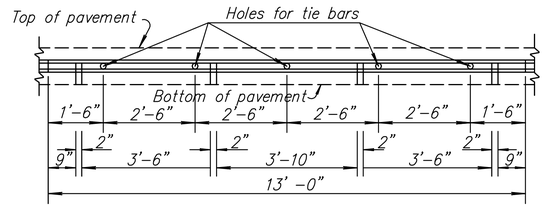

To be used only against forms. Shall not extend through contraction joints.

METAL STRIP FOR
LONGITUDINAL CONSTRUCTION JOINT (13'-0")

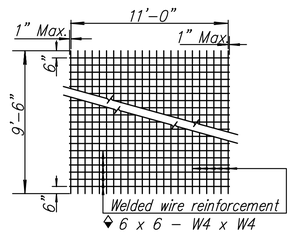

♦ 6 x 6 – W4 x W4

TYPICAL SHEET OF WELDED WIRE REINFORCEMENT
FOR SPECIAL BRIDGE APPROACH PAVEMENT

♦ *Note: Epoxy coated #3 bars longitudinally @ 12" ctrs. & #3 bars transversely @ 18" ctrs. may be substituted for each layer of epoxy coated welded wire reinforcement.*

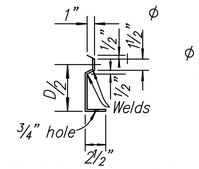

ϕ *Snap–in leg or other approved designs may be used in lieu of welded leg.*

SECTION OF RECESSED
FORM LEG



DETAIL OF LAP FOR WELDED WIRE REINFORCEMENT

The lap shall extend beyond the first transverse or bag wire of each sheet.

The sheet shall be wired securely at the edges and at intervals not to exceed 2'–6" for the full width of the sheet. Approximate weight of welded wire reinforcement = 58 lbs. per 100 sq. ft. Other methods for fastening the sheets of welded wire reinforcement at the laps may be used with the approval of the Engineer.

GENERAL NOTES

All work shall be done in conformity with the Standard Specifications applicable to the project.

The cost of all bars and joint material shown on this sheet is to be included in the bid price for Concrete Pavement.

At each planned transverse joint location, a 4 to 6 inch wide strip of the pavement surface shall be protected from the texturing operation to provide a transverse textureless surface centered over the joint sawcut.

All sawed joints on this project shall be filled with sealant in accordance with Standard Specifications.

The 4 inch edge curb shall be constructed integral with the approach slab shoulder.

All materials and work required for this construction shall be Subsidiary to the concrete approach slab.

Tie bars shall be evenly spaced along the length of the slab and no tie bars shall be within 12" of contraction joint.

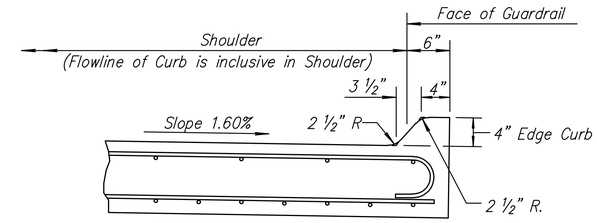

SECTION A-A

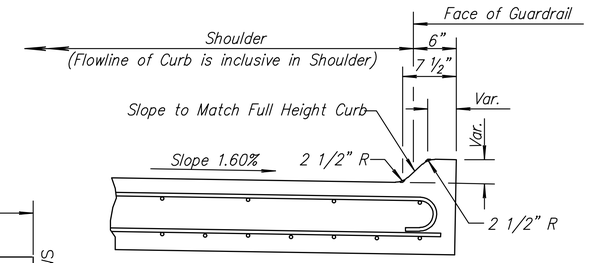

SECTION B-B

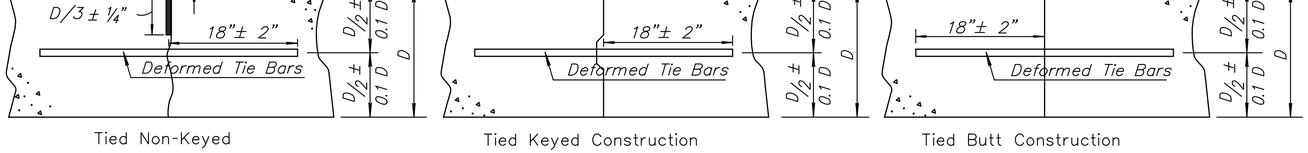

Tied Non-Keyed | Tied Keyed Construction | Tied Butt Construction

LONGITUDINAL JOINTS

Note: For longitudinal construction joints the contractor has the option of using either the keyed or butt type. Place deformed tie bars mid–depth of the shoulder.

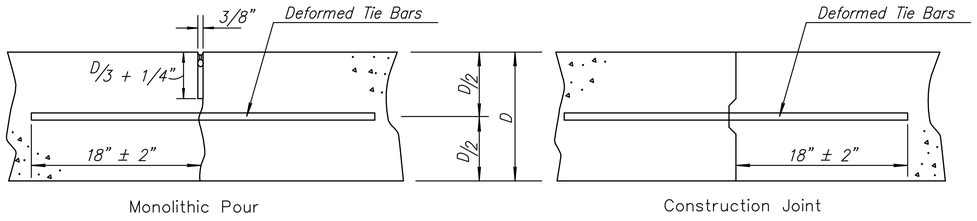

Monolithic Pour | Construction Joint

TRANSVERSE JOINTS

Note: A construction joint is required when the concrete placement has been interrupted for a substantial length of time or at the end of a day's placement.

⊛ *No 4" Curb transition when adjacent to Flume Inlet.*

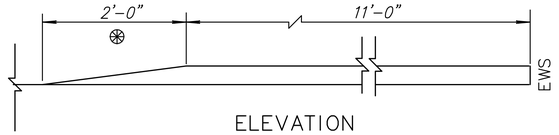

ELEVATION

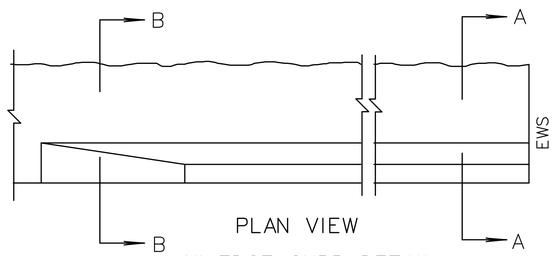

PLAN VIEW
4" EDGE CURB DETAIL

NO.	DATE	REVISIONS	BY	APP'D
13	5-17-13	Revised Note, Longitudinal Joints	S.W.K.	J.O.B.
12	5-14-09	Pres. Relief Jt. to RD712/tie bar lab.	S.W.K.	J.O.B.
11	10-23-08	Revised Sec. A-A and Sec. B-B	S.W.K.	J.O.B.
10	10-3-07	Add. manufacturer jt. size recom'd.	S.W.K.	J.O.B.

KANSAS DEPARTMENT OF TRANSPORTATION

MISCELLANEOUS DETAILS FOR CONCRETE BRIDGE APPROACH PAVEMENT

RD711

FHWA APPROVAL	10-23-13	APP'D. James_O._Brewer	
DESIGNED	DETAILED	QUANTITIES	TRACED Bowser
DESIGN CK.	DETAIL CK.	QUAN.CK.	TRACE CK. King

KDOT Graphics Certified 10-28-2013

Sh. No. 42

KDOT Graphics Certified

J:\PROJECTS\2014\1401040290 - COW_12TH E 13TH TO 21ST\05-CIVIL\CAD\BRIDGE\1-1429RD711.DWG

PLOTTED: Wednesday, November 29, 2017 @ 02:48PM

STATE	PROJECT NO.	YEAR	SHEET NO.	TOTAL SHEETS
KANSAS	87 N-0615-01	2017	43	183

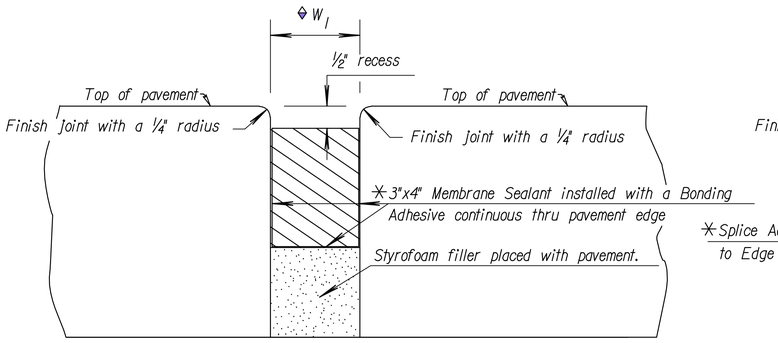

ELEVATION PRESSURE RELIEF JT.

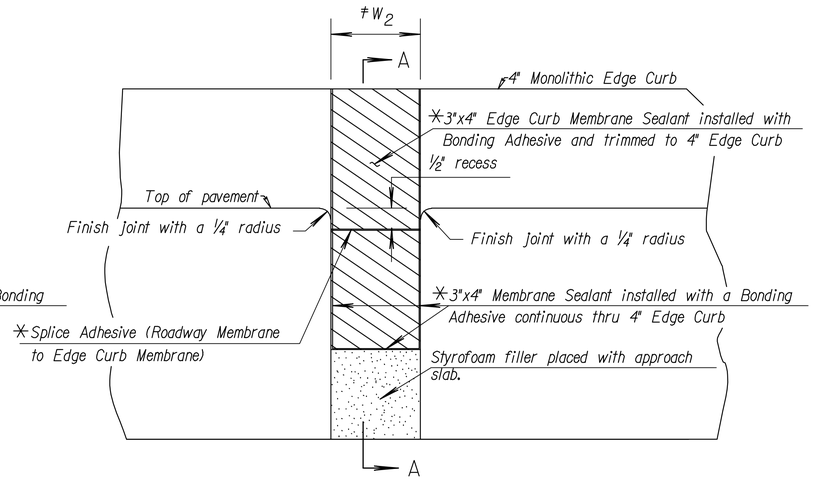

ELEVATION EXPANSION JT.

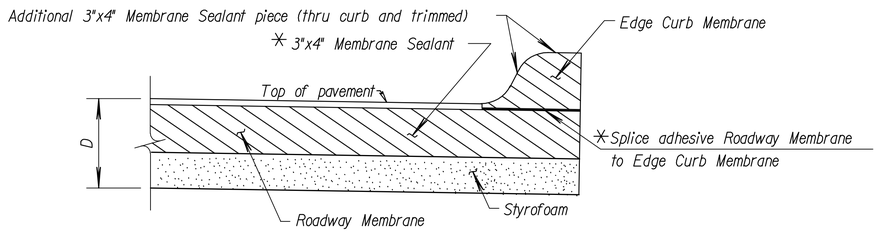

SECTION A-A

(See Std. Drawing RD711 for details of 4" Edge Curb.)

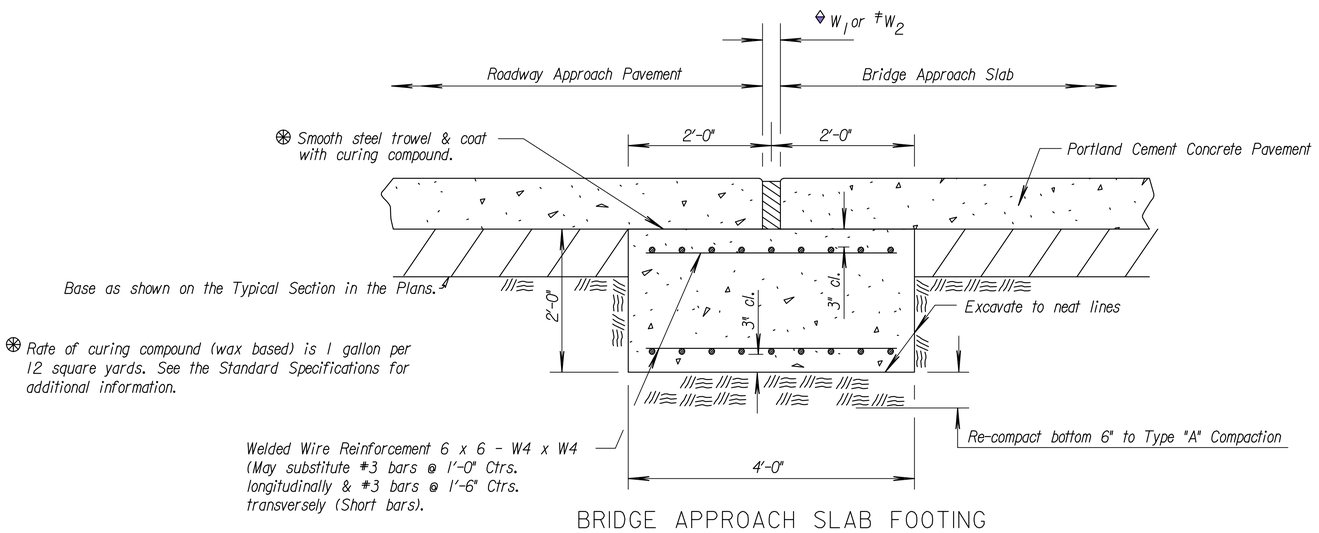

BRIDGE APPROACH SLAB FOOTING

GENERAL NOTES

EXPANSION/PRESSURE RELIEF JOINTS

See Concrete Bridge Approach Pavement standard drawings for location of expansion and pressure relief joints.

Form the joint opening prior to placement of the pavement approach. Remove the material used to form the joint after the pavement approach has been in place for a minimum of 6 days.

Clean and construct the joint only after the concrete in the approach slab has cured for a minimum of 7 days.

Thoroughly clean the joint by sandblasting and by high pressure air blast to remove all laitance and contaminants from the joint. When any joint is shaped by saw cutting in lieu of forming, blast the joint with water prior to sandblasting and air cleaning.

Accomplish sandblasting in two passes to clean each face of the joint (one pass for each face). Hold the nozzle 1 to 2 inches from the joint face at an angle to the joint face.

Remove any contaminants such as oil, curing compound, etc. by sandblasting to the satisfaction of the Engineer. Solvents, wire brushing, or grinding are not permitted.

Air blast the joint just prior to installing the Membrane Sealant. Equip the air compressor used to clean the joint with trap devices capable of providing moisture-free and oil-free air at a recommended pressure of 90 psi. Spot check the joint to verify any residual dust or dirt has been removed. The Engineer is required to inspect the joint immediately prior to installing the joint material.

✳See KDOT Standard Specifications for Membrane Sealant, Bonding Adhesive and Splice Adhesive. Do not allow traffic on the joint for a minimum of 3 hours unless otherwise directed by the Engineer.

Use splice materials and methods recommended by the Manufacturer.

All work and materials for the preparation, construction, and installation of the joint will be subsidiary to the concrete approach pavement.

BRIDGE APPROACH SLAB FOOTING

Pay for the Bridge Approach Slab Footing at the unit price bid per cubic yard for "Bridge Approach Slab Footing". This price will be full compensation for furnishing all materials and labor including Concrete Grade 4.0 (AE) Pavement, Reinforcing Steel (Gr. 60) (Epoxy Coated), excavation, Type "A" Compaction and materials used to prevent bonding of concrete. The Contractor may use Concrete Grade 4.0 (AE) or the mix used in the concrete pavement for the slab footing.

◆PRESSURE RELIEF JOINT WIDTH DETAILS (W_1)

¥Temperature (F°)	40°	50°	60°	70°	80°	90°	100°
Formed Concrete Opening Size	4.0"	3¾"	3½"	3¼"	3.0"	2¾"	2½"

¥Average Ambient Temperature over previous 24 hours.

≠EXPANSION JOINT WIDTH DETAILS (W_2)

See bridge construction layout sheet for details.

NO.	DATE	REVISIONS	BY	APP'D
9	10-16-13	Revised General Note	S.W.K.	J.O.B.
8	4-4-13	Rev. Joint Width Det. Table	S.W.K.	J.O.B.
7	7-10-09	Adjusted Expansion Joint table	S.W.K.	J.O.B.
6	5-13-09	Therm. width jt. & membrane sealant	S.W.K.	J.O.B.

KANSAS DEPARTMENT OF TRANSPORTATION

BRIDGE APPROACH SLAB DETAILS
EXPANSION/PRESSURE RELIEF JOINT/
BRIDGE APPROACH SLAB FOOTING

RD712

FHWA APPROVAL	9-4-14	APP'D. James O. Brewer	
DESIGNED	DETAILED	QUANTITIES	TRACED Bowser
DESIGN CK.	DETAIL CK.	QUAN.CK.	TRACE CK. King

KDOT Graphics Certified 09-16-2014

Sh. No. 43

KDOT Graphics Certified

J:\PROJECTS\2014\1401040290 - COW - 127TH E. 13TH TO 21ST\05-CIVIL\CAD\BRIDGE\1429RD712.DWG

PLOTTED: Wednesday, November 29, 2017 @ 02:50PM

STATE	PROJECT NO.	YEAR	SHEET NO.	TOTAL SHEETS
KANSAS	87 N–0615–01	2017	44	183

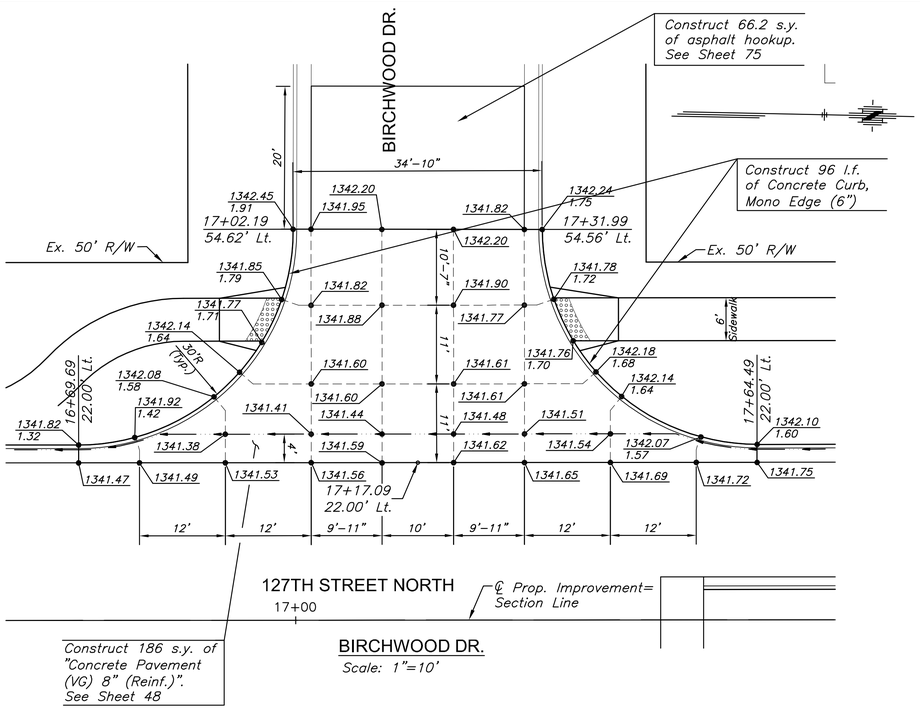

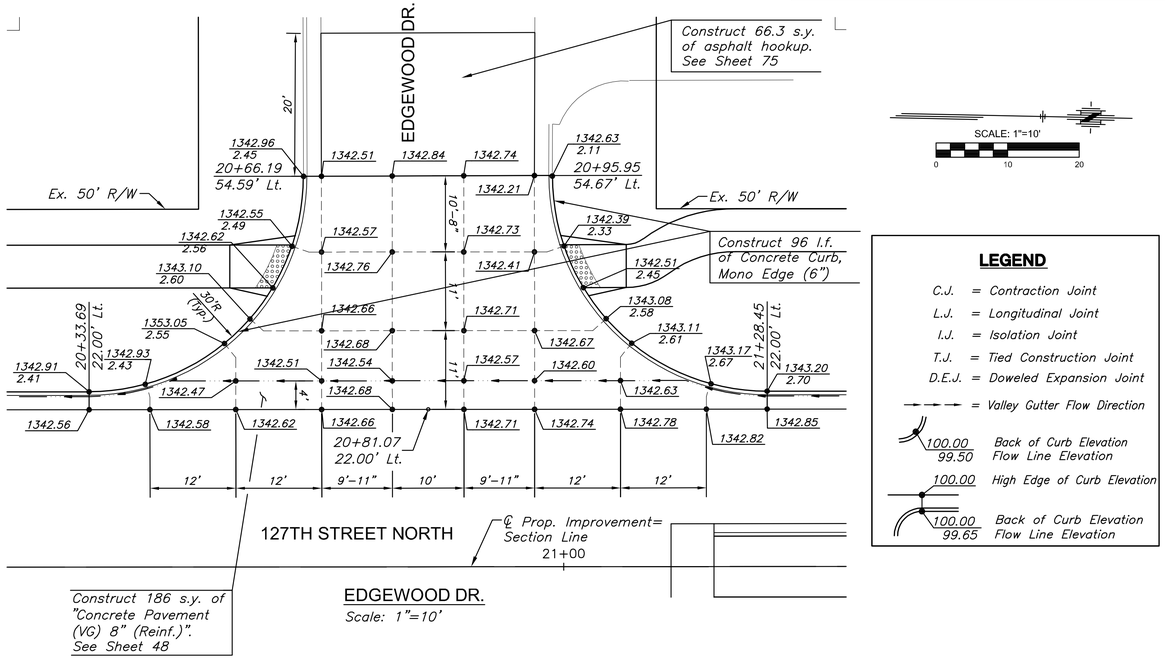

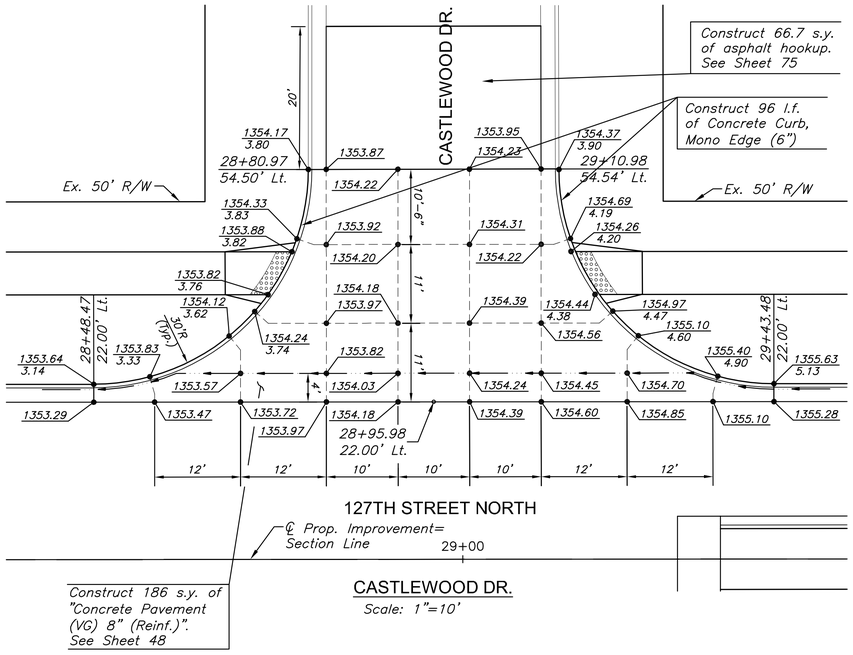

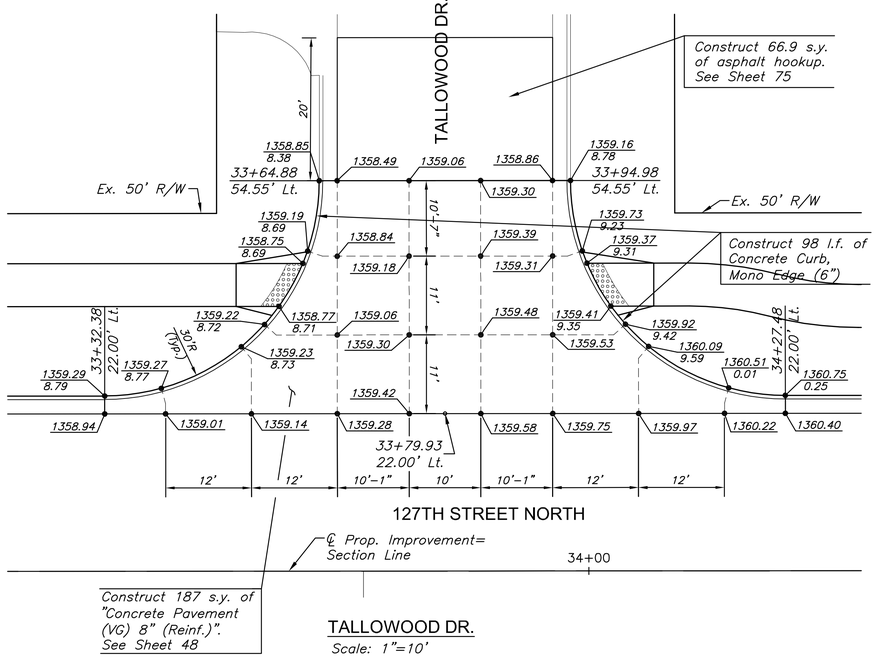

LEGEND

- C.J. = Contraction Joint
- L.J. = Longitudinal Joint
- I.J. = Isolation Joint
- T.J. = Tied Construction Joint
- D.E.J. = Doweled Expansion Joint
- = Valley Gutter Flow Direction
- 100.00 / 99.50 — Back of Curb Elevation / Flow Line Elevation
- 100.00 — High Edge of Curb Elevation
- 100.00 / 99.65 — Back of Curb Elevation / Flow Line Elevation

MKEC
Wichita, KS • 316-684-9600

STREET IMPROVEMENTS FOR

127TH STREET EAST

FROM 13TH STREET NORTH TO 21ST STREET NORTH

©2017
MKEC Engineering
All Rights Reserved
www.mkec.com
These drawings and their contents, including, but not limited to, all concepts, designs, & ideas are the exclusive property of MKEC Engineering (MKEC), and may not be used or reproduced in any way without the express consent of MKEC.

VALLEY GUTTER PAVING PLAN

PROJECT NO.	472-85158
DATE	11/29/17
SCALE	1"=10'

DESIGNED	DRAWN	CHECKED
JRA	WNJ	JRA

NO.	REVISION	DATE

SHEET NO.

44 OF 183

Sh. No. 44

J:\PROJECTS\2013\1401940299 - COW_127TH E 13TH TO 21ST\05-CIVIL\CAD\PAVT\4299ED01.DWG

PLOTTED: Wednesday, November 29, 2017 @ 02:51PM

STATE	PROJECT NO.	YEAR	SHEET NO.	TOTAL SHEETS
KANSAS	87 N–0615–01	2017	45	183

SCALE: 1"=10'
0 10 20

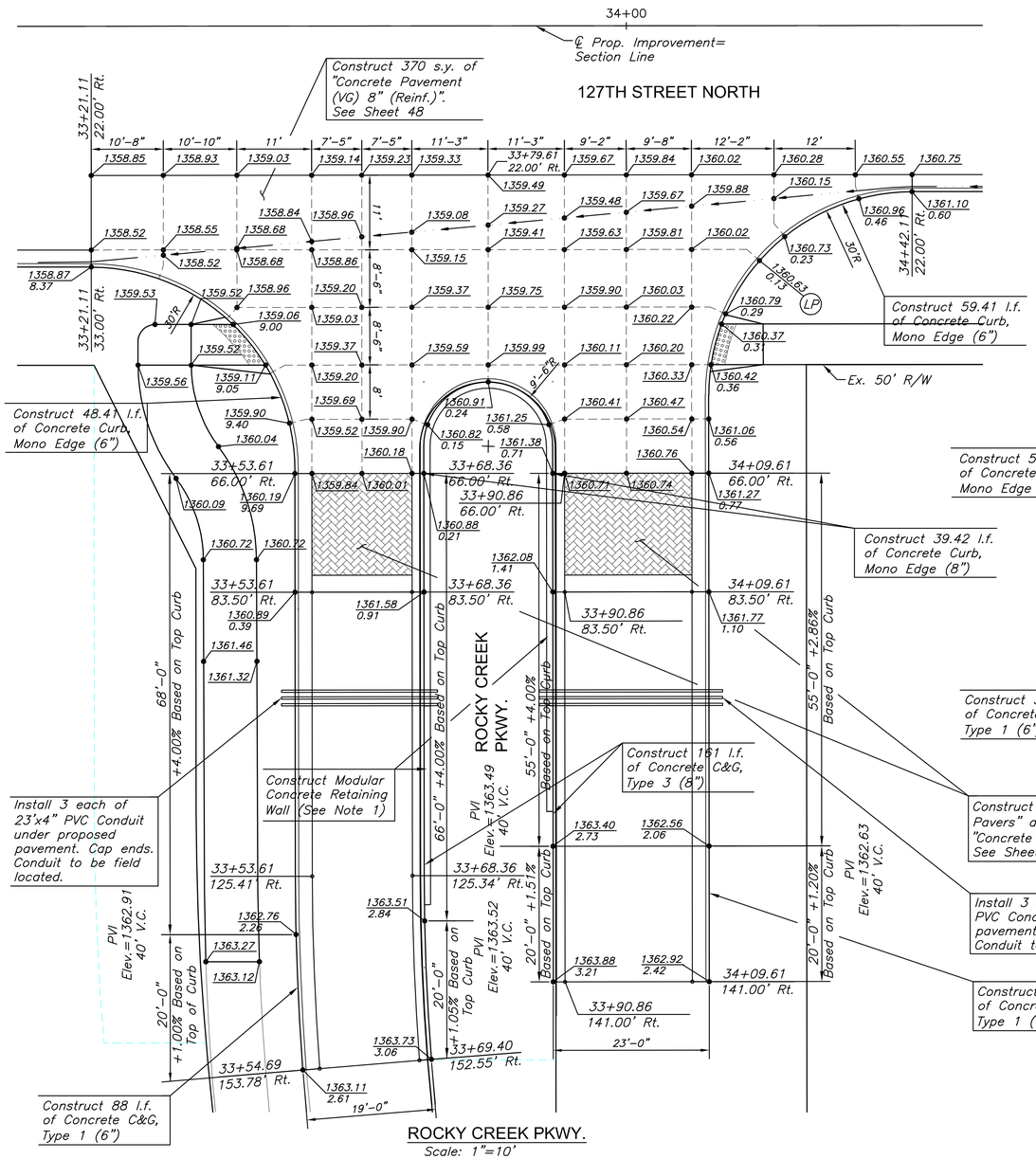

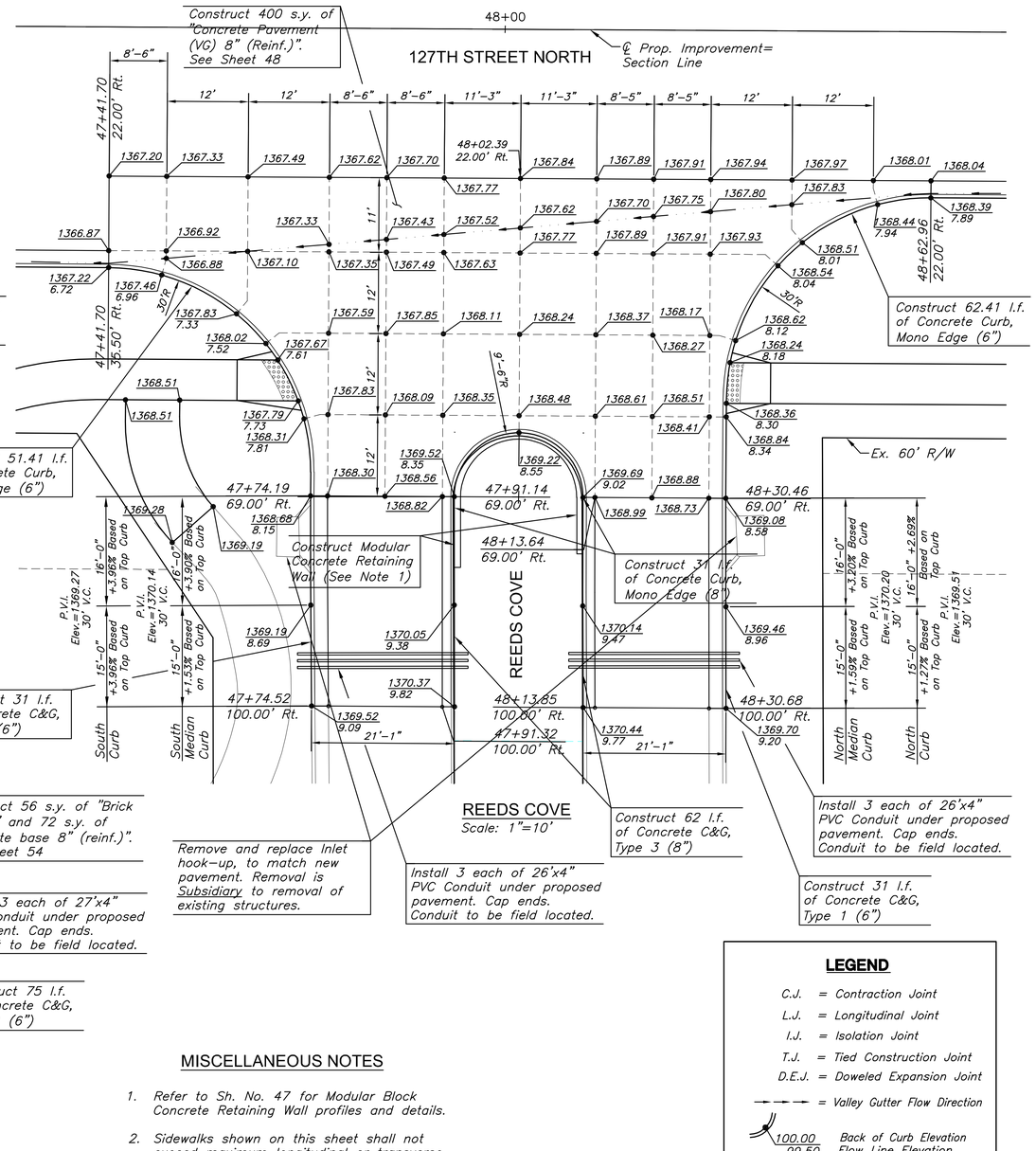

LEGEND

- C.J. = Contraction Joint
- L.J. = Longitudinal Joint
- I.J. = Isolation Joint
- T.J. = Tied Construction Joint
- D.E.J. = Doweled Expansion Joint
- = Valley Gutter Flow Direction
- 100.00 / 99.50 = Back of Curb Elevation / Flow Line Elevation
- 100.00 = High Edge of Curb Elevation
- 100.00 / 99.65 = Back of Curb Elevation / Flow Line Elevation

MISCELLANEOUS NOTES

1. Refer to Sh. No. 47 for Modular Block Concrete Retaining Wall profiles and details.
2. Sidewalks shown on this sheet shall not exceed maximum longitudinal or transverse slopes as defined by the most recent version of the ADA Accessibility Guidelines.

MKEC
Wichita, KS • 316-684-9600

STREET IMPROVEMENTS FOR

127TH STREET EAST

FROM 13TH STREET NORTH TO 21ST STREET NORTH

©2017
MKEC Engineering
All Rights Reserved
www.mkec.com
These drawings and their contents, including, but not limited to, all concepts, designs, & ideas are the exclusive property of MKEC Engineering (MKEC), and may not be used or reproduced in any way without the express consent of MKEC.

VALLEY GUTTER PAVING PLAN

PROJECT NO.	472-85158
DATE	11/29/17
SCALE	1"=10'

DESIGNED	DRAWN	CHECKED
JRA	WNJ	JRA

NO.	REVISION	DATE

SHEET NO.

45 OF 183

Sh. No. 45

J:\PROJECTS\2014\1401040299 - COW_127TH E 13TH TO 21ST\06-CIVIL\CAD\PAVI\1402990E02.DWG

PLOTTED: Wednesday, November 29, 2017 @ 02:51PM

STATE	PROJECT NO.	YEAR	SHEET NO.	TOTAL SHEETS
KANSAS	87 N–0615–01	2017	46	183

SCALE: 1"=10'
0 10 20

MKEC
Wichita, KS • 316-684-9600

127TH STREET EAST

STREET IMPROVEMENTS FOR
FROM 13TH STREET NORTH TO 21ST STREET NORTH

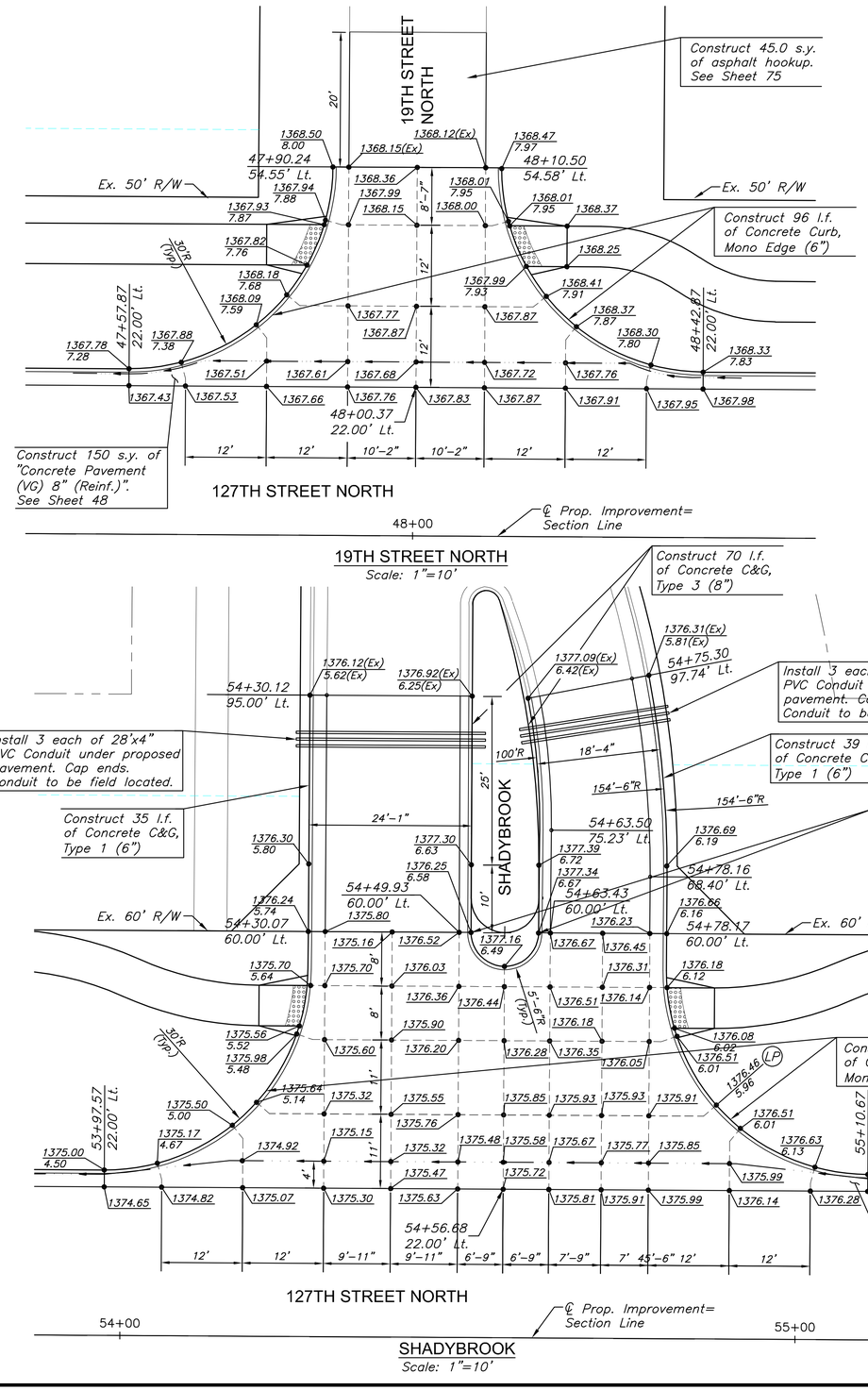

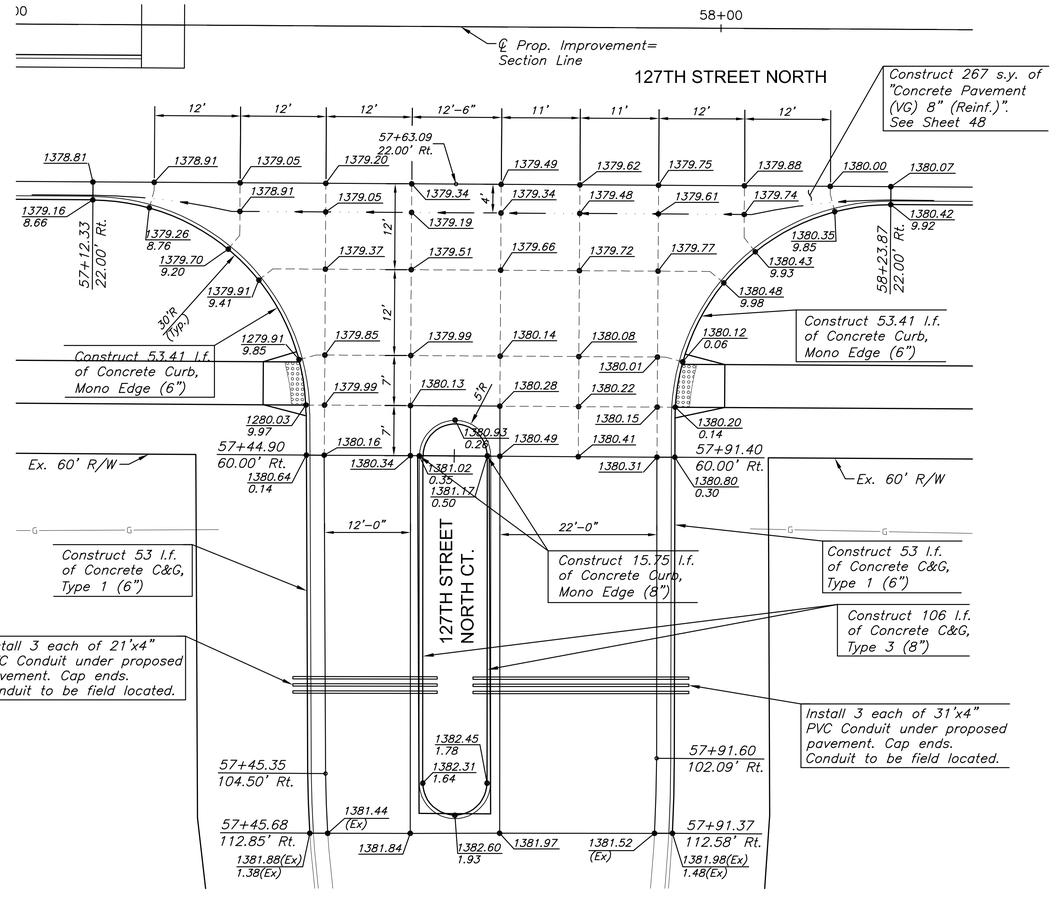

LEGEND

- C.J. = Contraction Joint
- L.J. = Longitudinal Joint
- I.J. = Isolation Joint
- T.J. = Tied Construction Joint
- D.E.J. = Doweled Expansion Joint
- = Valley Gutter Flow Direction
- 100.00 / 99.50 = Back of Curb Elevation / Flow Line Elevation
- 100.00 = High Edge of Curb Elevation
- 100.00 / 99.65 = Back of Curb Elevation / Flow Line Elevation

©2017
MKEC Engineering
All Rights Reserved
www.mkec.com
These drawings and their contents, including, but not limited to, all concepts, designs, & ideas are the exclusive property of MKEC Engineering (MKEC), and may not be used or reproduced in any way without the express consent of MKEC.

VALLEY GUTTER PAVING PLAN

PROJECT NO.	472-85158
DATE	11/29/17
SCALE	1"=10'

DESIGNED	DRAWN	CHECKED
JRA	WNJ	JRA

NO.	REVISION	DATE

SHEET NO.
46 OF 183

J:\PROJECTS\2014\140194090 - COW_127TH E 13TH TO 21ST\05-CIVIL\CAD\PAVI\1426ED03.DWG

PLOTTED: Wednesday, November 29, 2017 @ 02:52PM

STATE	PROJECT NO.	YEAR	SHEET NO.	TOTAL SHEETS
KANSAS	87 N-0615-01	2017	47	183

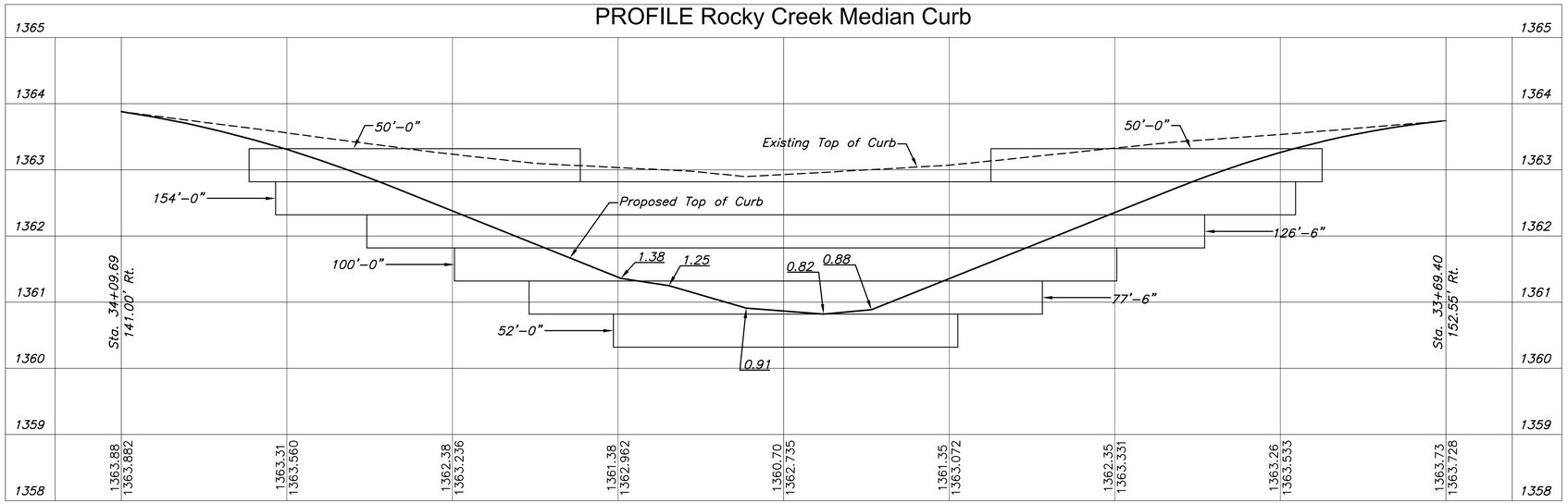

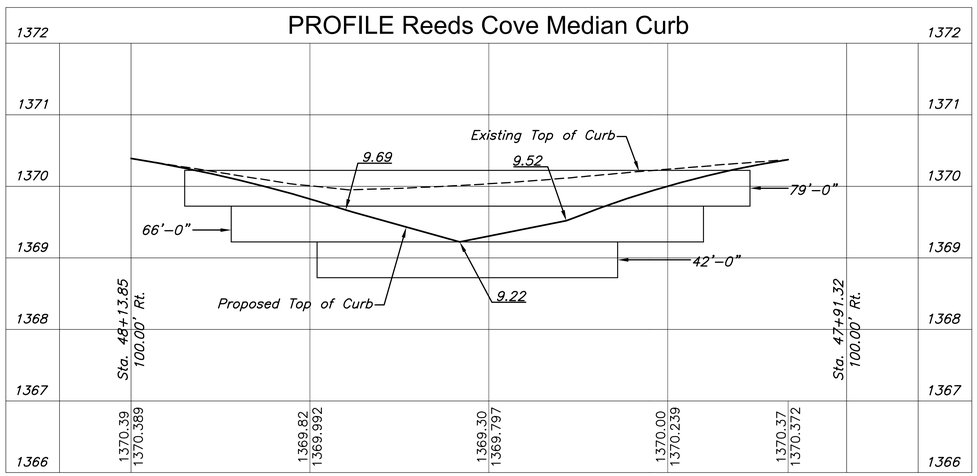

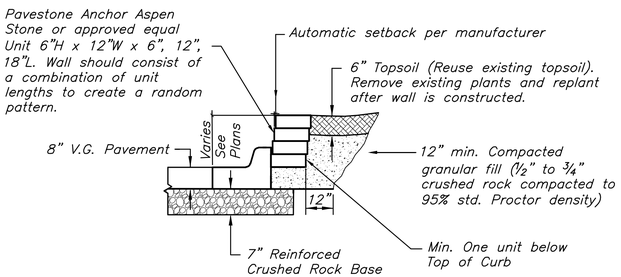

MODULAR BLOCK CONCRETE RETAINING WALL

"Retaining Wall, Modular Block" includes compacted granular material, top soil removal and replacement, plant removal and replacement, adjustment to lighting and irrigation appurtenances and pavestone units. Wall units shall be of the model and manufacture shown or approved equal. Wall unit dimensions, style and color shall be submitted to the Engineer for approval.

Note: Station Call-outs are to back of curb and gutter immediately in front of wall.

MKEC
Wichita, KS • 316-684-9600

STREET IMPROVEMENTS FOR

127TH STREET EAST

FROM 13TH STREET NORTH TO 21ST STREET NORTH

©2017
MKEC Engineering
All Rights Reserved
www.mkec.com
These drawings and their contents, including, but not limited to, all concepts, designs, & ideas are the exclusive property of MKEC Engineering (MKEC), and may not be used or reproduced in any way without the express consent of MKEC.

MODULAR BLOCK RETAINING WALL DETAILS

PROJECT NO.	472-85158
DATE	11/29/17
SCALE	1"=10'

DESIGNED	DRAWN	CHECKED
JRA	DMU	JRA

NO.	REVISION	DATE

SHEET NO.

47 OF 183

Sh. No. 47

J:\PROJECTS\2014\1401040290 - COV_127TH E. 13TH TO 21ST\05-CIVIL\CAD\PAV\1420EED02.DWG

PLOTTED: Wednesday, November 29, 2017 @ 02:52PM

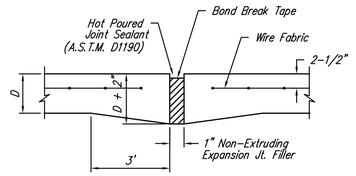

EXPANSION JOINT

NOTE: Extra Thickness to be Subsidiary to Price of Square Yards Pavement

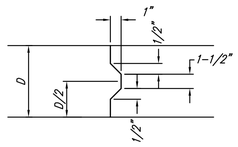

KEYWAY DETAIL

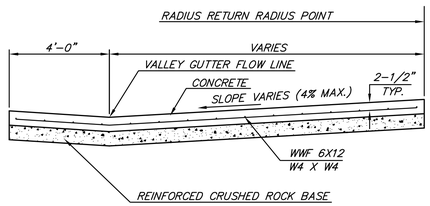

SECTION A-A

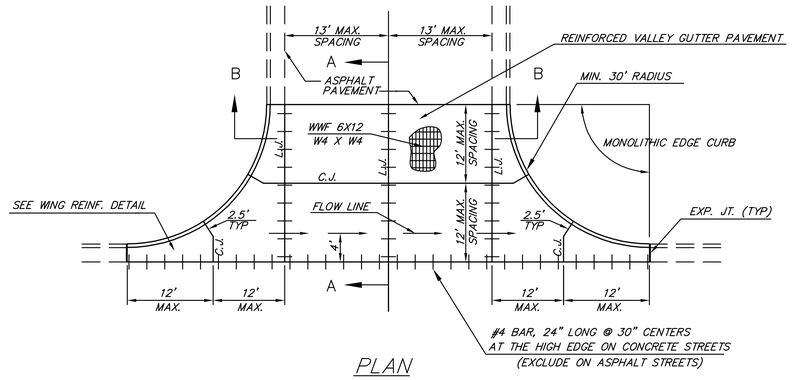

PLAN

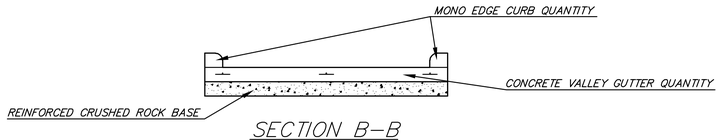

SECTION B-B

REINFORCED VALLEY GUTTER DETAIL

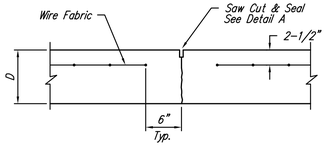

CONTRACTION JOINT DETAIL (C.J.)

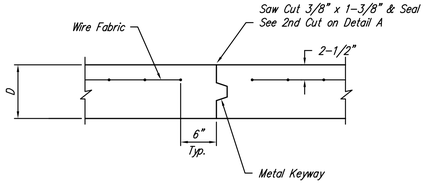

OPTIONAL CONTRACTION JOINT

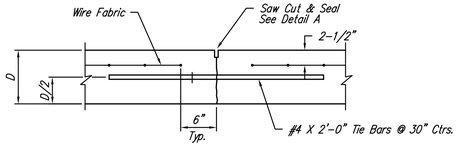

LONGITUDINAL JOINT DETAIL (L.J.)

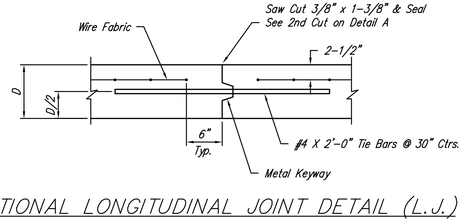

OPTIONAL LONGITUDINAL JOINT DETAIL (L.J.)

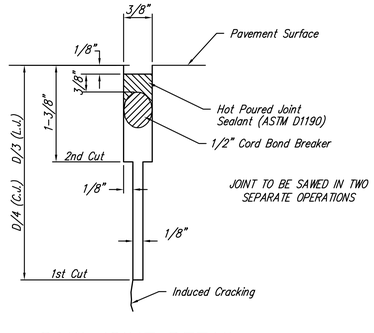

SAW JOINT DETAIL
(DETAIL A)

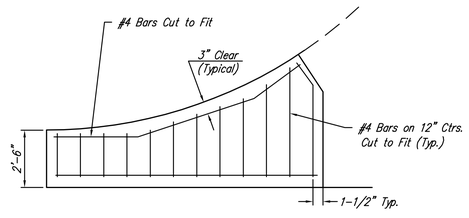

WING REINFORCING DETAIL

REVISED: NOVEMBER 2015

CITY OF WICHITA
PUBLIC WORKS & UTILITIES
ENGINEERING DIVISION

VALLEY GUTTER DETAILS

CITY ENGINEER
GARY JANZEN, P.E.

PROJECT NUMBER	OCA NUMBER	DATE
472-85158	707065	

CITY ENGINEER'S OFFICE
CITY HALL - SEVENTH FLOOR
455 NORTH MAIN STREET
WICHITA, KANSAS 67202-1620
(316) 268-4501

SHEET
48 OF 183

PV-109
Sh. No. 48

J:\PROJECTS\2014\401040290 - COW_127TH E 13TH TO 21ST\05-CIVIL\CAD\PAV\14290PV-109.DWG

PLOTTED: Wednesday, November 29, 2017 @ 02:52PM

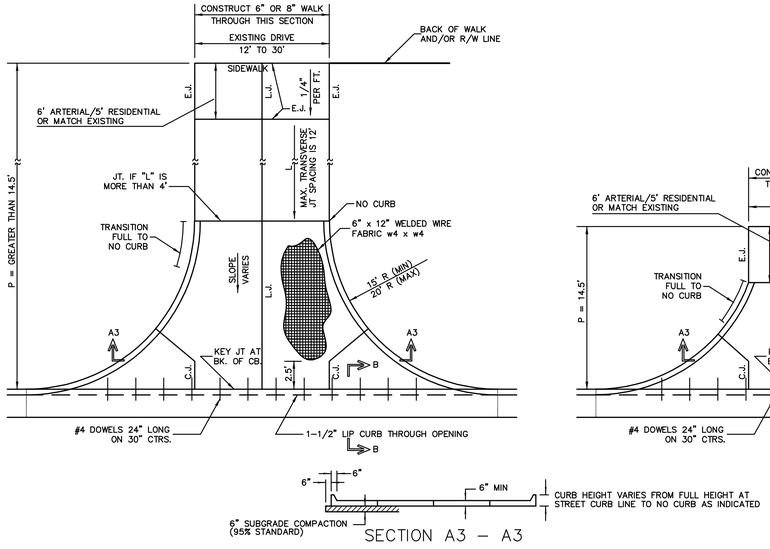

FULL RADIUS DRIVES (ARTERIAL/COLLECTOR DRIVEWAY)

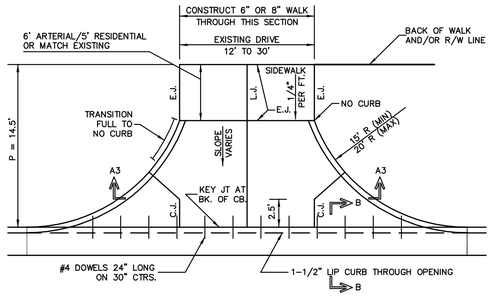

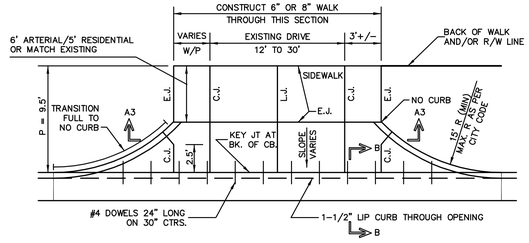

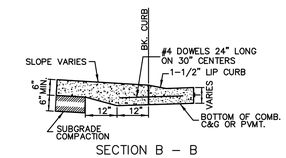

SECTION B – B

ALT. LONGITUDINAL CONSTRUCTION JOINT

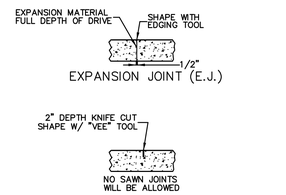

BACK OF CURB DETAIL

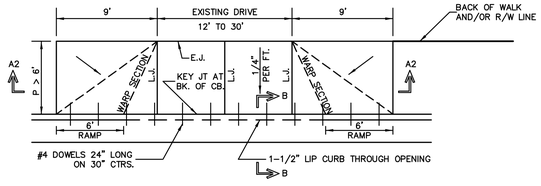

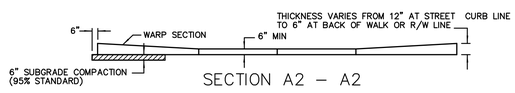

SECTION A2 – A2

FULL RAMP DRIVES (P = 4.0' & 6.5')

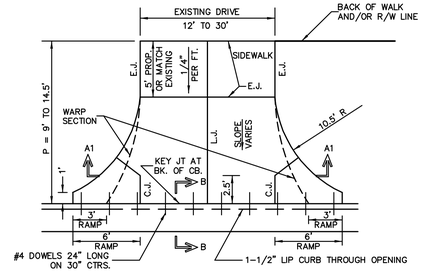

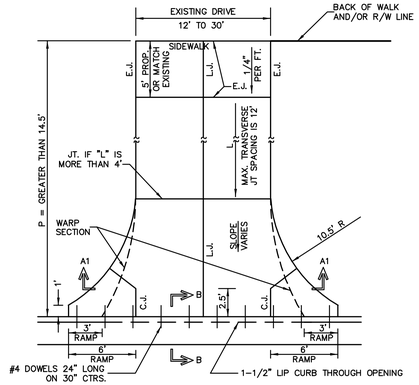

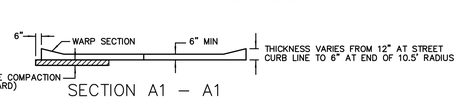

SECTION A1 – A1

RADIUS RAMP DRIVES (RESIDENTIAL DRIVEWAY)

GENERAL NOTES

1. DRIVEWAY CONSTRUCTION DETAILED ON THIS SHEET IS FOR USE WITH FULL HEIGHT STREET CURBS AND IN AREAS WITHOUT FULL WALK CONSTRUCTION IN THE PARKING. SEE OTHER DETAIL SHEETS FOR DRIVEWAY CONSTRUCTION WITH ROLL CURB AND/OR FULL WALK.
2. ONE LONGITUDINAL JOINT SHALL BE CONSTRUCTED ALONG THE CENTERLINE OF DRIVES HAVING A WIDTH DIMENSION OF 24' OR LESS. TWO LONGITUDINAL JOINTS SHALL BE CONSTRUCTED WITH EQUAL SPACINGS NOT TO EXCEED 10' FOR DRIVES WITH A WIDTH DIMENSION GREATER THAN 24'.
3. DRIVEWAY WIDTH DENOTED AS WIDTH ON THE DETAIL DRAWINGS SHALL BE A MINIMUM OF 12' AND A MAXIMUM OF 30'. THE MAXIMUM OPENING FOR RADIUS TYPE DRIVES WITH CURBS THROUGH THE RADIUS SHALL NOT EXCEED 52' AT THE STREET CURB LINE.
4. CONTRACTION JOINT SPACING IN THE DRIVEWAY WALK SECTION SHALL BE A MINIMUM OF 3' AND A MAXIMUM OF 6' AND ARE TO BE EQUALLY SPACED WITHIN THIS RANGE. WALK SECTION SHALL BE CONSTRUCTED TO THE SAME THICKNESS AS THE DRIVEWAY.
5. ADDITIONAL THICKNESS OF DRIVE AS INDICATED IN THE DRAWINGS WILL NOT BE PAID FOR DIRECTLY AND THIS COST SHALL BE INCLUDED IN THE UNIT PRICE BID FOR THE DRIVEWAY CONSTRUCTION.
6. ONE HALF INCH EXPANSION JOINTS SHALL BE INSTALLED WHEREVER DRIVE CONSTRUCTION ABUTS SIDEWALK. ONE HALF INCH EXPANSION JOINTS SHALL ALSO BE INSTALLED ALONG THE PROPERTY LINE AND/OR BACK OF WALK LINE WHEN DRIVE CONSTRUCTION ALONG THIS LINE ABUTS CONCRETE PARKING LOTS OR CONCRETE DRIVE EXTENSION.
7. DRIVEWAYS ONLY ON RESIDENTIAL PROPERTIES ONLY CAN BE CONSTRUCTED WITH 6" IN THICKNESS AND CAN BE WITHOUT REINFORCEMENT.
8. ALL DRIVEWAYS TO NONRESIDENTIAL PROPERTY SHALL BE A MINIMUM OF 8" IN THICKNESS AND SHALL HAVE REINFORCEMENT WITH 6"x12", W4xW4.

J:\PROJECTS\2014\1401940250 - COW_127TH E 13TH TO 21ST\05-CIVIL\CAD\PAV\1429GPV-126.DWG

REVISED: NOVEMBER 2015

CITY OF WICHITA
PUBLIC WORKS & UTILITIES ENGINEERING DIVISION

STANDARD DRIVE ENTRANCES FULL HEIGHT CURB

CITY ENGINEER
GARY JANZEN, P.E.

PROJECT NUMBER	OCA NUMBER	DATE
472-85158	707065	

CITY ENGINEER'S OFFICE
CITY HALL - SEVENTH FLOOR
455 NORTH MAIN STREET
WICHITA, KANSAS 67202-1620
(316) 268-4501

SHEET
49 OF 183

PV-126
Sh. No. 49

PLOTTED: Wednesday, November 29, 2017 @ 02:52PM

TYPE 1
(Arterial curb)

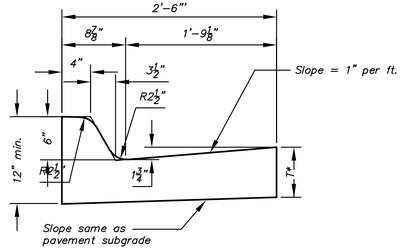

Combined Curb & Gutter (6")

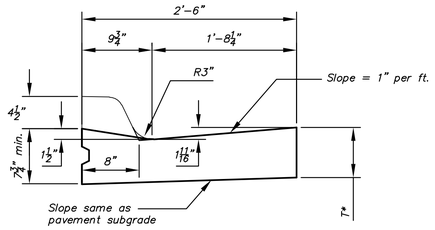

Combined Curb & Gutter (1 1/2")

TYPE 2
(Roll curb)

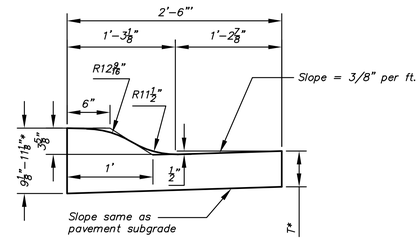

Combined Curb & Gutter (3 5/8")

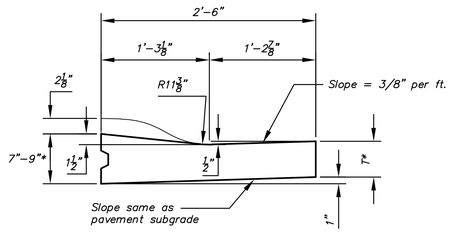

Combined Curb & Gutter (1 1/2")

TYPE 3
(Median curb)

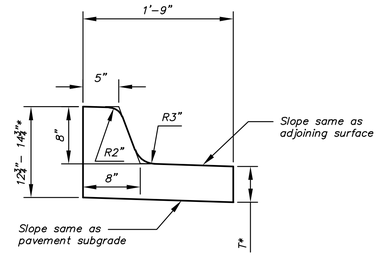

Combined Curb & Gutter (8")

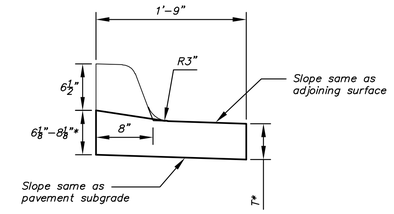

Combined Curb & Gutter (1 1/2")

TYPE 4
(Residential curb)

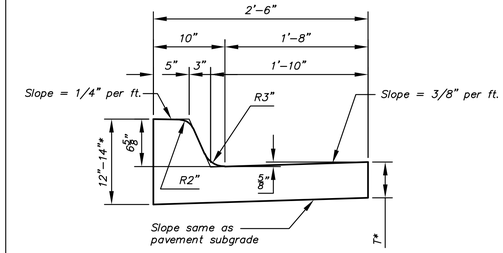

Combined Curb & Gutter (6 5/8")

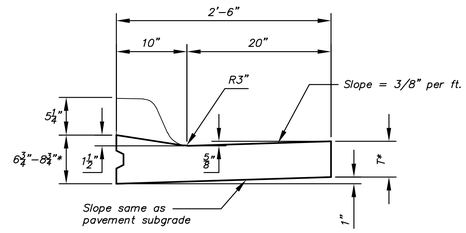

Combined Curb & Gutter (1 1/2")

T* = Thickness of curb to adjust with pavement thickness

GENERAL NOTES

1. Expansion (isolation) joints shall be constructed a maximum of 300' apart and at all PIs, PCs, cul-de-sac quadrants, and ends of returns.
2. Contraction joints shall be constructed a minimum of 12' apart.
3. Joint sealer shall be required at all joints on arterial and industrial streets and at intersections on residential streets.

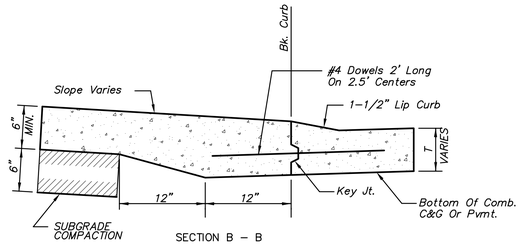

BACK OF CURB DETAIL

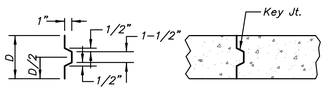

ALT. LONGITUDINAL CONSTRUCTION JOINT

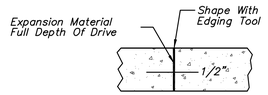

EXPANSION JOINT (E.J.)

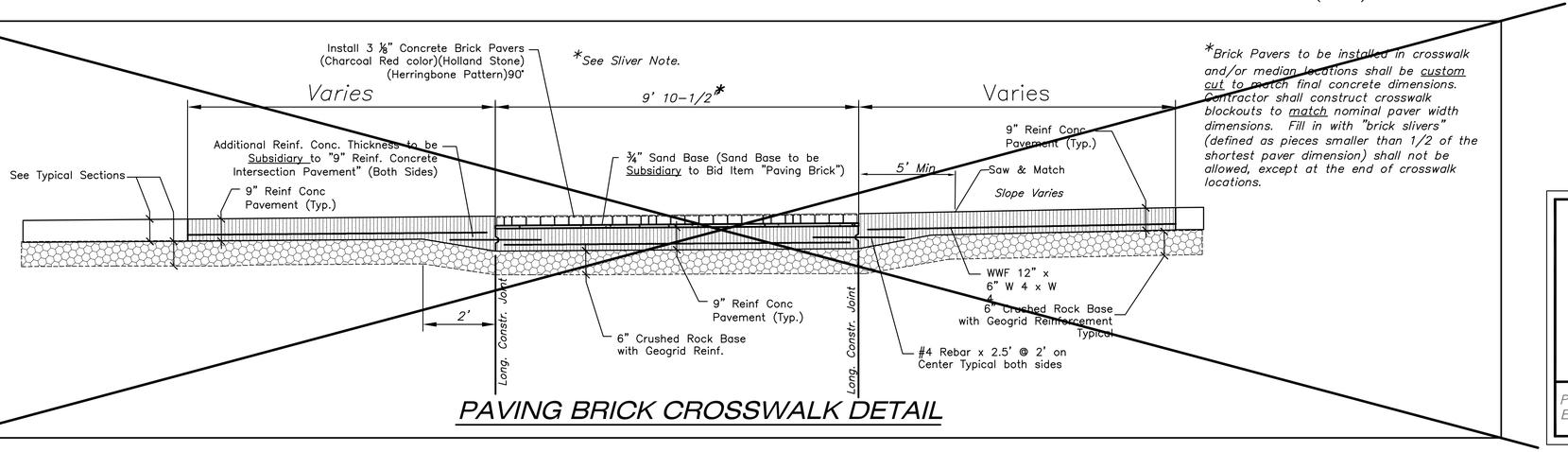

PAVING BRICK CROSSWALK DETAIL

*Brick Pavers to be installed in crosswalk and/or median locations shall be custom cut to match final concrete dimensions. Contractor shall construct crosswalk blockouts to match nominal paver width dimensions. Fill in with "brick slivers" (defined as pieces smaller than 1/2 of the shortest paver dimension) shall not be allowed, except at the end of crosswalk locations.

REVISED: OCTOBER 2015

CITY OF WICHITA
PUBLIC WORKS & UTILITIES ENGINEERING DIVISION

CURB & GUTTER & PAVING BRICK CROSSWALK DETAILS

CITY ENGINEER
GARY JANZEN, P.E.

PROJECT NUMBER	OCA NUMBER	DATE
472-85158	707065	

CITY ENGINEER'S OFFICE
CITY HALL - SEVENTH FLOOR
455 NORTH MAIN STREET
WICHITA, KANSAS 67202-1620
(316) 268-4501

SHEET
50 OF 183

PV-101
Sh. No. 50

J:\PROJECTS\2014\1401040299 - CDW - 12TH E. 13TH TO 21ST\05-CIVIL\CAD\PAV\1429DPV-101.DWG

PLOTTED: Wednesday, December 06, 2017 @ 01:40PM

STATE	PROJECT NO.	YEAR	SHEET NO.	TOTAL SHEETS
KANSAS	87 N-0615-01	2017	51	183

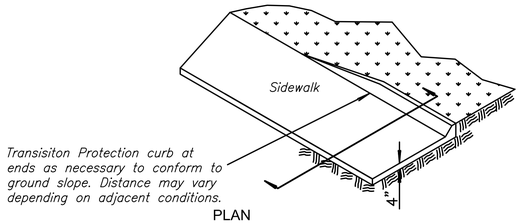

PLAN

Note:
1. Protection Curb shall be constructed at locations as directed by Engineer.
2. Protection Curb shall be constructed monolithically with sidewalk.
3. Protection Curb height will vary as shown on grading sheets. No distinction will be made between heights regarding payment.

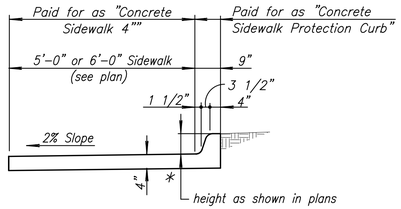

SECTION

* Transition at ends as shown on the plans.

CONCRETE SIDEWALK PROTECTION CURB

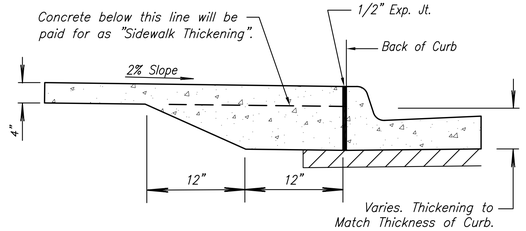

SIDEWALK THICKENING

Note: All Sidewalk at Back of Curb Shall Conform to this Detail

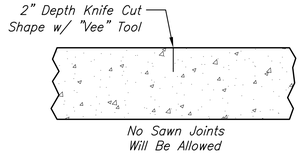

CONTRACTION JOINT (C.J.)

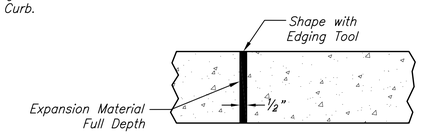

EXPANSION JOINT (E.J.)

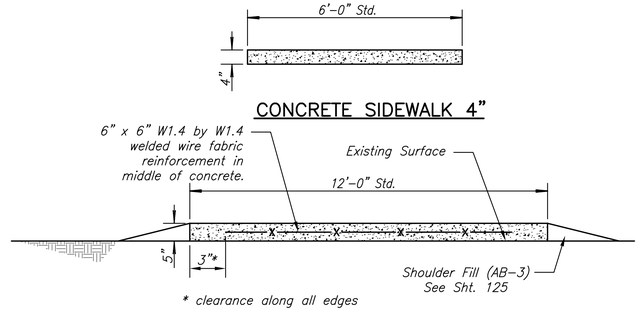

* clearance along all edges

CONCRETE SIDEWALK 4"

CONCRETE SIDEWALK 5"

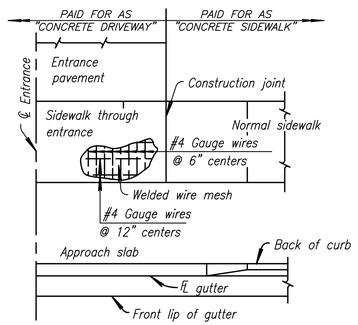

REINFORCEMENT DIAGRAM SIDEWALK THROUGH DRIVE APPROACH

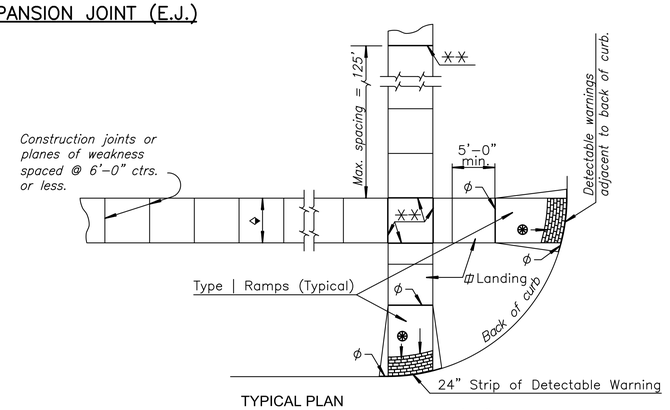

TYPICAL PLAN

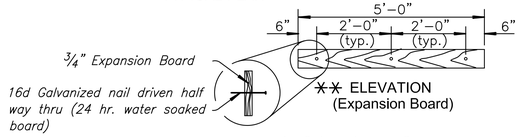

** ELEVATION (Expansion Board)

For other than 5'-0" (width) use 6" from the end and balanced (3'-0" max.) nail spacing.

ϕ Expansion Joint (3/4" board) placed at either back of curb line or at sidewalk back of curb line or at sidewalk line.

** Expansion joint (3/4" board) located as shown.

Variable width (5'-0" min.). Entrance walk to be same width as approach walk. Use sidewalk width of 4'-0" where existing conditions prohibit use of 5'-0".

New construction ramp slopes are 12: 1 or flatter. Desirable ramp slopes for existing sites are 12:1 or flatter. Where space limitations prohibit construction of a 12:1 slope on existing sites, use the following slopes:
8:1 or flatter for a maximum rise of 3 inches
10:1 or flatter for a maximum rise of 6 inches

Use a landing slope of 48: 1 or flatter. Landings are the same width as ramp and a minimum 5'-0" in length.

Use a counter slope of 20:1 or flatter at the base of sidewalk ramps. See curb and gutter detail sheet.

Detectable warning installation is typical and required on Sidewalk Ramps Type 1, Type 2, Type 3, median ramp crossings and other locations as shown in the plans. See ramp detail sheeet.

TYPICAL SIDEWALK PLAN AND DETAILS

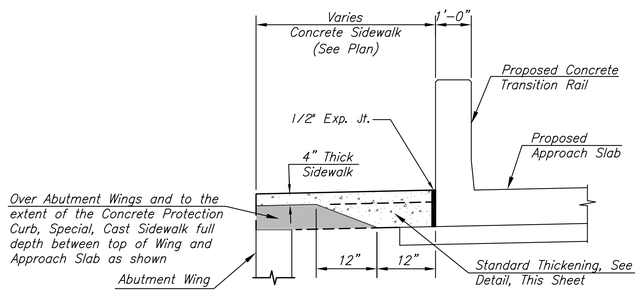

SIDEWALK AT BRIDGE APPROACH

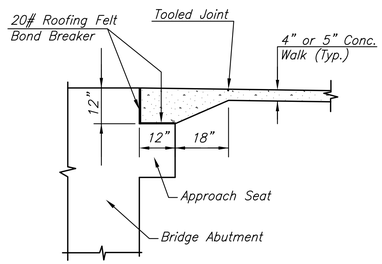

SIDEWALK AT BRIDGE ABUTMENT

©2017
MKEC Engineering
All Rights Reserved
www.mkec.com
These drawings and their contents, including, but not limited to, all concepts, designs, & ideas are the exclusive property of MKEC Engineering (MKEC), and may not be used or reproduced in any way without the express consent of MKEC.

SIDEWALK DETAILS

PROJECT NO.	472-85158
DATE	11/29/17
SCALE	NTS

DESIGNED	DRAWN	CHECKED
JRA	LES	JRA

NO.	REVISION	DATE

SHEET NO.

51 OF 183

MKEC
Wichita, KS • 316-684-9600

STREET IMPROVEMENTS FOR

127TH STREET EAST

FROM 13TH STREET NORTH TO 21ST STREET NORTH

J:\PROJECTS\2014\1940290 - COW_127TH E 13TH TO 21ST\05-CIVIL\CAD\PAV\14296ED04.DWG

PLOTTED: Wednesday, December 06, 2017 @ 01:40PM

STATE	PROJECT NO.	YEAR	SHEET NO.	TOTAL SHEETS
KANSAS	87 N-0615-01	2017	52	183

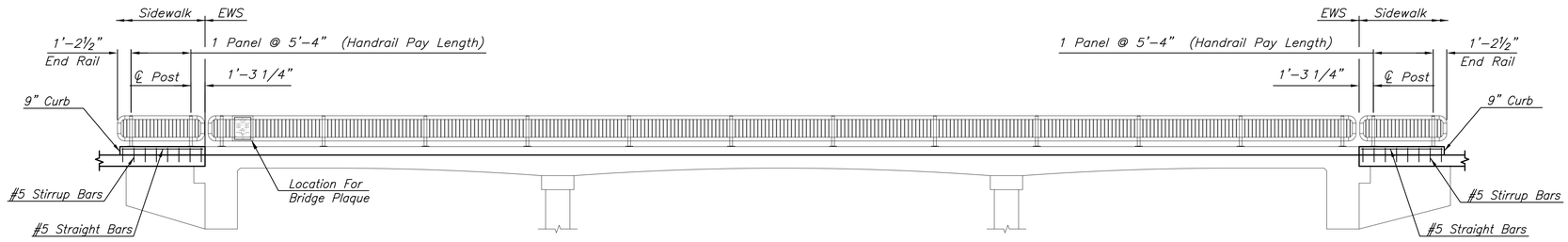

ELEVATION - HANDRAIL, PEDESTRIAN

(Shown and Dimensioned along Walkway Face of Handrail)
(West Edge Bridge Deck – Phase 2)

HANDRAIL NOTES

1. *The rail members shall conform to ASTM Designation A36 or equivalent.*
2. *Rail shall be fabricated in lengths to include a minimum of two and a maximum of three panels. Posts shall be set vertical. Shims may be used between concrete and base plates of posts.*
3. *All parts of handrail shall be painted. The primer coat shall conform to the inorganic zinc system. Surface preparation shall be in accordance with that for structural steel. The finish coat shall be in accordance with water-borne acrylic finish coat.*
4. *The Contractor shall submit color chart for approval by the City. The color shall be "black (carboline C900)".*
5. *All materials, equipment and labor necessary for the installation of the handrail shall be subsidiary to the bid item.*

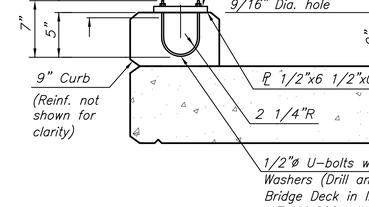

9" CURB DETAIL

("Concrete Sidewalk Protection Curb, Special")

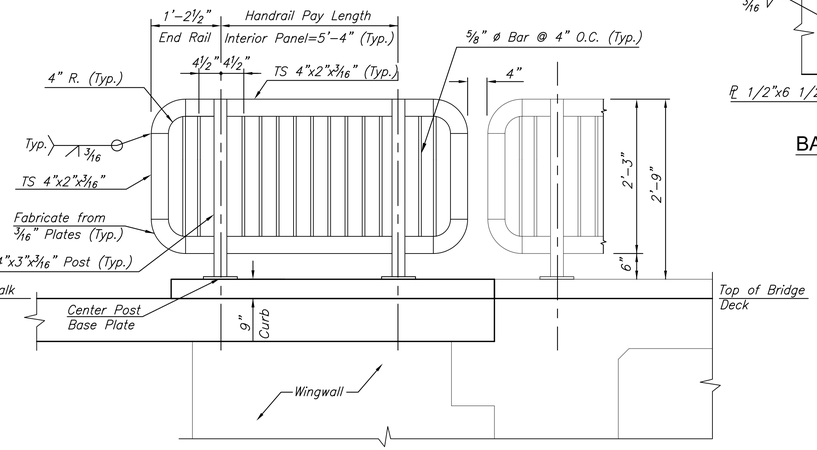

TYPICAL PANEL DETAIL

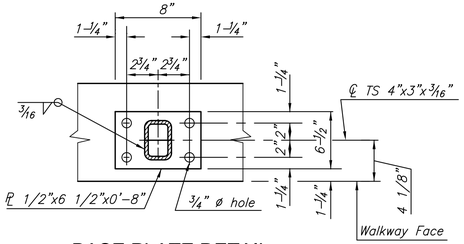

BASE PLATE DETAIL

FOR INFORMATION ONLY

BILL OF REINFORCING STEEL/QUANTITIES
(9" Curb)

Straight Bars			Bent Bars		
Size	No.	Length	Size	No.	Length
#5	4	7'-3"	#5	16	3'-7"
Reinforcing Steel (Gr. 60)			90 Lbs.		
Concrete (Gr. 4.0)			0.4 Cu. Yds.		

**All materials, equipment, and labor necessary for the construction of the 9" curb shall be subsidiary to the bid item "Concrete Sidewalk Protection Curb (Special)".*

TYPICAL RAIL SECTION

NO SCALE

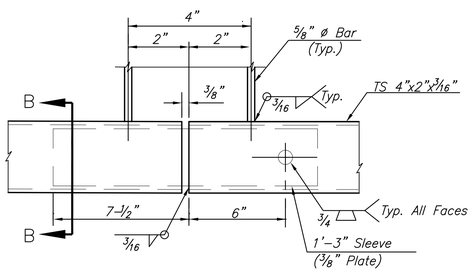

SLEEVE DETAIL

(Bottom Rail Shown, Top Rail Similar)

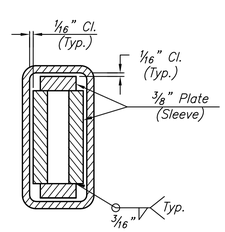

SECTION B-B

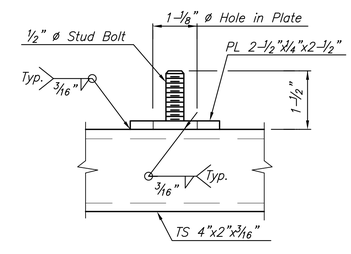

STUD BOLT DETAIL

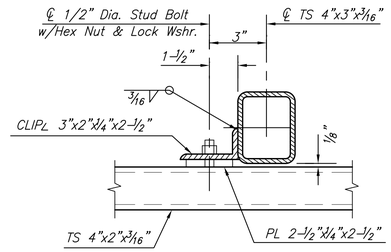

RAIL CONNECTION DETAIL

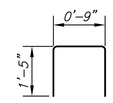

#5 STIRRUP BARS

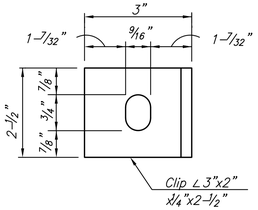

CLIP DETAIL

©2017
MKEC Engineering
All Rights Reserved
www.mkec.com
These drawings and their contents, including, but not limited to, all concepts, designs, & ideas are the exclusive property of MKEC Engineering (MKEC), and may not be used or reproduced in any way without the express consent of MKEC.

NO.	REVISION	DATE

SHEET NO.

52 OF 183

Sh. No. 52

MKEC
Wichita, KS • 316-684-9600

STREET IMPROVEMENTS FOR

127TH STREET EAST

FROM 13TH STREET NORTH TO 21ST STREET NORTH

HANDRAIL, PEDESTRIAN

PROJECT NO.	472-85158
DATE	11/29/17
SCALE	NTS

DESIGNED	DRAWN	CHECKED
KJS	RAM	KJS

J:\PROJECTS\2014\1401040290 - COW_127TH E 13TH TO 21ST\09-CIVIL\CAD\PAV\14290ED09.DWG

PLOTTED: Wednesday, November 29, 2017 @ 02:53PM

STANDARD WHEELCHAIR RAMP CONSTRUCTION DETAIL FOR STREETS WITH COMBINED CURB & GUTTER (TYPE A)

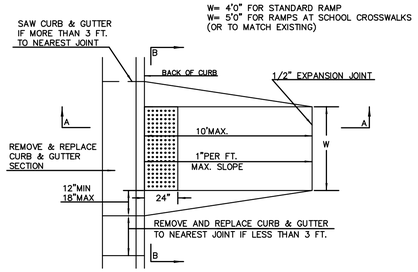

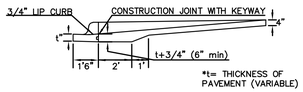

SECTION A–A

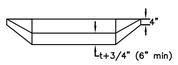

SECTION B–B

STANDARD WHEELCHAIR RAMP CONSTRUCTION DETAIL FOR CONCRETE STREETS WITH MONOLITHIC CURB (TYPE A)

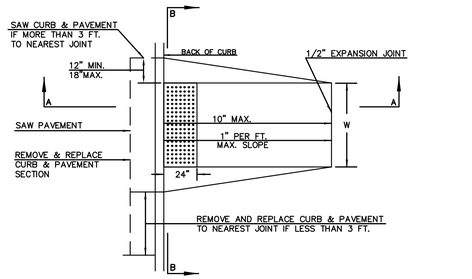

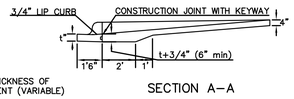

SECTION A–A

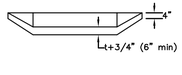

SECTION B–B

STANDARD WHEELCHAIR RAMP CONSTRUCTION DETAIL FOR STREETS WITH COMBINED CURB & GUTTER AND FULL WALK (TYPE B)

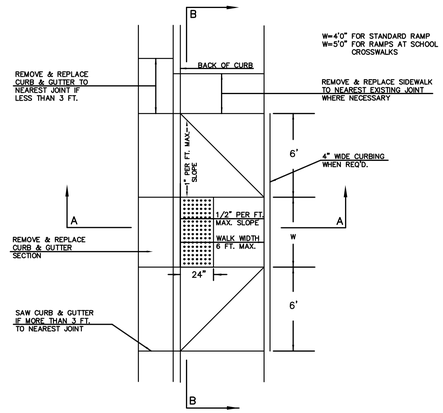

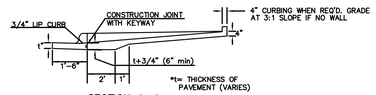

SECTION A–A

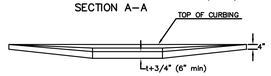

SECTION B–B

STANDARD WHEELCHAIR RAMP CONSTRUCTION DETAIL FOR STREETS WITH MONOLITHIC CURB AND FULL WALK (TYPE B)

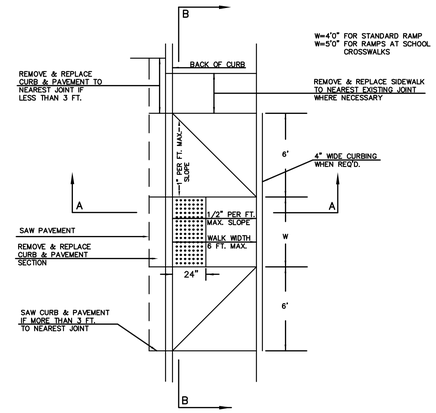

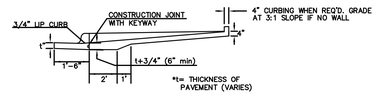

SECTION A–A

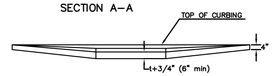

SECTION B–B

STANDARD WHEELCHAIR RAMP CONSTRUCTION DETAIL FOR STREET WITH COMBINED CURB AND GUTTER ON RADIUS WITH 6'± FROM BACK OF CURB TO PROPERTY CORNER (TYPE C)

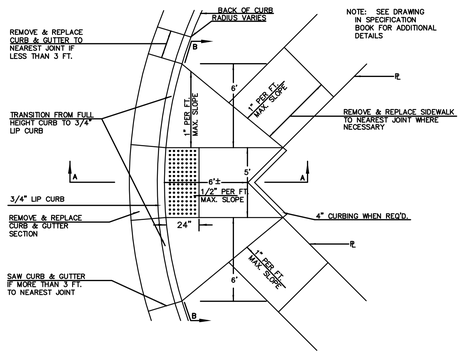

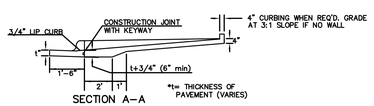

SECTION A–A

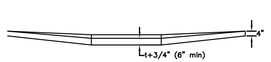

SECTION B–B

STANDARD WHEELCHAIR RAMP CONSTRUCTION DETAIL FOR STREET WITH MONOLITHIC CURB ON RADIUS WITH 6'± FROM BACK OF CURB TO PROPERTY CORNER (TYPE C)

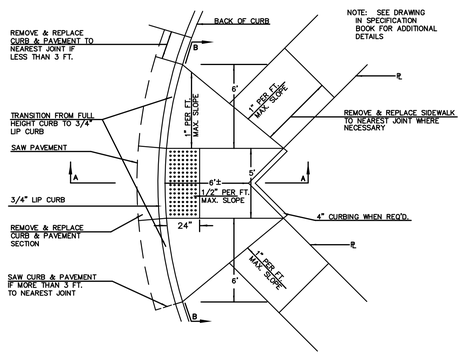

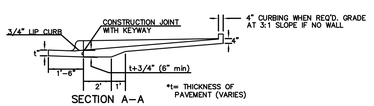

SECTION A–A

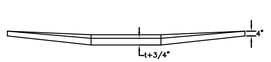

SECTION B–B

STANDARD WHEELCHAIR RAMP CONSTRUCTION DETAIL FOR STREETS WITH COMBINED CURB & GUTTER WITH ONE FULL SIDEWALK (TYPE D)

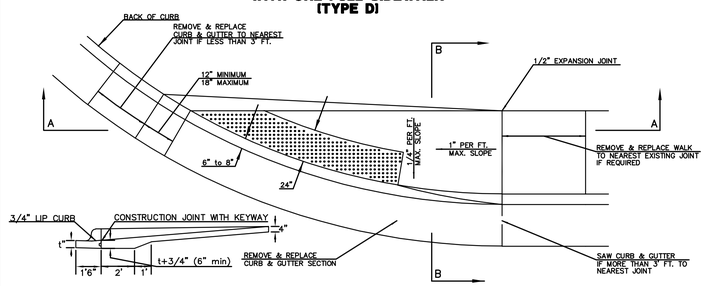

SECTION A–A

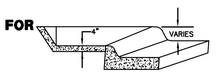

SECTION B–B

STANDARD WHEELCHAIR RAMP CONSTRUCTION DETAIL FOR STREETS WITH MONOLITHIC CURB WITH ONE FULL SIDEWALK (TYPE D)

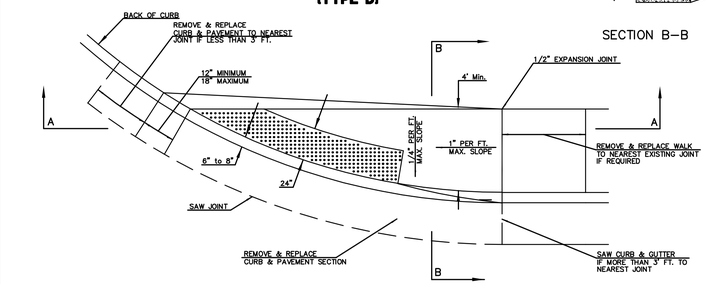

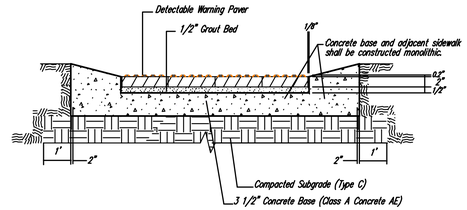

TYPICAL SECTION DETECTABLE WARNING PAVER
SECTION A–A

NOTE: HANOVER DETECTABLE WARNING PAVERS (OR AN APPROVED ALTERNATE) SHALL BE USED IN ALL WHEELCHAIR RAMPS. THE 11 3/4" "RED 15" PAVER SHALL BE USED IN ALL APPLICATIONS.
HANOVER ARCHITECTURAL PRODUCTS
240 BENDER ROAD
HANOVER, PA 17331
1-717-637-0500
www.hanoverpavers.com

DOME DETAIL

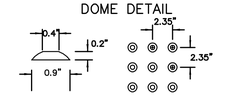

CITY OF WICHITA
PUBLIC WORKS & UTILITIES ENGINEERING DIVISION

WHEELCHAIR RAMP DETAILS WITH DETECTABLE WARNING

CITY ENGINEER
GARY JANZEN, P.E.

PROJECT NUMBER	OCA NUMBER	DATE
472-85158	707065	08/2013

CITY ENGINEER'S OFFICE
CITY HALL - SEVENTH FLOOR
455 NORTH MAIN STREET
WICHITA, KANSAS 67202-1620
(316) 268-4501

SHEET
53 OF 183

PV-110
Sh. No. 53

J:\PROJECTS\2014\1401040290 - COW_127TH E 13TH TO 21ST\05-CIVIL\CAD\PAV\1-4290PV-110.DWG

PLOTTED: Wednesday, November 29, 2017 @ 02:53PM

STATE	PROJECT NO.	YEAR	SHEET NO.	TOTAL SHEETS
KANSAS	87 N–0615–01	2017	54	183

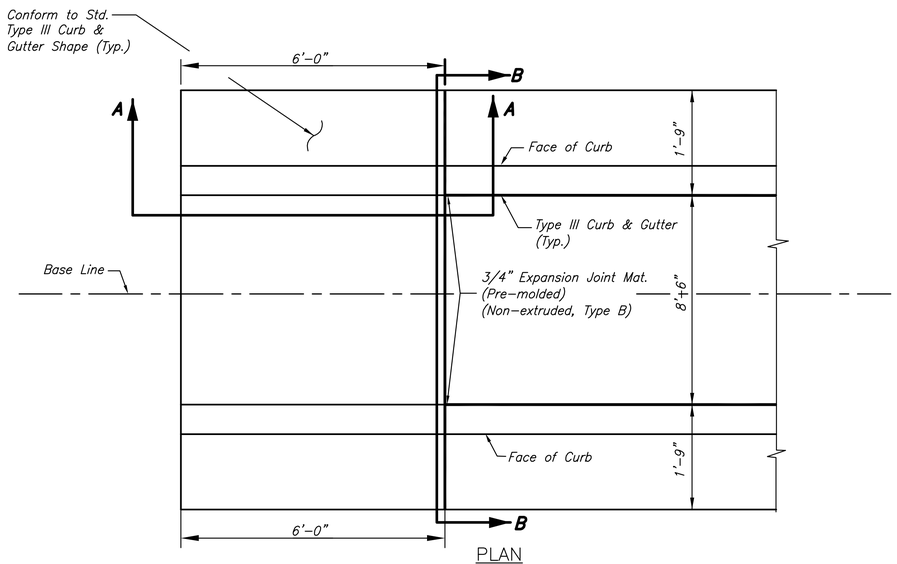

PLAN

CONCRETE MEDIAN NOSE

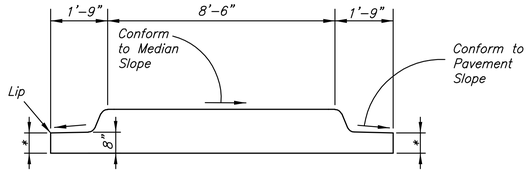

SECTION B–B

* match pavement thickness

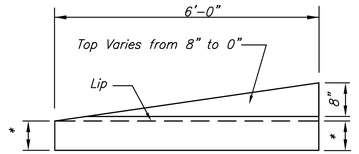

SECTION A–A

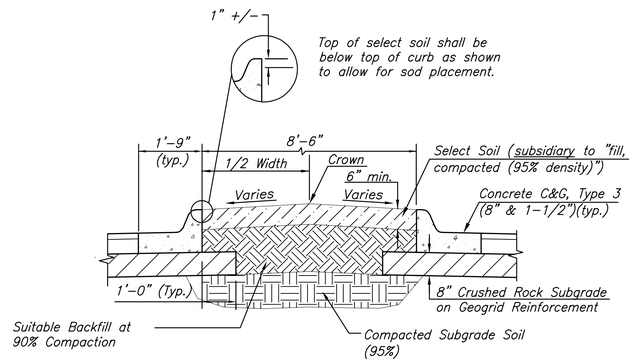

SELECT SOIL MEDIAN DETAIL

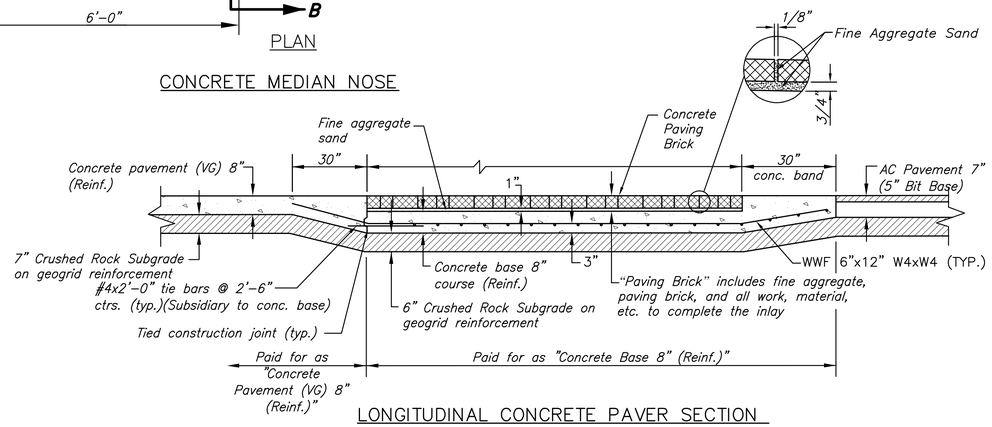

LONGITUDINAL CONCRETE PAVER SECTION

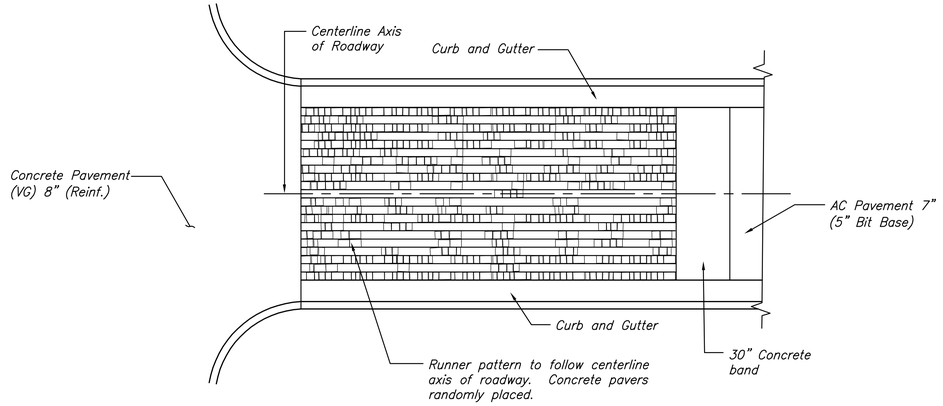

CONCRETE PAVER PLAN

CONCRETE PAVER SCHEDULE

MANUFACTURER	STYLE	COLOR	% MIX
PAVESTONE	PLAZA STONE (TYPE 1)	SANDSTONE	10%
PAVESTONE	PLAZA STONE (TYPE 1)	PEWTER–BLEND	10%
PAVESTONE	PLAZA STONE (TYPE 2)	PEWTER–BLEND	20%
PAVESTONE	PLAZA STONE (TYPE 1)	TERRA–COTTA	30%
PAVESTONE	PLAZA STONE (TYPE 1)	TERRA–COTTA/ CHARCOAL BLEND	15%
PAVESTONE	PLAZA STONE (TYPE 2)	TERRA–COTTA/ CHARCOAL BLEND	15%

Concrete Paver Notes:

1. Concrete unit pavers shall meet or exceed ASTM C 936. The style and color shall be as shown in the table above as manufactured by Pavestone, Inc., or equal as approved by the engineer. Payment shall be at the contract bid price per square yard for concrete brick pavers.

2. Additional form work for construction of the concrete paver will be subsidiary to the bid item "Brick Pavers".

3. Sand bedding shall meet the specifications for fine aggregate. An uncompacted sand laying course shall be spread evenly over the area to be paved and then screeded to a level of approximately 3/4" thickness. once screeded and leveled to the desired elevation, the sand laying course shall not be disturbed in any way.

4. The concrete pavers shall be installed in a runner pattern parallel to the axis of the roadway traffic flow. Blocks shall be placed with the chamfered side up, and join spaces kept uniform approximately 1/8" thick. The gaps at the edge of the paved surface shall be filled with paving blocks cut to fit. Cutting shall be accomplish to leave a clean edge toward the traffic surface, using a masonry saw. Whenever possible, no cuts should result with a paver less than one–third of its original dimension. Individual pavers are to be placed randomly by size and color in patter style mentioned above (refer to detail "Concrete Paver Plan").

5. Paving brick shall be vibrated to their final level in the sand laying course by two or three passes of vibrating compactor capable of 3000 to 5000 pounds compaction force with the surface clean and joints open.

6. After vibration, clean concrete sand shall be spread over the paving stone surface, allowed to dry, and vibrated into the joints with additional passes of the plate vibrator so as to completely fill the joints. A light coating of sand shall be swept over the completed surface and left to weather in.

7. Protect installed pavers from damage and defacement from adjacent asphalt pavement operations. Paver units affected by asphalt pavement operations shall be replaced at no cost to owner.

8. Existing paver units shall be removed and delivered to the City at 1801 S. McLean. Cost shall be subsidiary to "Transportation of Salvaged Materials". All pavers installed on the project shall be new.

MKEC
Wichita, KS • 316-684-9600

STREET IMPROVEMENTS FOR

127TH STREET EAST

FROM 13TH STREET NORTH TO 21ST STREET NORTH

©2017
MKEC Engineering
All Rights Reserved
www.mkec.com
These drawings and their contents, including, but not limited to, all concepts, designs, & ideas are the exclusive property of MKEC Engineering (MKEC) and may not be used or reproduced in any way without the express consent of MKEC.

MEDIAN & BRICK PAVER DETAILS

PROJECT NO.	472-85158
DATE	11/29/17
SCALE	NTS

DESIGNED	DRAWN	CHECKED
JRA	LES	JRA

NO.	REVISION	DATE

SHEET NO.

54 OF 183

Sh. No. 54

J:\PROJECTS\2014\1401940299 - COW_127TH E 13TH TO 21ST\05-CIVIL\CAD\PAVI\1429ED05.DWG

PLOTTED: Wednesday, November 29, 2017 @ 02:54PM

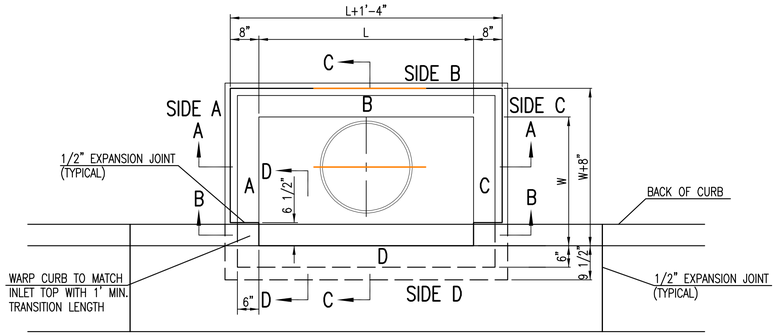

TOP VIEW

BAR SCHEDULE		
INLET OPENING	B1 BARS	SPACING
5'-0"	#4	4"
10'-0"	#6	3.5"

PRECAST CURB INLET WIDTHS				
W	PRE-CAST TOP SIZE			PIPE DIA.**
	WIDTH	LENGTH	TOP	
3'-0"	W+8"	L+1'-4"	7 1/2"	21" & SMALLER
4'-0"	W+8"	L+1'-4"	7 1/2"	24" & 30"
5'-0"	W+8"	L+1'-4"	7 1/2"	36" & 42"
6'-0"	W+8"	L+1'-4"	7 1/2"	48" & 54"
7'-0"	W+8"	L+1'-4"	7 1/2"	60" & 66"

** FOR PIPES PERPENDICULAR TO INLET WALL

GENERAL NOTES

1. CONCRETE TOPS TO BE INSTALLED ON THIN MORTAR CUSHION TO INSURE FULL SUPPORT ALONG BRICK. CONCRETE TOPS MAY BE CAST IN PLACE OR PRECAST. CONCRETE USED FOR INLET CONSTRUCTION SHALL CONFORM TO CITY OF WICHITA SPECIFICATIONS FOR CONCRETE PAVEMENT MIX.
2. CONTRACTOR SHALL HAVE THE OPTION OF CONSTRUCTING 8" BRICK MASONRY WALLS BETWEEN THE CONCRETE INLET BASE AND TOP OF THIS INLET WHEN W=5'-0" AND H=7'-0" OR LESS.
3. INLET INVERT SHALL BE SHAPED WITH 8 SACK SAND MIX CONCRETE TO CREATE FLOW CHANNELS AND TO INCREASE HYDRAULIC EFFICIENCY SUCH THAT THE INLET WILL BE SELF CLEANING BETWEEN ALL INLET AND/OR OUTLET PIPES.
4. THE ENDS OF ALL PIPES INSTALLED IN INLETS SHALL BE CUT OFF FLUSH WITH THE INSIDE FACE OF THE INLET WALL.
5. INLET FRAME AND COVER TO BE DEETER #2014, EJIW #1936 Z4, OR APPROVED EQUAL, SEE SW-303.
6. CONTRACTOR SHALL REMOVE LIFTING HOOKS AFTER INSTALLATION. RECESSES IN INLET WALL SHALL BE GROUTED FLUSH TO THE INLET WALL WITH HYDRAULIC CEMENT AFTER THE INLET IS IN PLACE. LIFTING HOLES THRU THE INLET WALL WILL NOT BE ACCEPTED.

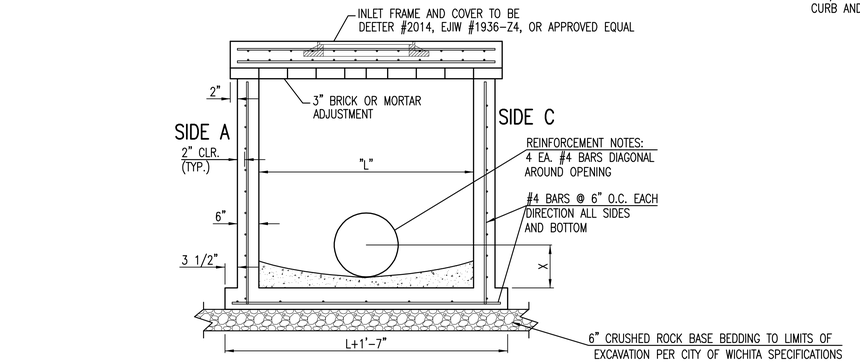

SECTION "A-A"

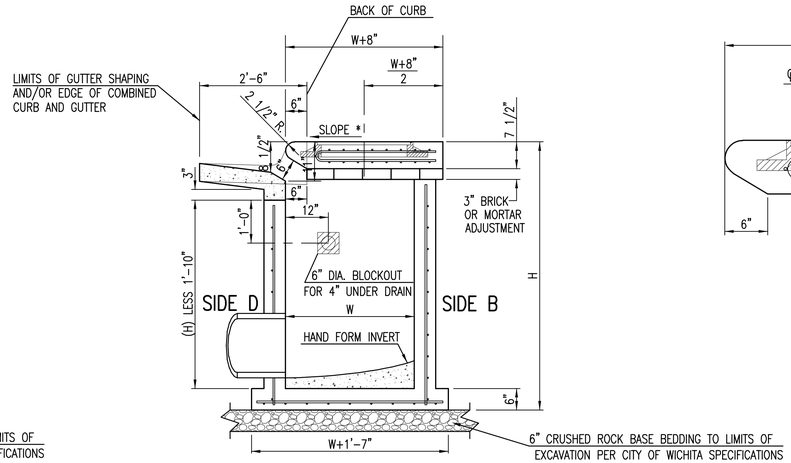

SECTION "C-C"

NOTES:
* SLOPE OF INLET TOP TO MATCH SIDEWALK OR PARKING SLOPES WITHIN LIMITS INDICATED.

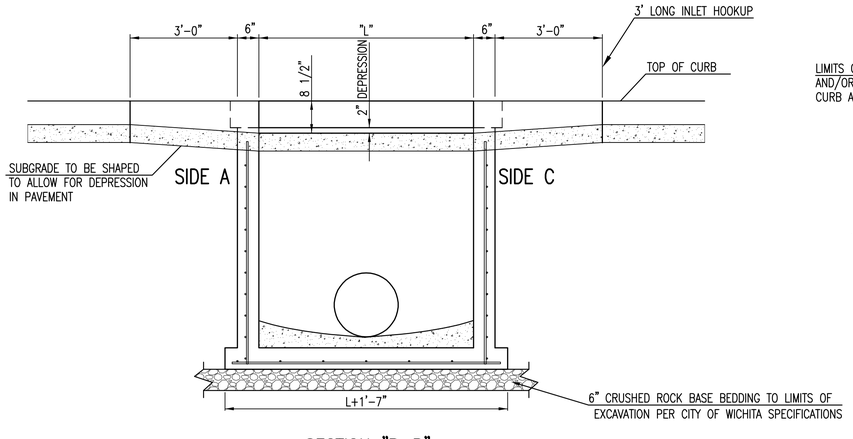

SECTION "B-B"

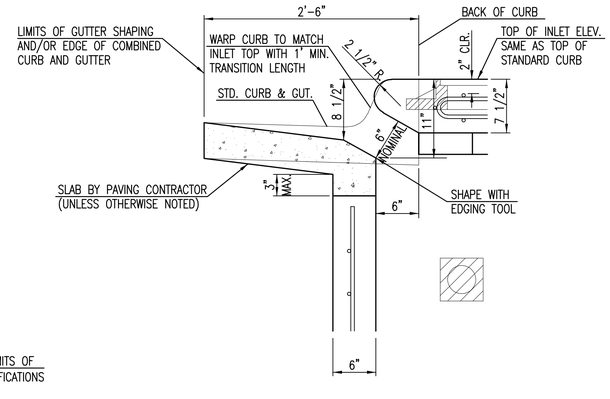

SECTION "D-D"

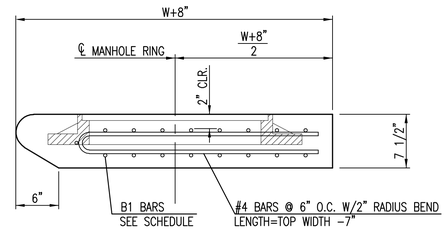

REVISED: MARCH 2015

CITY OF WICHITA
PUBLIC WORKS & UTILITIES
ENGINEERING DIVISION

STANDARD TYPE 1
CURB INLET
5'-0" OR 10'-0" OPENING

CITY ENGINEER
GARY JANZEN, P.E.

PROJECT NUMBER	OCA NUMBER	DATE
472-85158	707065	11/29/17

CITY ENGINEER'S OFFICE
CITY HALL - SEVENTH FLOOR
455 NORTH MAIN STREET
WICHITA, KANSAS 67202-1620
(316) 268-4501

SHEET
55 OF 183

SW-101

Sh. No. 55

J:\PROJECTS\2014\1401040290 - COW_127TH E 13TH TO 21ST\05-CIVIL\CAD\SWS\1429SW-101.DWG

PLOTTED: Wednesday, November 29, 2017 @ 02:54PM

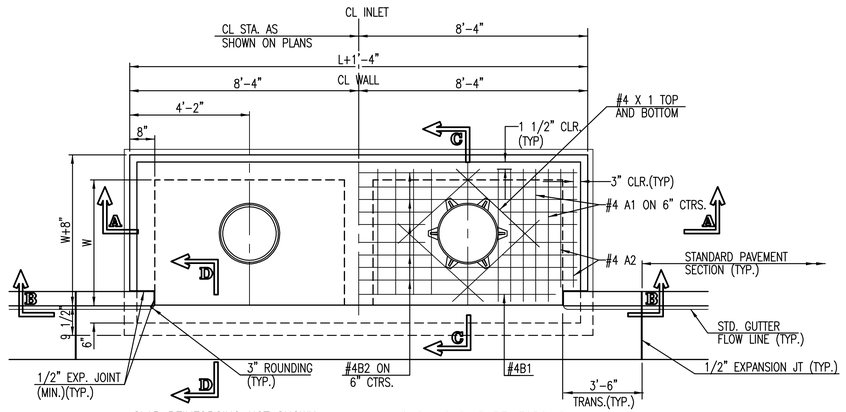

SLAB REINFORCING NOT SHOWN SHOWING SLAB REINFORCING

PLAN

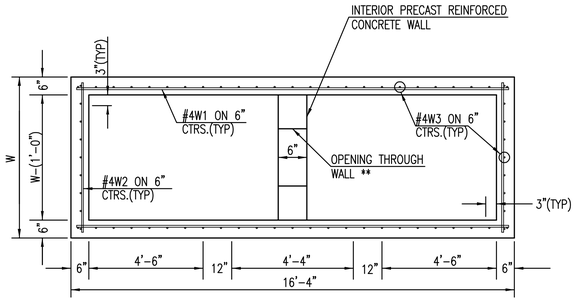

SECTION B-B

PRECAST CURB INLET WIDTHS				
W	PRE-CAST TOP SIZE			PIPE DIA.***
	WIDTH	LENGTH	TOP	
3'-0"	W+8"	L+1'-4"	7 1/2"	21" & SMALLER
4'-0"	W+8"	L+1'-4"	7 1/2"	24" & 30"
5'-0"	W+8"	L+1'-4"	7 1/2"	36" & 42"
6'-0"	W+8"	L+1'-4"	7 1/2"	48" & 54"
7'-0"	W+8"	L+1'-4"	7 1/2"	60" & 66"

*** FOR PIPES PERPENDICULAR TO INLET WALL

GENERAL NOTES

1. CONCRETE TOPS TO BE INSTALLED ON THIN MORTAR CUSHION TO INSURE FULL SUPPORT ALONG BRICK. CONCRETE TOPS MAY BE CAST IN PLACE OR PRECAST. CONCRETE USED FOR INLET CONSTRUCTION SHALL CONFORM TO CITY OF WICHITA SPECIFICATIONS FOR CONCRETE PAVEMENT MIX.
2. CONTRACTOR SHALL HAVE THE OPTION OF CONSTRUCTING 8" BRICK MASONRY WALLS BETWEEN THE CONCRETE INLET BASE AND TOP OF THIS INLET WHEN W=5'-0" AND H=7'-0" OR LESS.
3. INLET INVERT SHALL BE SHAPED WITH 8 SACK SAND MIX CONCRETE TO CREATE FLOW CHANNELS AND TO INCREASE HYDRAULIC EFFICIENCY SUCH THAT THE INLET WILL BE SELF CLEANING BETWEEN ALL INLET AND/OR OUTLET PIPES.
4. THE ENDS OF ALL PIPES INSTALLED IN INLETS SHALL BE CUT OFF FLUSH WITH THE INSIDE FACE OF THE INLET WALL.
5. INLET FRAME AND COVER TO BE DEETER #2014, EJIW #1936-Z4, OR APPROVED EQUAL, SEE SW-303.
6. CONTRACTOR SHALL REMOVE LIFTING HOOKS AFTER INSTALLATION. RECESSES IN INLET WALL SHALL BE GROUTED FLUSH TO THE INLET WALL WITH HYDRAULIC CEMENT AFTER THE INLET IS IN PLACE. LIFTING HOLES THRU THE INLET WALL WILL NOT BE ACCEPTED.

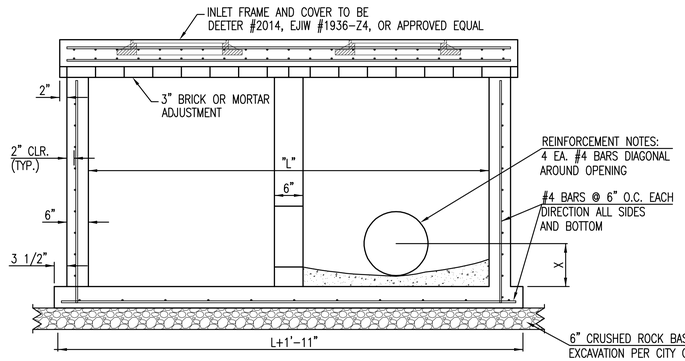

SECTION "A-A"

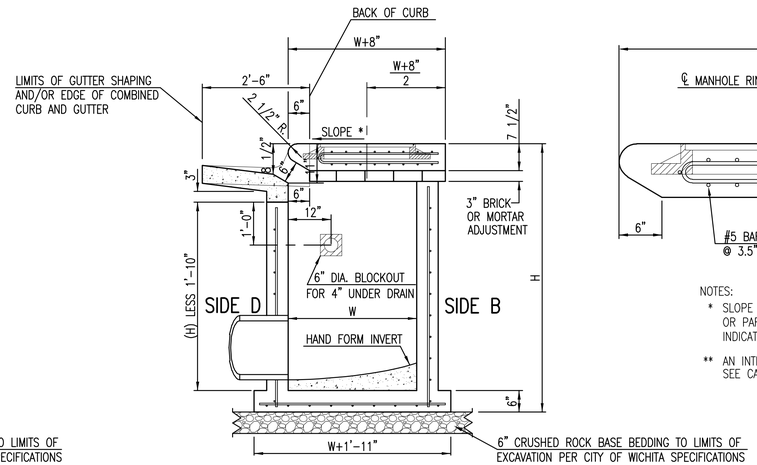

SECTION "C-C"

NOTES:
* SLOPE OF INLET TOP TO MATCH SIDEWALK OR PARKING SLOPES WITHIN LIMITS INDICATED.

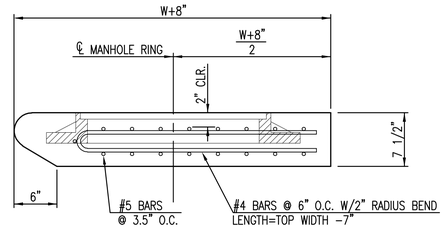

NOTES:
* SLOPE OF INLET TOP TO MATCH SIDEWALK OR PARKING SLOPES WITHIN LIMITS INDICATED.

** AN INTERIOR WALL OPENING SHALL BE PROVIDED. SEE CASE I AND CASE II.

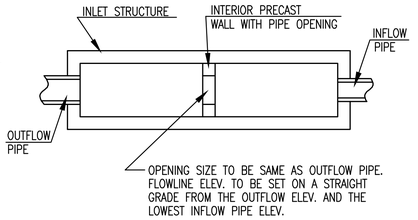

CASE I

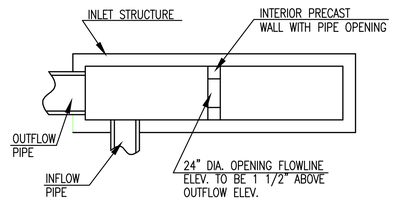

CASE II

NOTE: INTERIOR WALL OPENING SIZE SHALL BE AS SPECIFIED IN THE INLET CONSTRUCTION NOTE ON THE PLAN/ PROFILE SHEETS FOR THOSE CASES NOT SHOWN HERE.

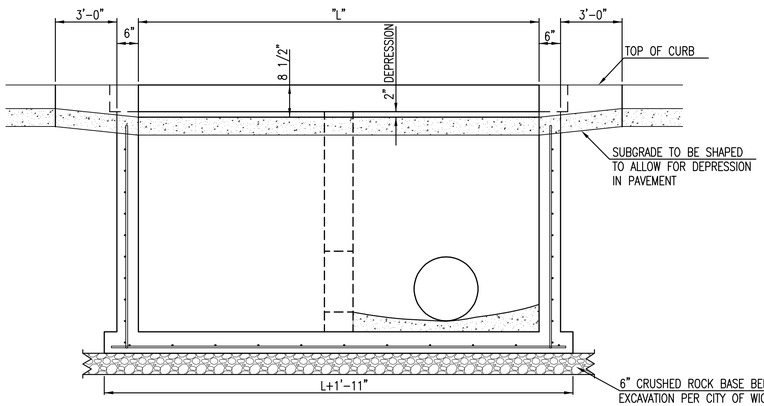

SECTION "B-B"

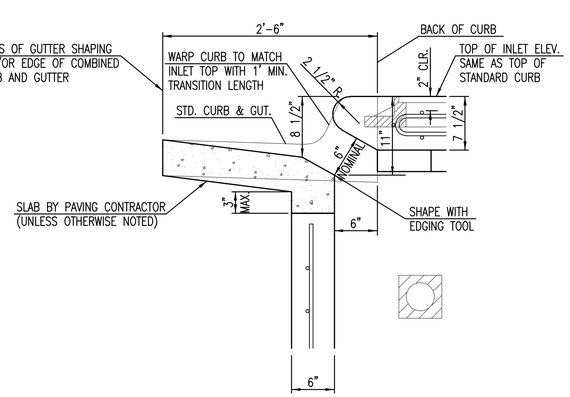

SECTION "D-D"

REVISED: MARCH 2015

CITY OF WICHITA
PUBLIC WORKS & UTILITIES ENGINEERING DIVISION

STANDARD TYPE 1 CURB INLET 15'-0" OPENING

CITY ENGINEER
GARY JANZEN, P.E.

PROJECT NUMBER	OCA NUMBER	DATE
472-85158	707065	11/29/17

CITY ENGINEER'S OFFICE
CITY HALL - SEVENTH FLOOR
455 NORTH MAIN STREET
WICHITA, KANSAS 67202-1620
(316) 268-4501

SHEET
56 OF 183

SW-102
Sh. No. 56

J:\PROJECTS\2014\1401040290 - COW_127TH E 13TH TO 21ST\05-CIVIL\CAD\SWS\1429SW-102.DWG

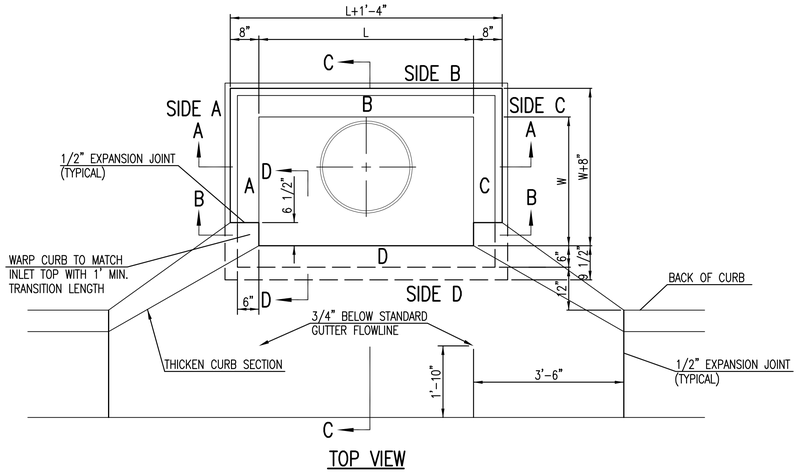

TOP VIEW

BAR SCHEDULE		
INLET OPENING	B1 BARS	SPACING
5'-0"	#4	4"
10'-0"	#6	3.5"

PRECAST CURB INLET WIDTHS				
W	PRE-CAST TOP SIZE			PIPE DIA.**
	WIDTH	LENGTH	TOP	
3'-0"	W+8"	L+1'-4"	7 1/2"	21" & SMALLER
4'-0"	W+8"	L+1'-4"	7 1/2"	24" & 30"
5'-0"	W+8"	L+1'-4"	7 1/2"	36" & 42"
6'-0"	W+8"	L+1'-4"	7 1/2"	48" & 54"
7'-0"	W+8"	L+1'-4"	7 1/2"	60" & 66"

** FOR PIPES PERPENDICULAR TO INLET WALL

GENERAL NOTES

1. CONCRETE TOPS TO BE INSTALLED ON THIN MORTAR CUSHION TO INSURE FULL SUPPORT ALONG BRICK. CONCRETE TOPS MAY BE CAST IN PLACE OR PRECAST. CONCRETE USED FOR INLET CONSTRUCTION SHALL CONFORM TO CITY OF WICHITA SPECIFICATIONS FOR CONCRETE PAVEMENT MIX.
2. CONTRACTOR SHALL HAVE THE OPTION OF CONSTRUCTING 8" BRICK MASONRY WALLS BETWEEN THE CONCRETE INLET BASE AND TOP OF THIS INLET WHEN W=5'-0" AND H=7'-0" OR LESS.
3. INLET INVERT SHALL BE SHAPED WITH 8 SACK SAND MIX CONCRETE TO CREATE FLOW CHANNELS AND TO INCREASE HYDRAULIC EFFICIENCY SUCH THAT THE INLET WILL BE SELF CLEANING BETWEEN ALL INLET AND/OR OUTLET PIPES.
4. THE ENDS OF ALL PIPES INSTALLED IN INLETS SHALL BE CUT OFF FLUSH WITH THE INSIDE FACE OF THE INLET WALL.
5. INLET FRAME AND COVER TO BE DEETER #2014, EJIW #1936-Z4, OR APPROVED EQUAL, SEE SW-303.
6. CONTRACTOR SHALL REMOVE LIFTING HOOKS AFTER INSTALLATION. RECESSES IN INLET WALL SHALL BE GROUTED FLUSH TO THE INLET WALL WITH HYDRAULIC CEMENT AFTER THE INLET IS IN PLACE. LIFTING HOLES THRU THE INLET WALL WILL NOT BE ACCEPTED.

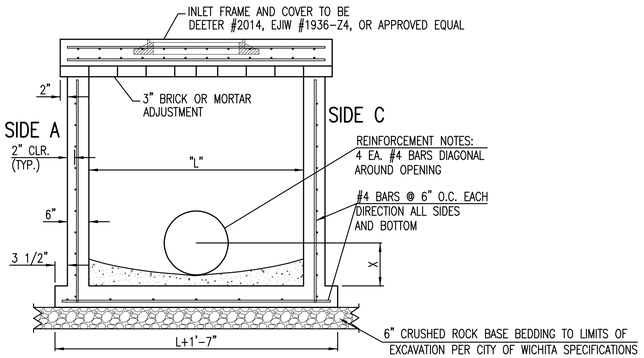

SECTION "A-A"

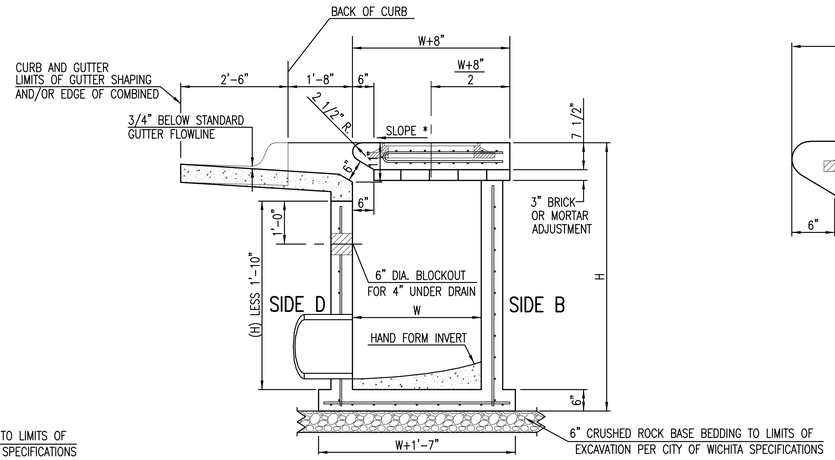

SECTION "C-C"

NOTES:
* SLOPE OF INLET TOP TO MATCH SIDEWALK OR PARKING SLOPES WITHIN LIMITS INDICATED.

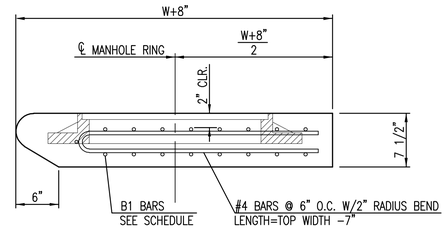

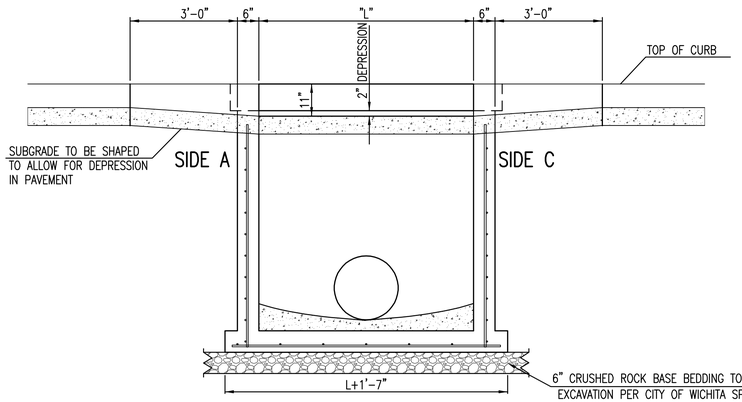

SECTION "B-B"

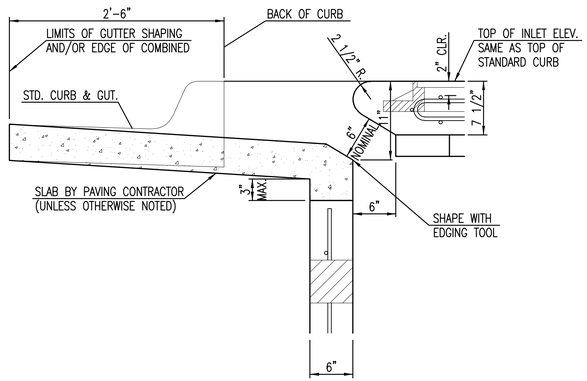

SECTION "D-D"

REVISED: MARCH 2015

CITY OF WICHITA
PUBLIC WORKS & UTILITIES
ENGINEERING DIVISION

STANDARD TYPE 1A CURB INLET 5'-0" OR 10'-0" OPENING

CITY ENGINEER
GARY JANZEN, P.E.

PROJECT NUMBER	OCA NUMBER	DATE
472-85158	707065	11/29/17

CITY ENGINEER'S OFFICE
CITY HALL - SEVENTH FLOOR
455 NORTH MAIN STREET
WICHITA, KANSAS 67202-1620
(316) 268-4501

SHEET
57 OF 183

SW-103
Sh. No. 57

Saved 05-04-2017 4:09:27 PM by JACOBSW
Plot Scale 1.1111 '/ Plot Date/Time 11/28/2017 2:54:44 PM by DEBRA MASON
J:\Projects\2014\1401040289 - COW_127th E 13th to 21st\05-Civil\CAD\Sws\14290-SW-103

J:\Projects\2014\1401040290 - COW_127th E 13th to 21st\05-Civil\CAD\Sws\14290-SW-103.dwg

PLOTTED: Wednesday, November 29, 2017 @ 02:54PM

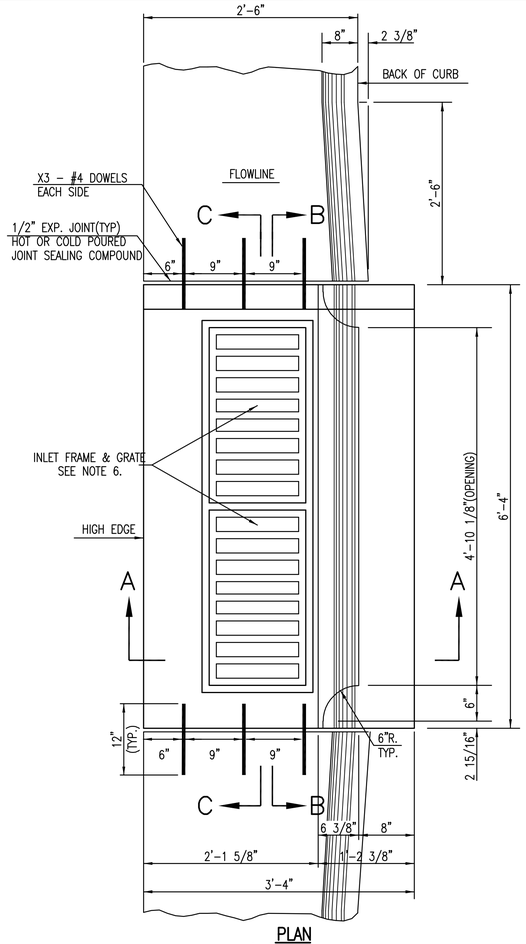

PLAN

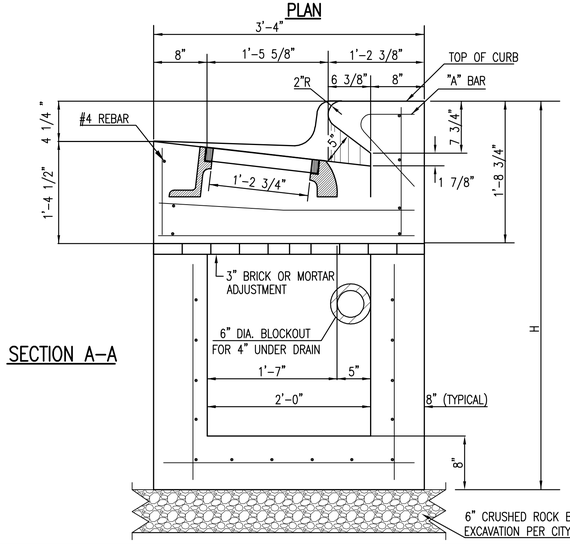

SECTION A-A

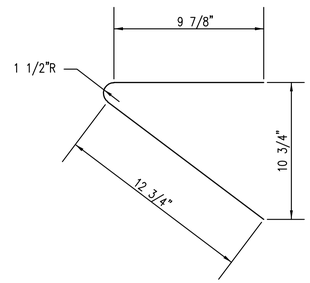

"A" BAR

BENDING DIAGRAM

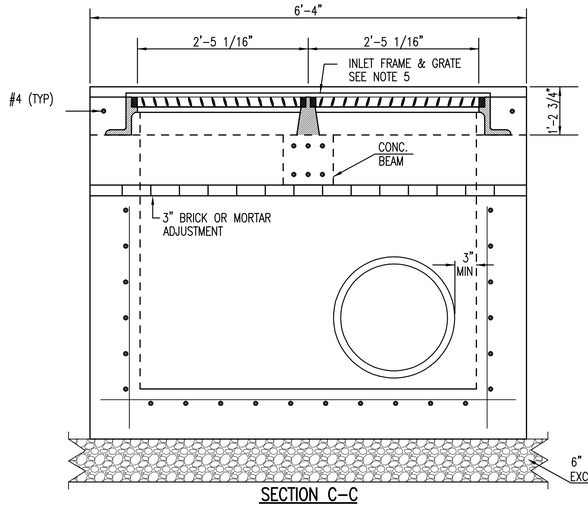

SECTION C-C

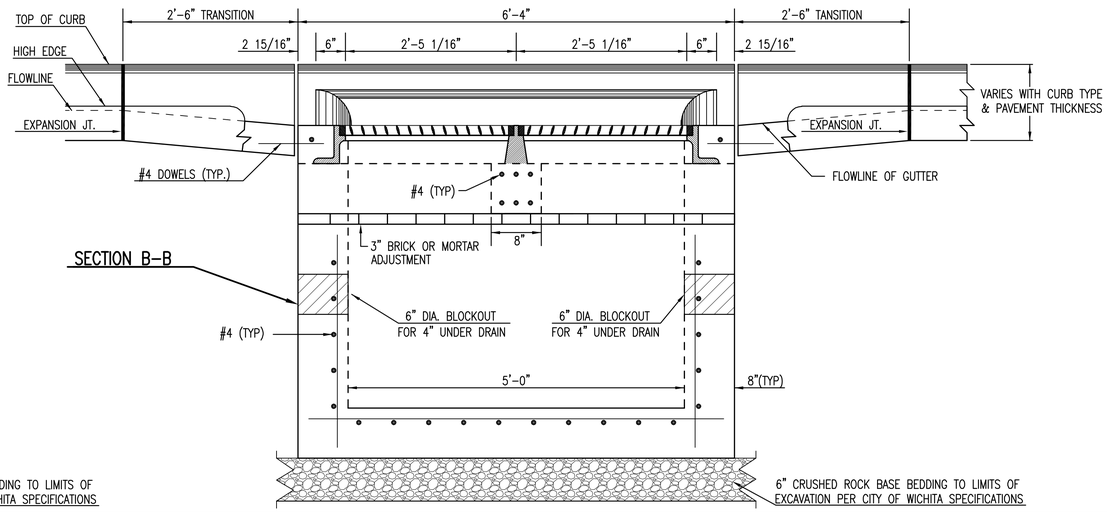

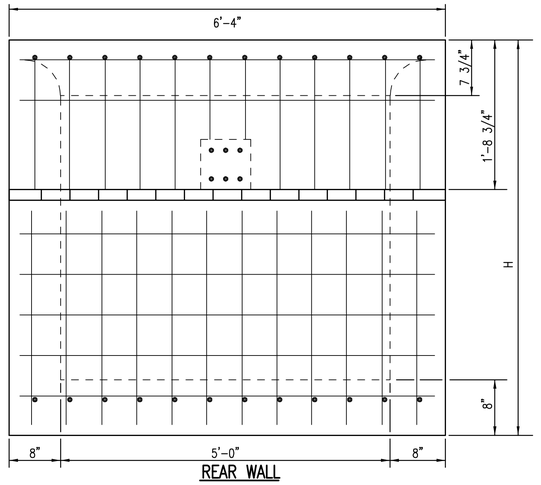

REAR WALL

GENERAL NOTES

1. USE THE CONCRETE MIX SPECIFIED FOR THE CITY OF WICHITA CONCRETE PAVEMENT THROUGHOUT. ALL EXPOSED EDGES SHALL BE FINISHED WITH AN EDGING TOOL. REINFORCING BARS SHALL BE BENT AROUND PIPE.
2. INLET INVERT SHALL BE SHAPED WITH 8 SACK MIX CONCRETE TO CREATE FLOW CHANNELS AND TO INCREASE HYDRAULIC EFFICIENCY SUCH THAT THE INLET WILL BE SELF CLEANING BETWEEN ALL INLET AND/OR OUTLET PIPES.
3. ALL BARS ARE #4 WITH 6" SPACING AND SHALL HAVE A MINIMUM CLEARANCE OF 1 1/2 INCHES UNLESS OTHERWISE NOTED ON THE PLANS.
4. NO DEDUCTIONS WILL BE MADE IN PAY LENGTH OF CURB, GUTTER, OR CURB AND GUTTER THROUGH THE INLET AREA.
5. USE DEETER FOUNDRY, INC. CASTING NO. 2442/43 OR EJIW 7600Z LEFT SIDE, 7600 RIGHT SIDE IN INLET FRAME AND GRATE WITH STYLE H GRATE. INLET FRAME TO BE PROOF LOAD TESTED TO 40,000 LBS. ON UNSUPPORTED SIDE.
6. REINFORCING BARS SHALL BE CUT OR BENT AROUND PIPES. NO DEDUCTION IN CONCRETE QUANTITIES SHALL BE MADE FOR PIPE OPENINGS.
7. THE VANES OF THE GRATE SHALL BE ORIENTED WITH RESPECT TO THE FLOW ARROWS SHOWN ON THE PLANS.
8. CONTRACTOR SHALL REMOVE LIFTING HOOKS AFTER INSTALLATION. RECESSES IN INLET WALL SHALL BE GROUTED FLUSH TO THE INLET WALL WITH HYDRAULIC CEMENT AFTER THE INLET IS IN PLACE. LIFTING HOLES THRU THE INLET WALL WILL NOT BE ACCEPTED.

REVISED: MARCH 2015

CITY OF WICHITA

PUBLIC WORKS & UTILITIES ENGINEERING DIVISION

STANDARD DOUBLE TYPE II CURB INLET

CITY ENGINEER

GARY JANZEN, P.E.

PROJECT NUMBER	OCA NUMBER	DATE
472-85158	707065	11/29/17

CITY ENGINEER'S OFFICE
CITY HALL - SEVENTH FLOOR
455 NORTH MAIN STREET
WICHITA, KANSAS 67202-1620
(316) 268-4501

SHEET

58 OF 183

SW-106

J:\PROJECTS\2014\401040290 - COW_127TH E 13TH TO 21ST\05-CIVIL\CAD\SWS\142905W-106.DWG

PLOTTED: Wednesday, November 29, 2017 @ 02:54PM

PAVEMENT UNDERDRAIN SHALL BE INSTALLED ON ALL CURB INLETS.

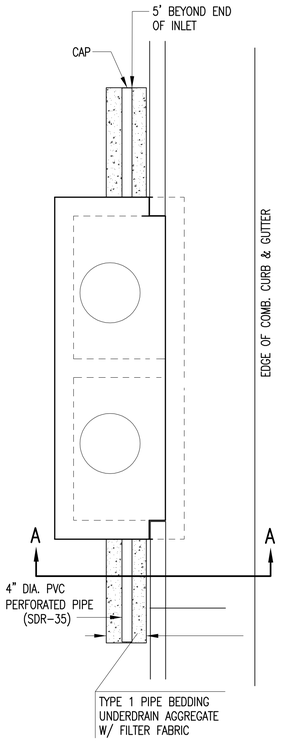

TYPE 1
OPTION 1

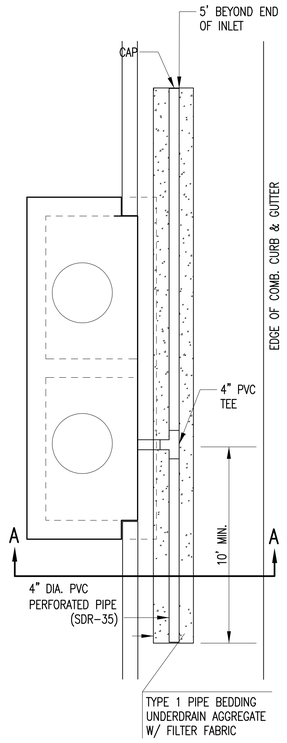

TYPE 1
OPTION 2

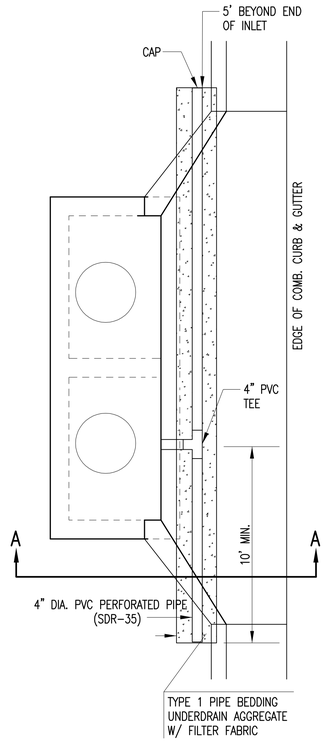

TYPE 1-A INLET
OPTION 1

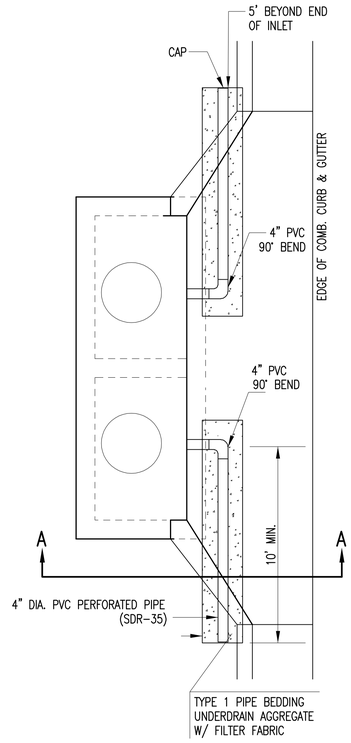

TYPE 1-A INLET
OPTION 2

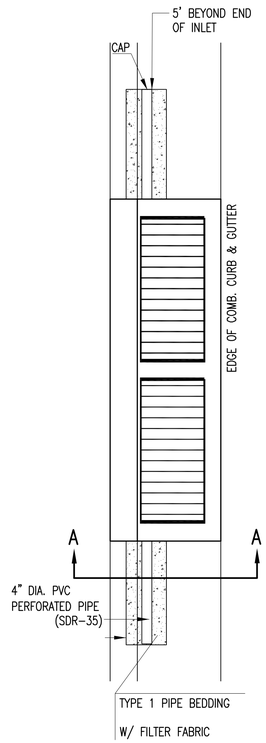

TYPE 2

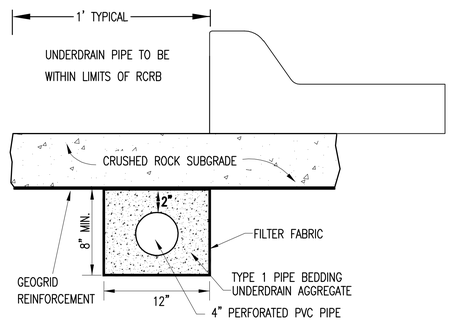

SECTION A-A (TYPICAL)

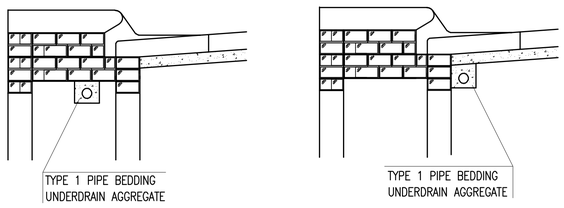

(MIN. 16 PERFORATIONS PER LIN. FT. @ 1/4" DIA.)
PERFORATIONS TO BE ON BOTTOM HALF

SECTION A-A

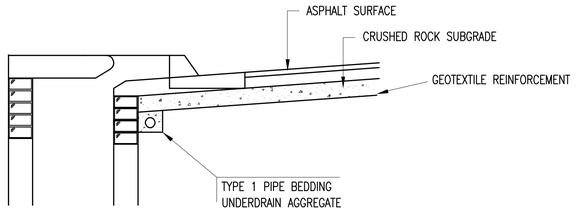

SECTION A-A

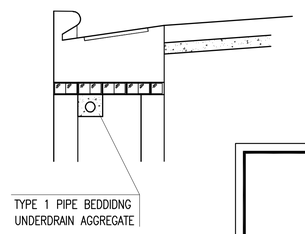

SECTION A-A

PAVEMENT UNDERDRAIN DETAIL

BID ITEM TO BE PROVIDED PER 4" PERFORATED UNDERDRAIN PIPE.

GENERAL NOTES

1. PAVEMENT CONTRACTOR WILL BE REQUIRED TO INSTALL SDR 35, 4" PERFORATED DRAIN PIPE AND TEE AS INDICATED IN THE DETAILS.
2. WHEN SWS CONSTRUCTED BY SEPARATE PROJECT, SWS CONTRACTOR SHALL INSTALL SDR 35, 4" DRAIN PIPE STUB ONLY THROUGH WALLS OF CURB INLETS AND CAP TO ALLOW FUTURE CONNECTION OF TEE AND ADDITIONAL DRAIN PIPE BY OTHERS.
2. UNDERDRAIN PIPE SHALL BE PAID AS A MEASURED QUANTITY BY THE LINEAL FOOT.

CITY OF WICHITA
PUBLIC WORKS & UTILITIES
ENGINEERING DIVISION

CURB INLET
PAVEMENT UNDERDRAIN
DETAIL

CITY ENGINEER
GARY JANZEN, P.E.

PROJECT NUMBER	OCA NUMBER	DATE
472-85158	707065	10/2012

CITY ENGINEER'S OFFICE
CITY HALL - SEVENTH FLOOR
455 NORTH MAIN STREET
WICHITA, KANSAS 67202-1620
(316) 268-4501

SHEET
59 OF 183

SW-111
Sh. No. 59

J:\PROJECTS\2014\1401040290 - COW_127TH E 13TH TO 21ST\05-CIVIL\CAD\SWS\14290SW-111.DWG

PLOTTED: Wednesday, November 29, 2017 @ 02:54PM

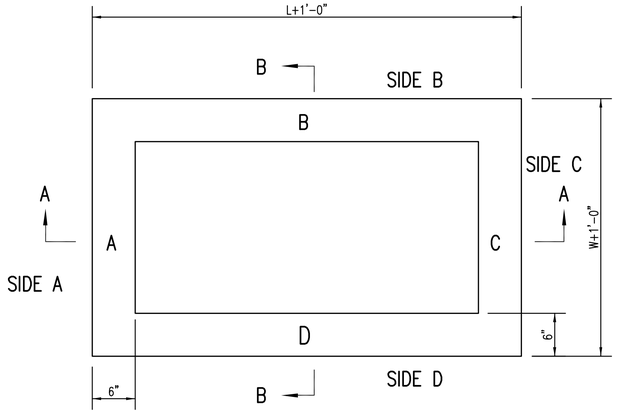

TOP VIEW

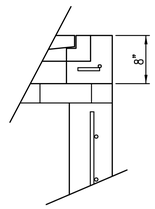

FLUSH STYLE TOP
NO APRON

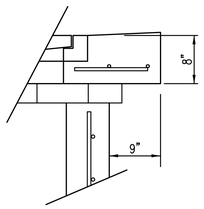

9" APRON

* APRON TO EXTEND ON ALL 4 SIDES OF INLET.
DESIGNER TO DESIGNATE APRON SIZE.

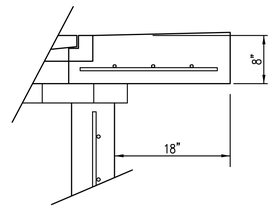

18" APRON

W=2' and L=2' for SINGLE DROP INLET
W=2' and L=4' for DOUBLE DROP INLET

The structure(s) on this detail sheet are designed for HS-20 loading at these specific dimensions only. If larger dimensions are required, the ENGINEER shall provide a project specific structure design for approval by the City Engineer's office.

GENERAL NOTES

1. GRATE FRAME TO BE INSTALLED ON THIN MORTAR CUSHION TO INSURE FULL SUPPORT ALONG BRICK. CONCRETE USED FOR INLET CONSTRUCTION SHALL CONFORM TO CITY OF WICHITA SPECIFICATIONS FOR CONCRETE PAVEMENT MIX.
2. INLET INVERT SHALL BE SHAPED WITH 8 SACK SAND MIX CONCRETE TO CREATE FLOW CHANNELS AND TO INCREASE HYDRAULIC EFFICIENCY SUCH THAT THE INLET WILL BE SELF CLEANING BETWEEN ALL INLET AND/OR OUTLET PIPES.
3. THE ENDS OF ALL PIPES INSTALLED IN INLETS SHALL BE CUT OFF FLUSH WITH THE INSIDE FACE OF THE INLET WALL.
4. INLET FRAME AND GRATE TO BE DEETER #2433, EJIW #5391-Z1 OR APPROVED EQUAL FOR 2'x2' SINGLE DROP INLET AND DEETER #2434, EJIW #5391 Z3 OR APPROVED EQUAL FOR 2'x4' DOUBLE DROP INLET.
5. CONTRACTOR SHALL REMOVE LIFTING HOOKS AFTER INSTALLATION. RECESSES IN INLET WALL SHALL BE GROUTED FLUSH TO THE INLET WALL WITH HYDRAULIC CEMENT AFTER THE INLET IS IN PLACE. LIFTING HOLES THRU THE INLET WALL WILL NOT BE ACCEPTED.

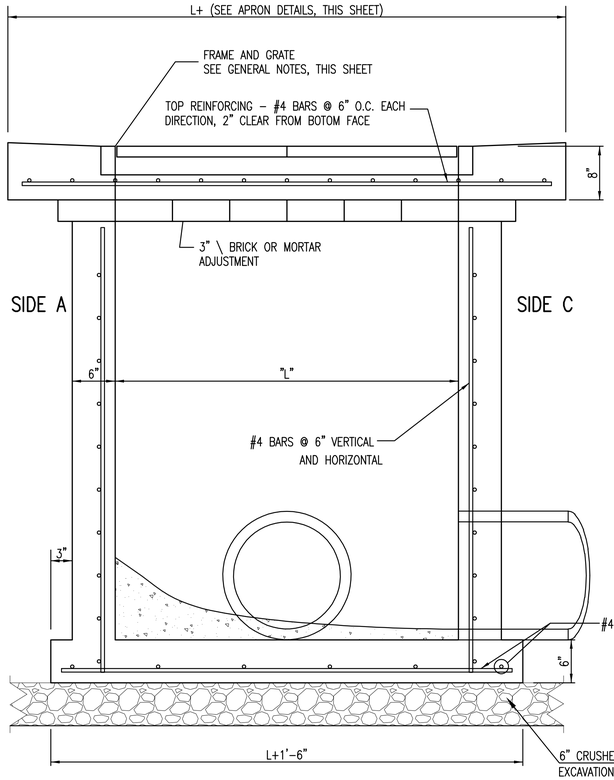

SECTION "A-A"

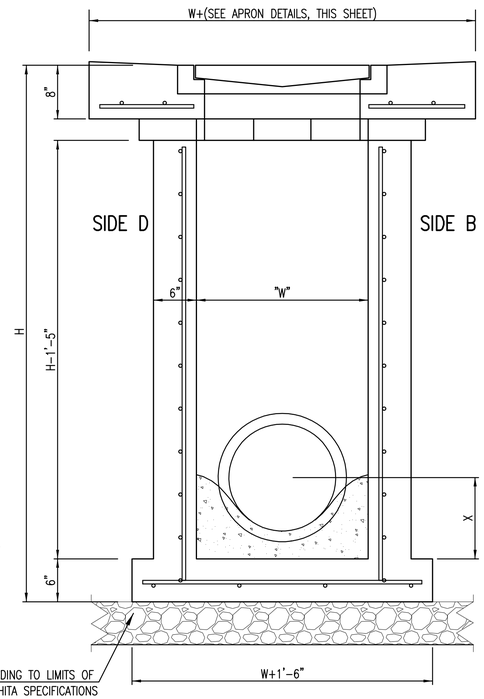

SECTION "B-B"
END OUTLET

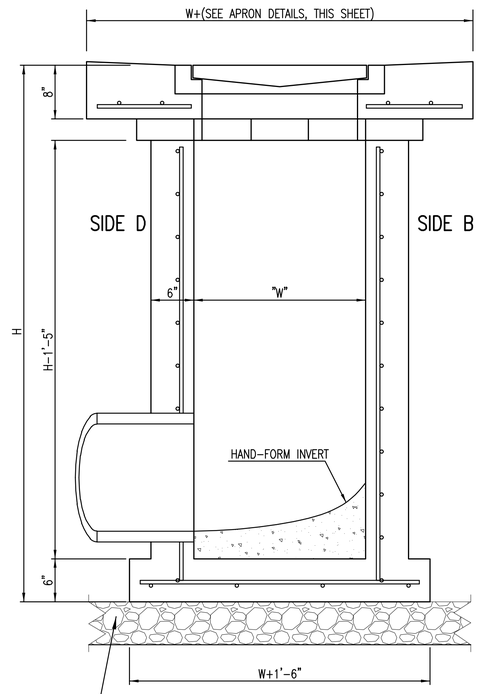

6" CRUSHED ROCK BASE BEDDING TO LIMITS OF EXCAVATION PER CITY OF WICHITA SPECIFICATIONS

SECTION "B-B"
SIDE OUTLET

REVISED: MARCH 2015

CITY OF WICHITA
PUBLIC WORKS & UTILITIES
ENGINEERING DIVISION

SINGLE/DOUBLE
DROP INLET

CITY ENGINEER
GARY JANZEN, P.E.

PROJECT NUMBER	OCA NUMBER	DATE
472-85158	707065	11/29/17

CITY ENGINEER'S OFFICE
CITY HALL - SEVENTH FLOOR
455 NORTH MAIN STREET
WICHITA, KANSAS 67202-1620
(316) 268-4501

SHEET
60 OF 183

SW-201
Sh. No. 60

J:\PROJECTS\2014\1401040290 - COW_127TH E. 13TH TO 21ST\05-CIVIL\CAD\SWS\14260SW-201.DWG

PLOTTED: Wednesday, November 29, 2017 @ 02:53PM

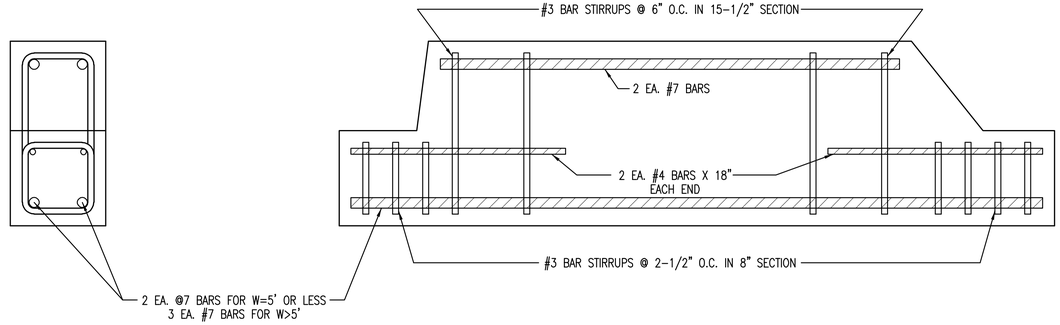

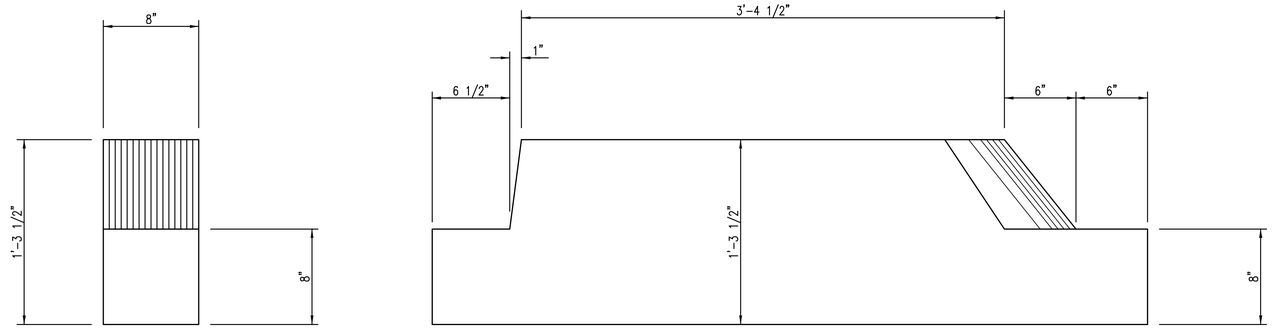

J:\PROJECTS\2014\1401940290 - COW_127TH E 13TH TO 21ST\05-CIVIL\CAD\SWS\142905W-110.DWG

CITY OF WICHITA
PUBLIC WORKS & UTILITIES
ENGINEERING DIVISION

INLET BEAM

CITY ENGINEER
GARY L. JANZEN, P.E.

PROJECT NUMBER	OCA NUMBER	DATE
472-85158	707065	11/2010

CITY ENGINEER'S OFFICE
CITY HALL - SEVENTH FLOOR
455 NORTH MAIN STREET
WICHITA, KANSAS 67202-1620
(316) 268-4501

SHEET
61 OF 183

SW-110
Sh. No. 61

PLOTTED: Wednesday, November 29, 2017 @ 02:58PM

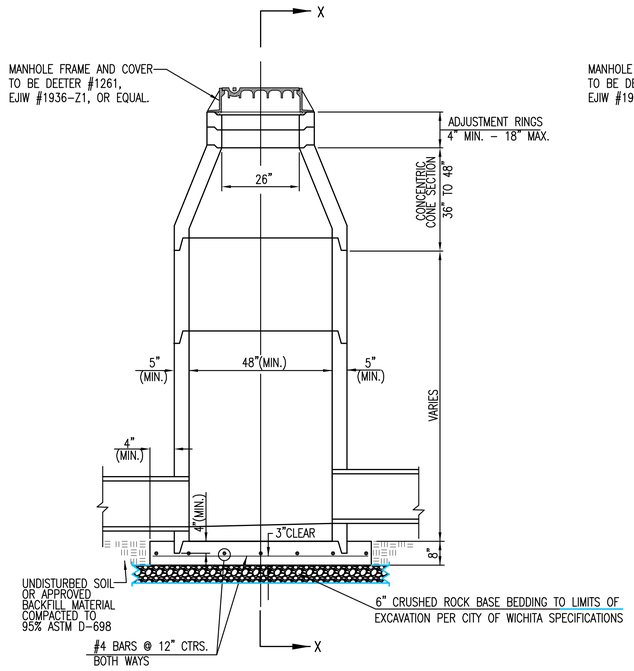

PRECAST
STANDARD MANHOLE
TYPE "A"

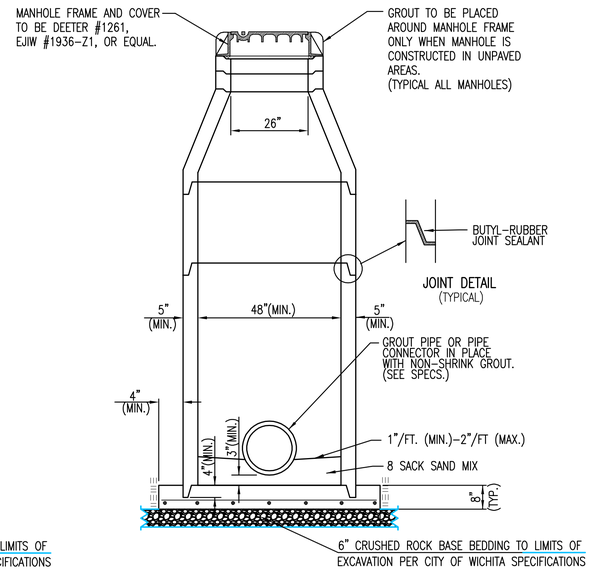

SECTION X-X
(TYPICAL)

GENERAL NOTES

1. IF, IN THE OPINION OF THE ENGINEER, THE MANHOLE SUBGRADE APPEARS UNSTABLE, THE CONTRACTOR WILL HAVE THE OPTION TO COMPACT SUBGRADE AS SHOWN OR INCREASE THE THICKNESS OF THE MANHOLE BASE AS DIRECTED BY THE ENGINEER.
2. STEEL REINFORCING WILL BE REQUIRED IN ALL MANHOLE BASES.
3. ALL MANHOLE CONSTRUCTION SHALL BE WATER TIGHT.
4. TOP OF MANHOLE FLOOR SLAB SHALL BE AT LEAST 3 INCHES BELOW THE FLOW LINE OF THE OUTLET PIPE TO INSURE SUFFICIENT MINIMUM THICKNESS OF SHAPED INVERT.
5. ALL PRECAST CONCRETE MANHOLE SECTIONS SHALL CONFORM TO THE LATEST REVISION OF ASTM C-478 AS MODIFIED BY THE SPECIFICATIONS.
6. CONCRETE USED FOR MANHOLE CONSTRUCTION SHALL CONFORM TO CITY OF WICHITA SPECIFICATIONS FOR CONCRETE PAVEMENT MIX.
7. PRECAST MANHOLES SHALL BE SET AT LEAST 4 INCHES INTO MANHOLE BASE.
8. MANHOLES WITH PIPE SIZES 24" AND LARGER SHALL HAVE 5 FOOT INSIDE DIAMETER (MIN.)
9. MANHOLES WITH PRECAST BASES MAY BE USED AT THE CONTRACTORS OPTION. THESE MANHOLES SHALL HAVE AN 8" MINIMUM BASE THICKNESS AND SHALL BE PLACED ON AN 8" MIN. CRUSHED ROCK BASE. PIPES SHALL BE ENCASED WITH CRUSHED ROCK TO AT LEAST 3 FEET FROM THE MANHOLE WALL.
10. CONTRACTOR SHALL REMOVE LIFTING HOOKS AFTER INSTALLATION. RECESSES IN MANHOLE WALL SHALL BE GROUTED FLUSH TO THE MANHOLE WALL WITH HYDRAULIC CEMENT AFTER THE MANHOLE IS IN PLACE. LIFTING HOLES THRU THE MANHOLE WALL WILL NOT BE ACCEPTED.
11. THE ENDS OF ALL PIPES IN MANHOLES SHALL BE CUT OFF FLUSH WITH THE INSIDE FACE OF THE MANHOLE WALL.
12. MANHOLE INVERT SHALL BE SHAPED WITH 8 SACK SAND MIX CONCRETE TO CREATE FLOW CHANNELS AND TO INCREASE HYDRAULIC EFFICIENCY SUCH THAT THE MANHOLE WILL BE SELF CLEANING BETWEEN ALL INLET AND/OR OUTLET PIPES.
13. MANHOLE FRAME AND COVER TO BE DEETER #1261, EJIW #1936-Z1, OR APPROVED EQUAL, SEE SW-303.
14. FOR FLAT GRATED INLET APPLICATION, GRATE TO BE DEETER #1933, EJIW #1205 MDI, OR APPROVED EQUAL.
15. FOR BEEHIVE GRATE APPLICATION, GRATE TO BE DEETER #4495, EJIW #120545, OR APPROVED EQUAL.

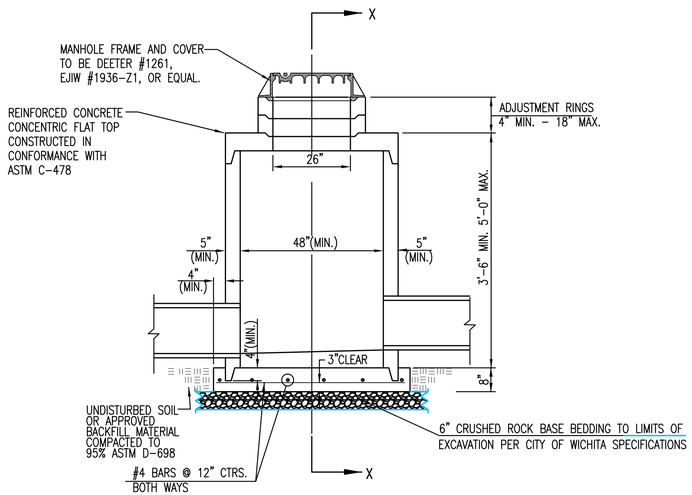

PRECAST
SHALLOW MANHOLE
TYPE "B"

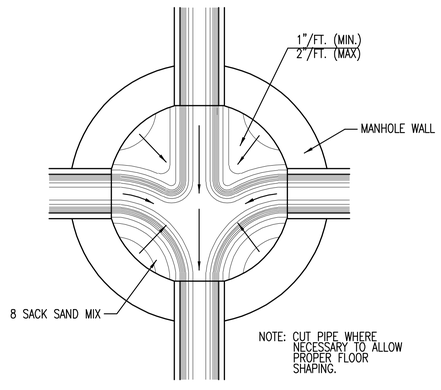

TYPICAL MANHOLE
FLOOR SHAPING

REVISED: MARCH 2015

CITY OF WICHITA
PUBLIC WORKS & UTILITIES
ENGINEERING DIVISION

PRECAST CONCRETE MANHOLE (STORM SEWER)

CITY ENGINEER
GARY JANZEN, P.E.

PROJECT NUMBER	OCA NUMBER	DATE
472-85158	707065	11/29/17

CITY ENGINEER'S OFFICE
CITY HALL - SEVENTH FLOOR
455 NORTH MAIN STREET
WICHITA, KANSAS 67202-1620
(316) 268-4501

SHEET
62 OF 183

SW-301
Sh. No. 62

J:\PROJECTS\2014\0140\0402\0 - COW_-127TH E 13TH TO 21ST\05-CIVIL\CAD\SWS\14290SW-301.DWG

PLOTTED: Wednesday, November 29, 2017 @ 02:53PM

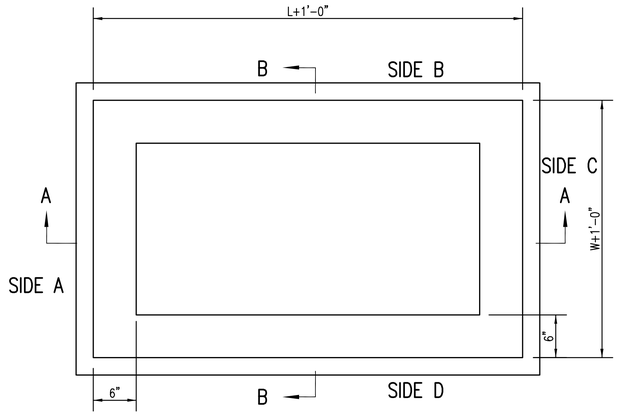

TOP VIEW

GENERAL NOTES

1. GRATE FRAME TO BE INSTALLED ON THIN MORTAR CUSHION TO INSURE FULL SUPPORT ALONG BRICK. CONCRETE USED FOR INLET CONSTRUCTION SHALL CONFORM TO CITY OF WICHITA SPECIFICATIONS FOR CONCRETE PAVEMENT MIX.
2. INLET INVERT SHALL BE SHAPED WITH 8 SACK SAND MIX CONCRETE TO CREATE FLOW CHANNELS AND TO INCREASE HYDRAULIC EFFICIENCY SUCH THAT THE INLET WILL BE SELF CLEANING BETWEEN ALL INLET AND/OR OUTLET PIPES.
3. THE ENDS OF ALL PIPES INSTALLED IN INLETS SHALL BE CUT OFF FLUSH WITH THE INSIDE FACE OF THE INLET WALL.
4. INLET FRAME AND GRATE TO BE DEETER #1261, EJIW #1936-Z1 OR APPROVED EQUAL, SEE SW-303.
5. CONTRACTOR SHALL REMOVE LIFTING HOOKS AFTER INSTALLATION. RECESSES IN MANHOLE WALL SHALL BE GROUTED FLUSH TO THE MANHOLE WALL WITH HYDRAULIC CEMENT AFTER THE MANHOLE IS IN PLACE. LIFTING HOLES THRU THE MANHOLE WALL WILL NOT BE ACCEPTED.

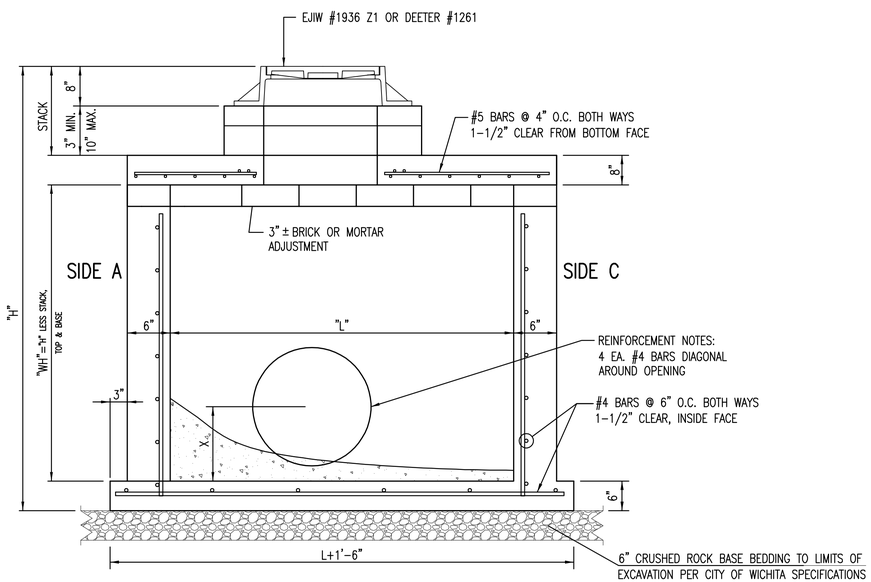

SECTION "A-A"

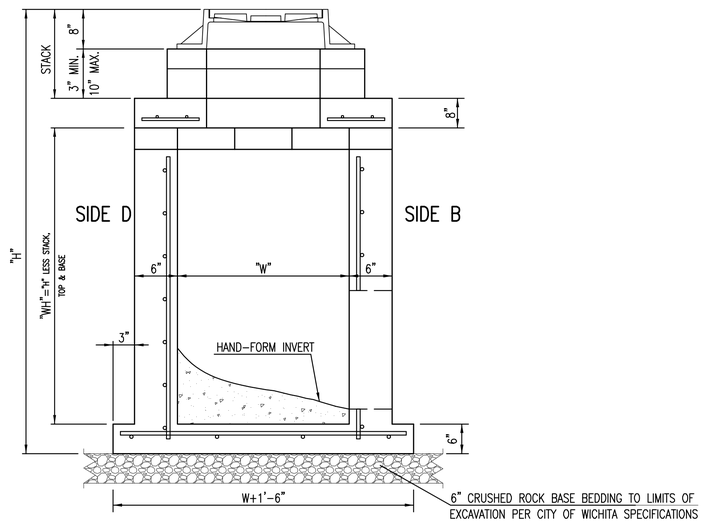

SECTION "B-B"

REVISED: MARCH 2015

CITY OF WICHITA
PUBLIC WORKS & UTILITIES
ENGINEERING DIVISION

REINFORCED CONCRETE MANHOLE (STORM SEWER)

CITY ENGINEER
GARY JANZEN, P.E.

PROJECT NUMBER	OCA NUMBER	DATE
472-85158	707065	11/29/17

CITY ENGINEER'S OFFICE
CITY HALL - SEVENTH FLOOR
455 NORTH MAIN STREET
WICHITA, KANSAS 67202-1620
(316) 268-4501

SHEET
63 OF 183

SW-302
Sh. No. 63

J:\PROJECTS\2014\1401940290 - COW_127TH E 13TH TO 21ST\05-CIVIL\CAD\SWS\14290SW-302.DWG

PLOTTED: Wednesday, November 29, 2017 @ 02:58PM

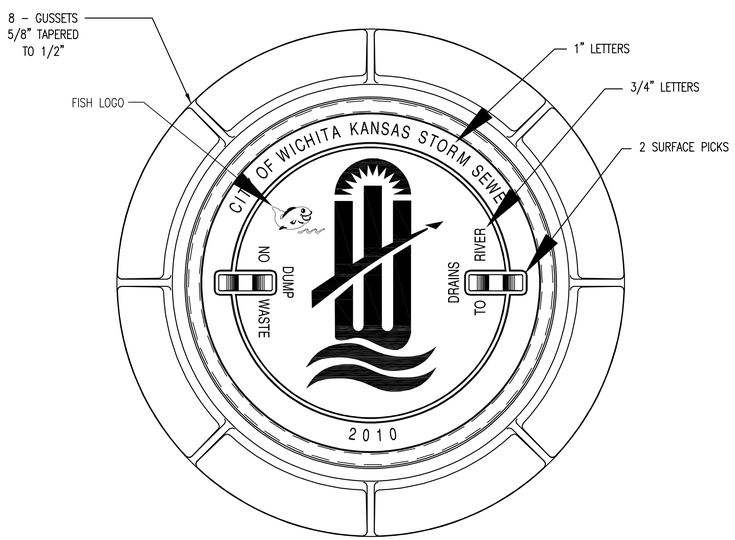

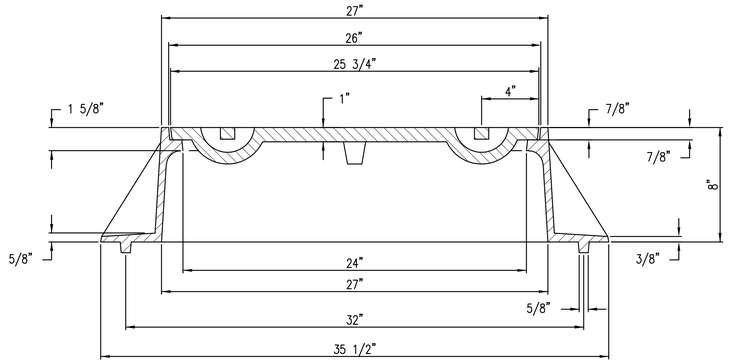

MANHOLE FRAME
DEETER #1261 OR EJIW #1936–Z1

NOTE:
1. FURNISHED WITH MACHINED HORIZONTAL BEARING SURFACE.
2. COVER TO BE DEETER #1261 OR EJIW #1936A.

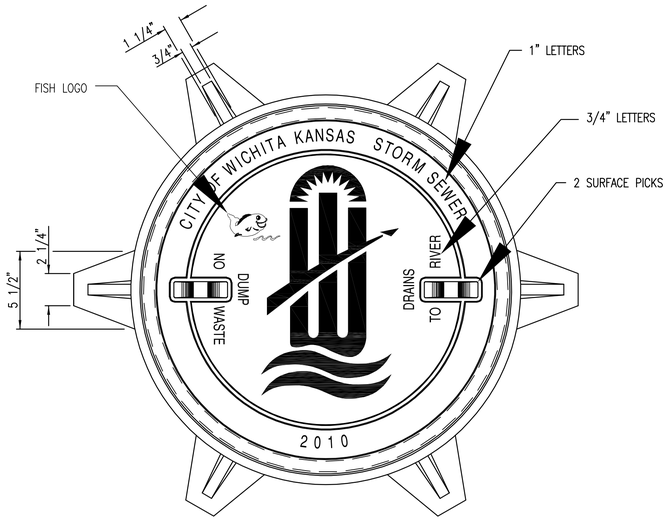

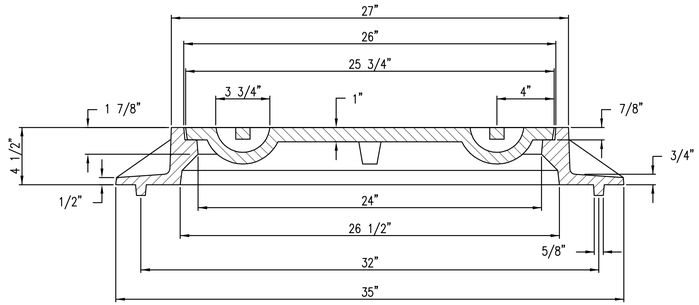

INLET FRAME
DEETER #2014 OR EJIW #1936–Z4

NOTE:
1. FURNISHED WITH MACHINED HORIZONTAL BEARING SURFACES.
2. NOT TO BE USED UNDER PAVEMENT.
3. COVER TO BE DEETER #1261 OR EJIW #1936A.

CITY OF WICHITA
PUBLIC WORKS & UTILITIES
ENGINEERING DIVISION

MANHOLE/INLET FRAME AND COVER (STORM SEWER)

CITY ENGINEER
GARY L. JANZEN, P.E.

PROJECT NUMBER	OCA NUMBER	DATE
472-85158	707065	11/2010

CITY ENGINEER'S OFFICE
CITY HALL – SEVENTH FLOOR
455 NORTH MAIN STREET
WICHITA, KANSAS 67202-1620
(316) 268-4501

SHEET
64 OF 183

SW–303
Sh. No. 64

J:\PROJECTS\2014\1401940290 - COW_127TH E 13TH TO 21ST\05-CIVIL\CAD\SWS\14290SW-303.DWG

PLOTTED: Wednesday, November 29, 2017 @ 02:53PM

STATE	PROJECT NO.	YEAR	SHEET NO.	TOTAL SHEETS
KANSAS	87 N-0615-01	2017	65	183

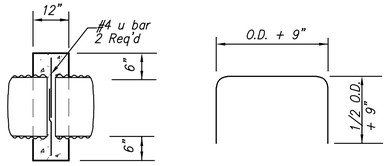

BENDING DIAGRAM

All dimensions are out-to-out of bars

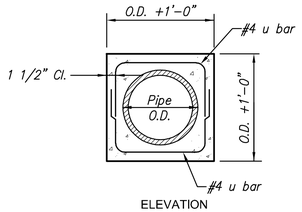

ELEVATION

COLLAR DETAIL

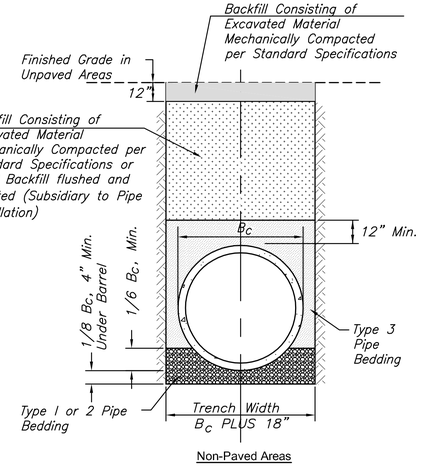

Non-Paved Areas

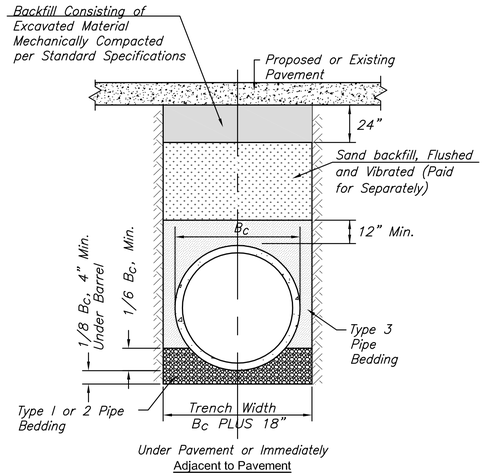

Under Pavement or Immediately Adjacent to Pavement

STORM SEWER TRENCH DETAILS

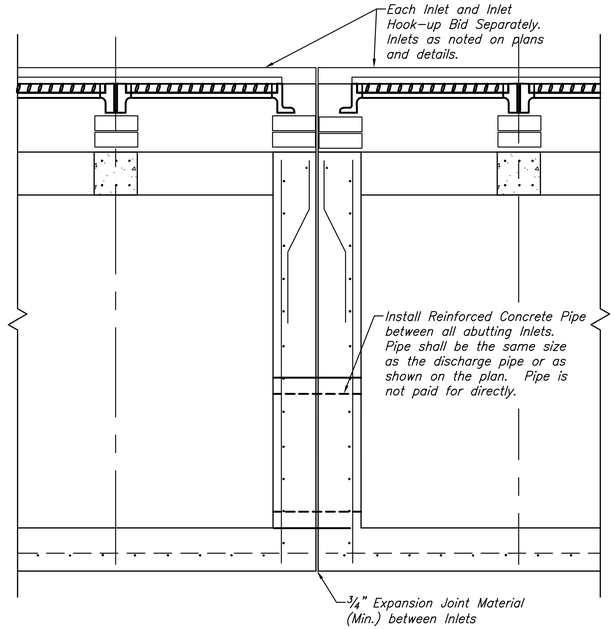

ABUTTING INLET CONNECTION DETAIL

Note: All Pre-Cast Concrete Manhole Stacks shall conform to the City of Wichita's Standard Specifications and the General Notes on the Standard Pre-Cast Manhole detail.

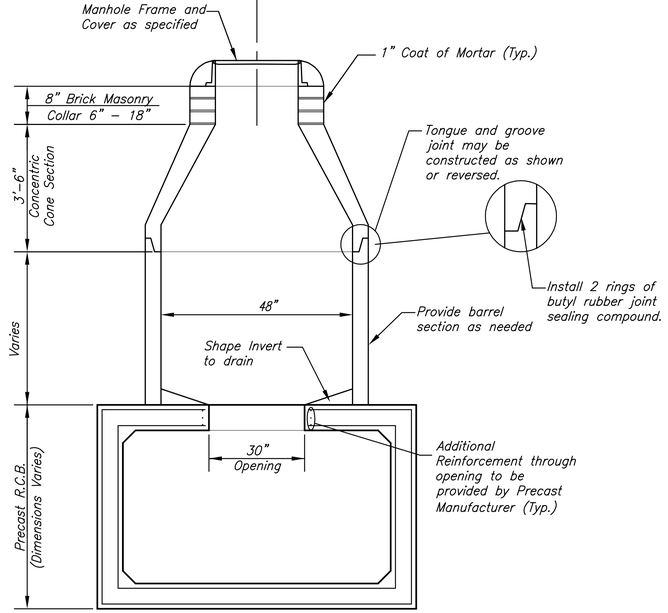

MANHOLE STACK DETAIL

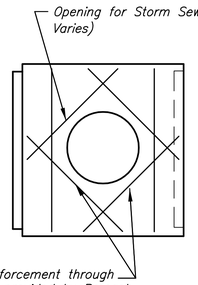

PIPE OPENING IN PRE-CAST RCB DETAIL

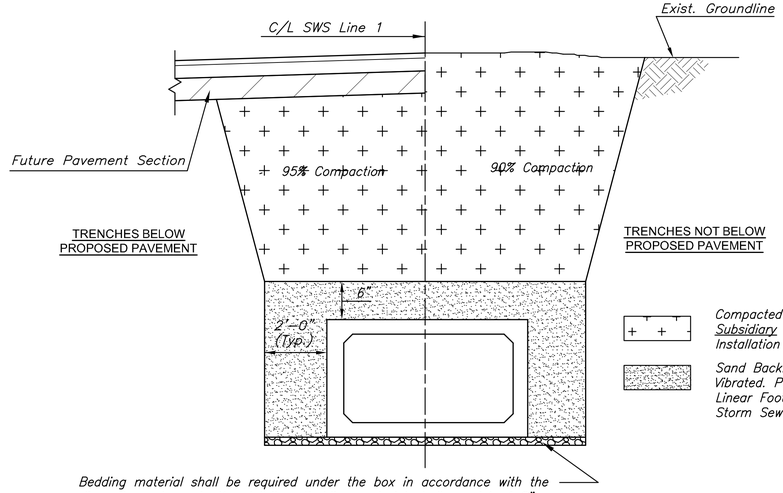

Bedding material shall be required under the box in accordance with the dimensions shown in the details. Bedding material shall consist of 6" thickness of crushed rock conforming to ASTM C-33, Gradation No. 67, and shall meet the requirements for Portland Cement Concrete Pavement Course Aggregate, Section 406.2 of the City of Wichita Standard Specifications. Bedding material shall be subsidiary to RCB Storm Sewer Items and shall include all necessary excavation.

RCB STORM SEWER TRENCH TYPICAL SECTION

See Sheet 72 for additional details pertaining to Precast Reinforced Concrete Boxes.

MKEC
Wichita, KS • 316-684-9600

STREET IMPROVEMENTS FOR

127TH STREET EAST

FROM 13TH STREET NORTH TO 21ST STREET NORTH

©2017
MKEC Engineering
All Rights Reserved
www.mkec.com
These drawings and their contents, including, but not limited to, all concepts, designs, & ideas are the exclusive property of MKEC Engineering (MKEC), and may not be used or reproduced in any way without the express consent of MKEC.

MISCELLANEOUS STORM SEWER DETAILS

PROJECT NO.	472-85158
DATE	11/29/17
SCALE	NTS

DESIGNED	DRAWN	CHECKED
JRA	LES	JRA

NO.	REVISION	DATE

SHEET NO.

65 OF 183

Sh. No. 65

J:\PROJECTS\2014\1401040299 - COW_127TH E 13TH TO 21ST\06-CIVIL\CAD\SWS\1429D001.DWG

PLOTTED: Wednesday, November 29, 2017 @ 02:53PM

STATE	PROJECT NO.	YEAR	SHEET NO.	TOTAL SHEETS
KANSAS	87 N–0615–01	2017	66	183

END SECTIONS ARE NOT PAID FOR SEPARATELY BUT ARE INCLUDED IN THE OVERALL PIPE LENGTH.

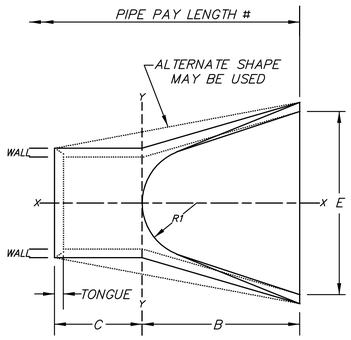

PIPE PLAN
ROUND PIPE

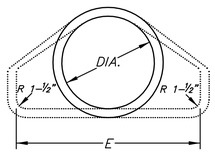

SECTION Y–Y
ROUND PIPE

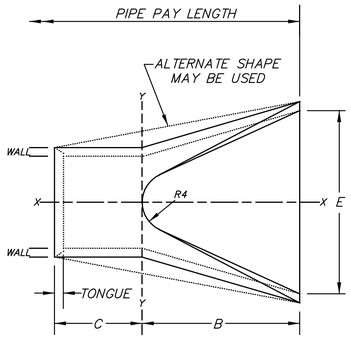

PIPE PLAN
ELIPTICAL PIPE

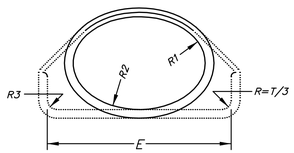

SECTION Y–Y
ELIPTICAL PIPE

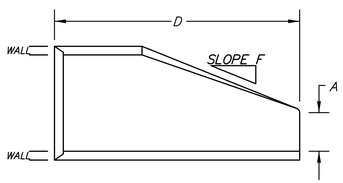

SECTION X–X

DIAM.	A	B	C	D	E	F	R1	TONGUE	WALL
42"	1'–9"	5'–3"	2'–11"	8'–2"	6'–6"	3:1	22"	3–3/4"	4–1/2"

END AREA SQ.FT.	ROUND EQUIV.	SPAN	RISE	WALL	A	B	C	D	E	R1	R2	R3	R4
16.6	54"	68"	43"	6"	25–1/2"	5'–0"	3'–0"	8'–0"	7'–6"	18–21/32"	58–15/32"	6"	16"

TONGUE LENGTHS BASED ON QUINN STANDARD

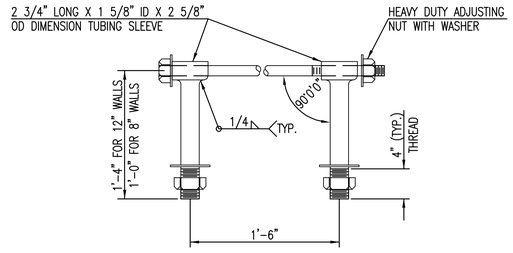

HEAVY DUTY (H.D.) COUPLER
NO SCALE

NOTES

1. BOLTS TO BE A–36 1 1/2" DIAMETER.
2. BOLTS, NUTS, WASHERS AND SLEEVES TO BE ZINC PLATED.
3. WASHERS TO BE 3 1/2" O.D. X 7 GAUGE.
4. SHIP WITH NUTS AND WASHERS PLACED ON BOLTS.
5. INSTALL PIPE COUPLER AT ALL STORM SEWER PIPE OUTFALLS. COUPLE A MINIMUM OF THREE JOINTS FROM THE END OF THE LINE.
6. TIES ARE SUBSIDIARY TO STORM SEWER INSTALLATIONS.

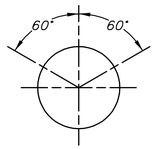

ROUND AND ELIPTICAL PIPE

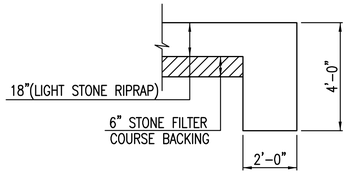

TYPICAL SECTION THRU TOEWALL
NO SCALE

NOTES

1. ALL RIPRAP FOR THIS PROJECT SHALL BE NATURAL STONE. NEITHER BROKEN CONCRETE, FABRIC ENVELOPE, NOR PREMIXED DRY PACKAGED CONCRETE BAG ALTERNATES WILL BE ALLOWED, UNLESS INDICATED OTHERWISE.
2. TOEWALLS SHALL BE INSTALLED ALONG ALL UNPROTECTED EDGES OF STONE RIPRAP.
3. GROUTING OF THE SURFACE OF THE RIPRAP SHALL NOT BE PERFORMED, UNLESS INDICATED OTHERWISE. GROUTING OF THE TOEWALLS SHALL BE PERFORMED PER CITY SPECIFICATIONS.

LIGHT STONE RIPRAP DETAILS

MKEC
Wichita, KS • 316-684-9600

STREET IMPROVEMENTS FOR

127TH STREET EAST

FROM 13TH STREET NORTH TO 21ST STREET NORTH

©2017
MKEC Engineering
All Rights Reserved
www.mkec.com
These drawings and their contents, including, but not limited to, all concepts, designs, & ideas are the exclusive property of MKEC Engineering (MKEC), and may not be used or reproduced in any way without the express consent of MKEC.

OUTFALL DETAILS

PROJECT NO.	472-85158
DATE	11/29/17
SCALE	NTS

DESIGNED	DRAWN	CHECKED
JRA	WNJ	JRA

NO.	REVISION	DATE

SHEET NO.

66 OF 183

Sh. No. 66

J:\PROJECTS\2014\140104290 - COV_127TH E. 13TH TO 21ST\05-CIVIL\CAD\SIVS\14290-DD07.DWG

PLOTTED: Wednesday, November 29, 2017 @ 02:56PM

STATE	PROJECT NO.	YEAR	SHEET NO.	TOTAL SHEETS
KANSAS	87 N-0615-01	2017	67	183

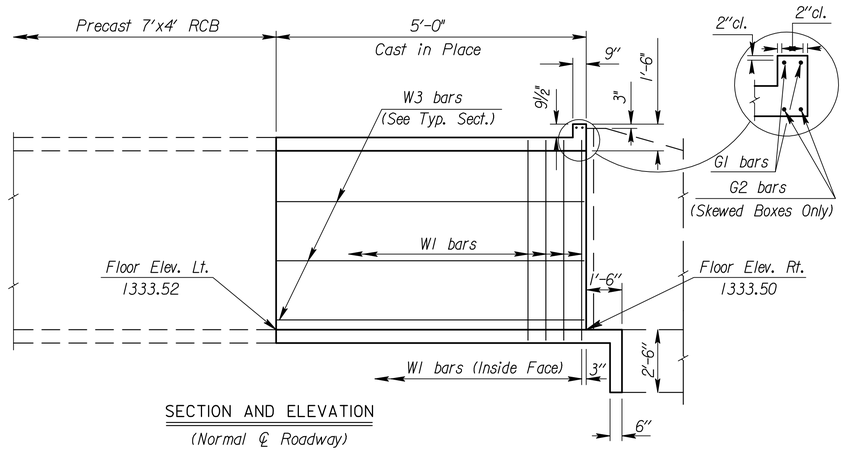

SECTION AND ELEVATION
(Normal ℄ Roadway)

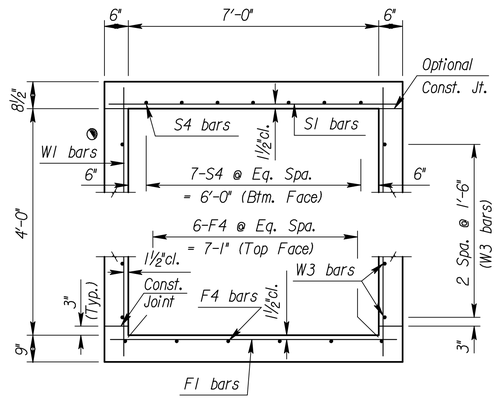

TYPICAL SECTION

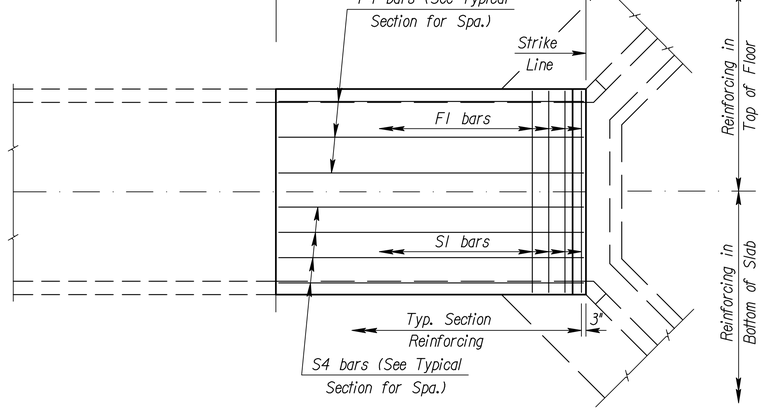

PLAN

GENERAL NOTES

DESIGN SPECIFICATION: AASHTO LRFD Spec., 2007 Ed., 2009 Int.

DESIGN LOADING: HL93

UNIT STRESSES: Grade 4.0 Concrete $f'c$ = 4,000 p.s.i.
Reinforcing Steel f_y = 60,000 p.s.i.

FILL HEIGHT: Unless otherwise noted, the Design Fill Height is measured from the riding surface at the culvert and includes the surfacing.

CONCRETE: Use concrete conforming to Grade 4.0 Concrete. Bevel all exposed edges with a ¾" triangular molding.

REINFORCING: Use reinforcing steel conforming to ASTM A615, Grade 60. All dimensions relative to reinforcing steel are to the centerline of the bar unless otherwise noted.

SEAL COURSE: The Engineer may require a seal course. The seal course shall be unreinforced Concrete (Commercial Grade) with a minimum depth of 3 inches or as determined by the Engineer. Concrete for the seal course shall be subsidiary to the bid item "Pipe, SWS, RCBC (7'x4')".

FOUNDATION STABILIZATION: The Foundation Stabilization quantity has been calculated to the limits shown on the "RCB Auxiliary Details" sheet. The depth may be increased by the Engineer. The Contractor may underrun Foundation Stabilization under the barrel if founded on firm material and with the Engineer's approval. Use Foundation Stabilization on all wingwalls unless founded on rock or granular material.

QUANTITIES: The quantities shown in the Culvert Summary include apron quantities.

GRANULAR BACKFILL (WINGWALLS): See the "Auxiliary Details" sheet.

STRIKE LINE: Construct the wingwalls and that portion of the RCB outside the Strike Line level. Construct the wingwall footings with the culvert floor. See the wingwall detail sheets.

⧗For design purposes ONLY. Do NOT use for Construction			CULVERT SUMMARY ◔ includes any welded wire fabric											LRFR RATING FACTORS	
Floor Elev. Lt.	Floor Elev. Rt.	Crown Gr. Elev.	⧗Design Fill Ht.	Skew	Left Wings	Right Wings	Scour Apron	Soil Saver	Concrete			Reinf. Steel (Gr. 60)			HL-93 Loading	
									Barrel (Cu.Yds.)	Wings (Cu.Yds.)	Total (Cu.Yds.)	Barrel (Lbs.)	◔Wings (Lbs.)	Total (Lbs.)	Inventory	Operating
1333.75	1333.50	1341.96	3	0	N/A	Flared	Yes	No	3.08	6.61	9.69	395	707	1102	1.35	1.75

BAR SCHEDULE																							
F1				F4			S1				S4			W1				W3				G1		
Size	Spa.	No.	Length	Size	No.	Length	Size	Spa.	No.	Length	Size	No.	Length	Size	Spa.	No.	Length	Size	No.	Length	Size	No.	Length
6	6½"	12	7'-8"	4	6	6'-2"	6	6½"	10	7'-8"	5	7	4'-8"	4	9"	14	5'-1"	4	6	4'-8"	5	2	7'-8"

Minimum Splice Lengths	
#4	1'-5"
#5	1'-9"

SUMMARY OF QUANTITIES	
Concrete (Grade 4.0)	9.7 C.Y.
Reinforcing Steel (Gr. 60)	1100 Lbs.
Foundation Stabilization	5 C.Y.
Concrete for Seal Course (Set)	1 C.Y.
Granular Backfill (Wingwalls)	12 C.Y.

NOTE: The Summary of Quantities is provided for information only. All materials, labor, and equipment required for the construction of the Cast in Place RCB (as shown) shall be considered subsidiary to the bid item "Pipe, SWS, RCBC (7'x4')".

MKEC
Wichita, KS • 316-684-9600

STREET IMPROVEMENTS FOR

127TH STREET EAST

FROM 13TH STREET NORTH TO 21ST STREET NORTH

©2017
MKEC Engineering
All Rights Reserved
www.mkec.com
These drawings and their contents, including, but not limited to, all concepts, designs, & ideas are the exclusive property of MKEC Engineering (MKEC) and may not be used or reproduced in any way without the express consent of MKEC.

STORM SEWER
LINE 1 - 7' x 4'
RCB DETAILS

PROJECT NO.	472-85158
DATE	11/29/17
SCALE	NTS

DESIGNED	DRAWN	CHECKED
JRA	DMU	KJS

NO.	REVISION	DATE

SHEET NO.
67 OF 183

Sh. No. 67

J:\PROJECTS\2013\140194299 - COW_127TH E 13TH TO 21ST\05-CIVIL\CAD\SWS-14299D03.DWG

PLOTTED: Wednesday, November 29, 2017 @ 02:56PM

STATE	PROJECT NO.	YEAR	SHEET NO.	TOTAL SHEETS
KANSAS	87 N-0615-01	2017	68	183

MKEC
Wichita, KS • 316-684-9600

127TH STREET EAST

STREET IMPROVEMENTS FOR
FROM 13TH STREET NORTH TO 21ST STREET NORTH

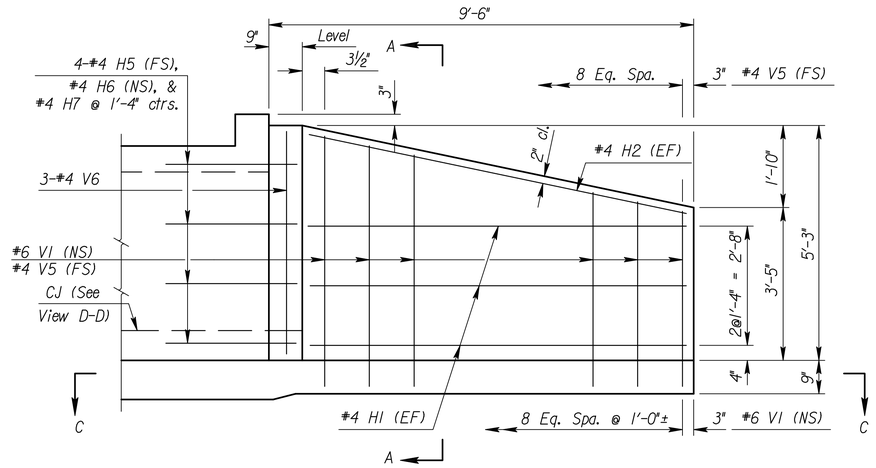

ELEVATION OF WINGWALL

(Backface Shown)

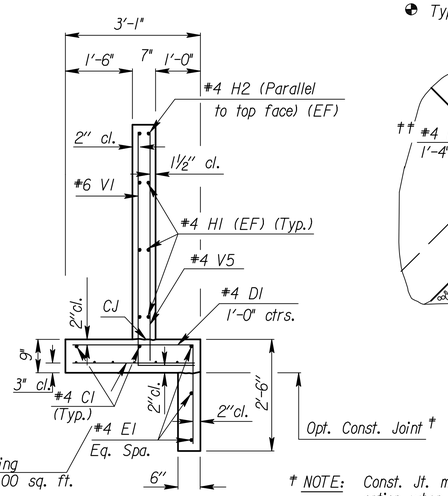

SECTION A-A

See "RCB Aux. Details" sheet for additional requirements.

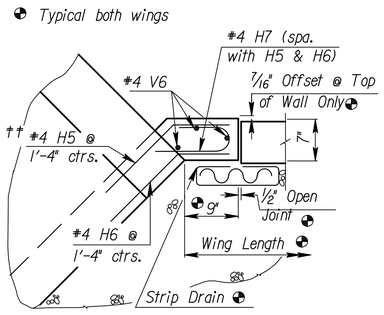

WINGWALL JOINT DETAIL

(Plan View)

† NOTE: Const. Jt. may be used at Contractor's option when approved by the Engineer. D1 bars or mesh may be spliced thus: ⌐ Minimum overlap shall be 1'-3". No increase in quantities or cost shall be allowed when Contractor elects this option.

GENERAL NOTES

DESIGN SPECIFICATION: AASHTO LRFD Spec., 2007 Ed., 2009 Int.

DESIGN LOADING: HL93

UNIT STRESSES: Grade 4.0 Concrete; f'c = 4,000 p.s.i.
Reinforcing Steel: f_y = 60,000 p.s.i.

CONCRETE: Grade 4.0 Concrete shall be used throughout. Bevel all exposed edges with a ¾" triangular moulding.

REINFORCING: All reinforcing shall conform to ASTM A615, Grade 60. Welded Wire Fabric shall conform to ASTM A185. All dimensions relative to reinforcing steel shall be to centerline of bar unless otherwise noted. Wire Reinforcing mesh shall be electrically welded and shall be composed of 6 x 6- W6 x W6 welded wire fabric and shall be classified as pounds of reinforcing and included in the total quantity for Reinforcing Steel (Gr. 60).

QUANTITIES: Wingwall Quantities include all quantities outside the neat lines of the box, excluding the hubguard.

APRON: A 5' concrete slab shall be constructed between the downstream wings in locations subject to scour only when specified on the plans or by the Engineer.

BACKFILL MATERIAL: Use Granular Backfill material meeting the requirements of SB-1, SB-2, SCA-1, SCA-2. Backfill all wings to limits shown on the "RCB Auxiliary Sheet".

FILTER FABRIC: Separate in-situ material from granular backfill with approved filter fabric complying with Section 1710. Filter Fabric is subsidiary to the bid item "Pipe, SWS, RCBC (7'x4')".

FOUNDATION STABILIZATION: Use Foundation Stabilization on all wingwalls unless founded on rock or granular material.

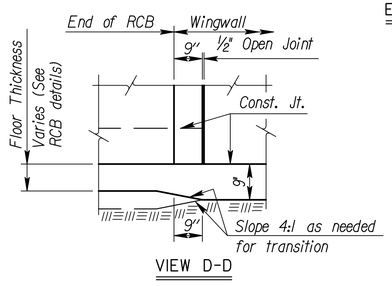

VIEW D-D

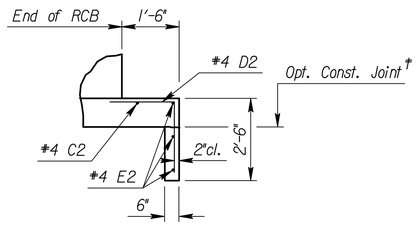

SECTION E-E

NOTE:
EF = Each Face
NS = Near Side
FS = Far Side
CJ = Const. Joint

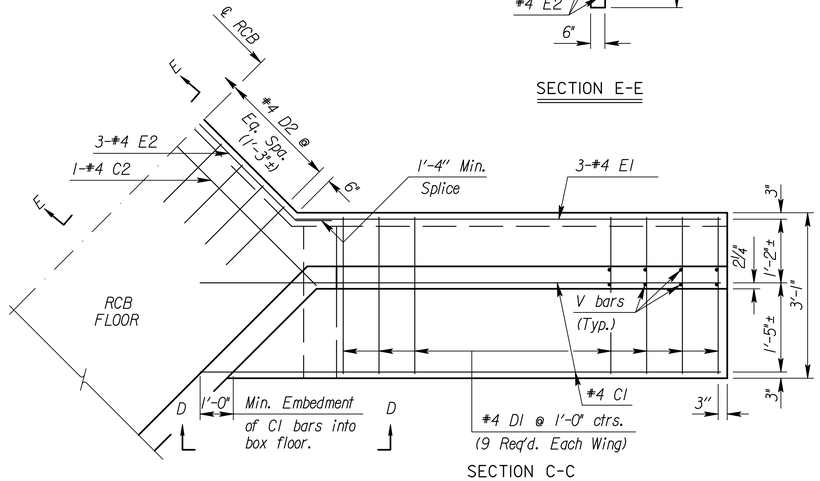

SECTION C-C

(Plan of Footing)

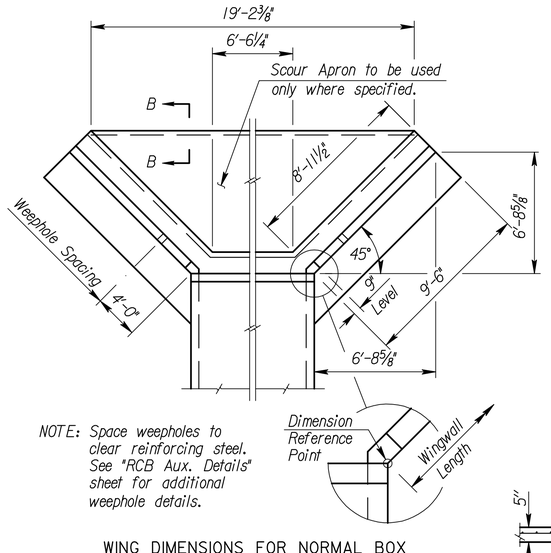

NOTE: Space weepholes to clear reinforcing steel. See "RCB Aux. Details" sheet for additional weephole details.

WING DIMENSIONS FOR NORMAL BOX

(3½:1 Embankment Slope)

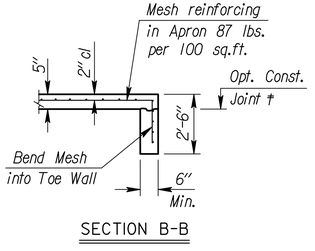

SECTION B-B

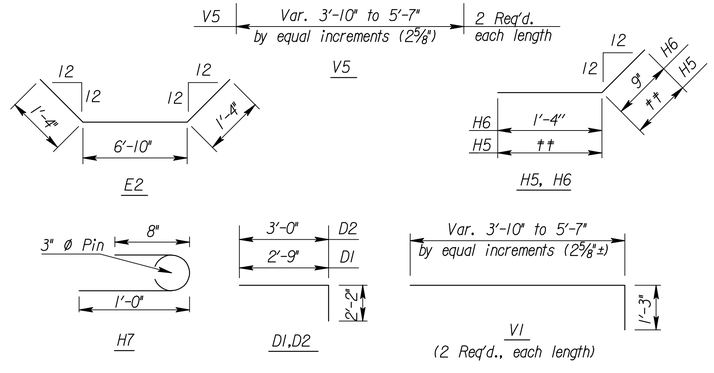

BENDING DIAGRAM

(All dimensions are out to out of bars.)
†† Bend in Field

* See Bending Diagram

		#4C1	#4D1	#4E1	#4C2	#4D2	#4E2	#6V1	#4H1	#4H2	#4H5	#4H6	#4H7	#4V5	#4V6
0° Skew	No.	4	18 *	6	1	5 *	3 *	18	12	4	8 *	8 *	8 *	18	6
	Length	11'-7"	4'-11"	8'-9"	7'-8"	5'-2"	9'-6"	*	8'-4"	8'-6"	1'-10"	2'-1"	1'-9"	*	5'-0"

Quantities listed below are provided for information only and are included in the Summary of Quantities shown on the RCB details.

WINGWALL QUANTITIES				
	Foundation Stabilization		Concrete (Gr. 4.0)	
Wingwalls	1.80	(C.Y.)	4.63	(C.Y.)
Apron	1.34	(C.Y.)	1.98	(C.Y.)
Soil Saver	0.00	(C.Y.)	0.00	(C.Y.)
Reinforcing Steel (Gr. 60)			543	Lbs.
Welded Wire Fabric (Wings)			51	Lbs.
Welded Wire Fabric (Apron)			113	Lbs.
Granular Backfill (Wingwalls)			12.00	C.Y.
Filter Fabric (subsidiary)			18.00	S.Y.

©2017
MKEC Engineering
All Rights Reserved
www.mkec.com
These drawings and their contents, including, but not limited to, all concepts, designs, & ideas are the exclusive property of MKEC Engineering (MKEC), and may not be used or reproduced in any way without the express consent of MKEC.

STORM SEWER
LINE 1 - 7' x 4' RCB
WING DETAILS

PROJECT NO.	472-85158
DATE	11/29/17
SCALE	NTS

DESIGNED	DRAWN	CHECKED
JRA	DMU	KJS

NO.	REVISION	DATE

SHEET NO.

68 OF 183

Sh. No. 68

J:\PROJECTS\2014\140194090 - COW_127TH E 13TH TO 21ST\05-CIVIL\CAD\SWS\142900D04.DWG

PLOTTED: Wednesday, November 29, 2017 @ 02:56PM

STATE	PROJECT NO.	YEAR	SHEET NO.	TOTAL SHEETS
KANSAS	87 N-0615-01	2017	69	183

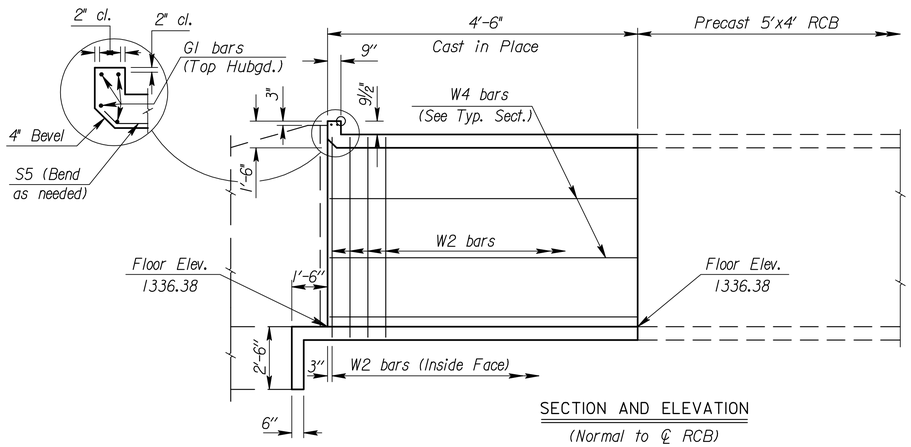

SECTION AND ELEVATION
(Normal to ℄ RCB)

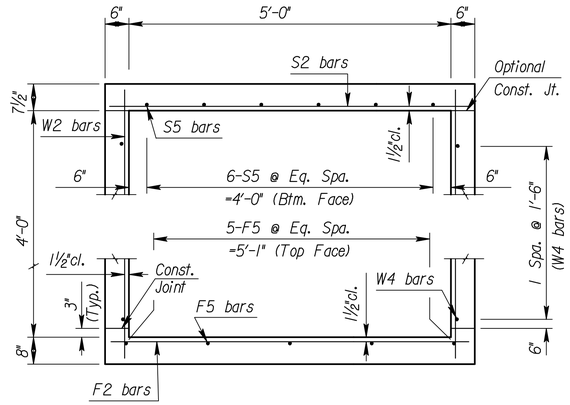

TYPICAL SECTION

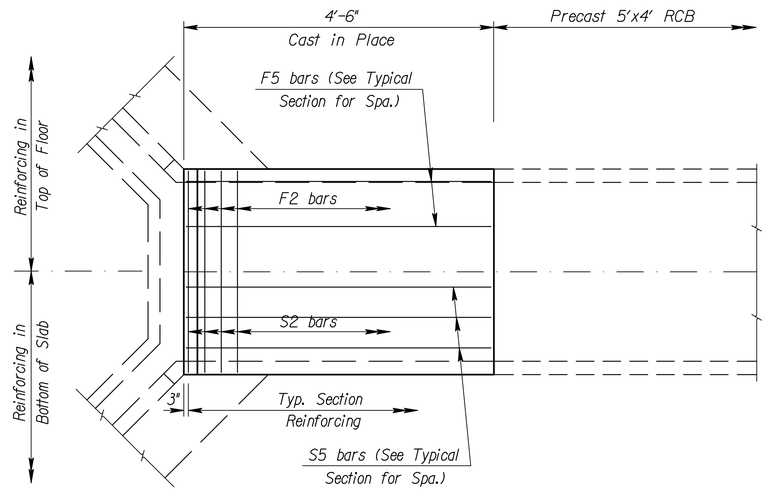

PLAN

GENERAL NOTES

DESIGN SPECIFICATION: AASHTO LRFD Spec., 2007 Ed., 2009 Int.

DESIGN LOADING: HL93

UNIT STRESSES: Grade 4.0 Concrete $f'c$ = 4,000 p.s.i.
Reinforcing Steel f_y = 60,000 p.s.i.

FILL HEIGHT: Unless otherwise noted, the Design Fill Height is measured from the riding surface at the culvert and includes the surfacing.

CONCRETE: Use concrete conforming to Grade 4.0 Concrete. Bevel all exposed edges with a ¾" triangular molding.

REINFORCING: Use reinforcing steel conforming to ASTM A615, Grade 60. All dimensions relative to reinforcing steel are to the centerline of the bar unless otherwise noted.

SEAL COURSE: The Engineer may require a seal course. The seal course shall be unreinforced Concrete (Commercial Grade) with a minimum depth of 3 inches or as determined by the Engineer. Concrete for the seal course shall be subsidiary to the bid item "Pipe, SWS, RCBC (5'x4')".

FOUNDATION STABILIZATION: The Foundation Stabilization quantity has been calculated to the limits shown on the "RCB Auxiliary Details" sheet. The depth may be increased by the Engineer. The Contractor may underrun Foundation Stabilization under the barrel if founded on firm material and with the Engineer's approval. Use Foundation Stabilization on all wingwalls unless founded on rock or granular material.

QUANTITIES: The quantities shown in the Culvert Summary include apron quantities.

GRANULAR BACKFILL (WINGWALLS): See the "Auxiliary Details" sheet.

⧗For design purposes ONLY. Do NOT use for Construction — CULVERT SUMMARY — ◔ includes any welded wire fabric

Floor Elev.	Crown Gr. Elev.	⧗Design Fill Ht.	Skew	U.S. Wings	D.S. Wings	Scour Apron	Soil Saver	Concrete			Reinf. Steel (Gr. 60)			LRFR RATING FACTORS	
								Barrel (Cu.Yds.)	Wings (Cu.Yds.)	Total (Cu.Yds.)	Barrel (Lbs.)	◔Wings (Lbs.)	Total (Lbs.)	HL-93 Loading Inventory	HL-93 Loading Operating
1336.38	N/A	2	0	Flared	N/A	No	No	2.09	3.72	5.81	283	474	757	1.68	2.17

BAR SCHEDULE

F2				F5			S2				S5			W2				W4			G2		
Size	Spa.	No.	Length	Size	No.	Length	Size	Spa.	No.	Length	Size	No.	Length	Size	Spa.	No.	Length	Size	No.	Length	Size	No.	Length
5	5"	14	5'-8"	4	5	5'-8"	5	5"	11	5'-8"	5	6	4'-2"	4	9"	14	4'-11"	4	4	4'-2"	5	4	5'-8"

SUMMARY OF QUANTITIES

Concrete (Grade 4.0)	5.8	C.Y.
Reinforcing Steel (Gr. 60)	757	Lbs.
Foundation Stabilization	3	C.Y.
Concrete for Seal Course (Set)	1	C.Y.
Granular Backfill (Wingwalls)	10	C.Y.

NOTE: The Summary of Quantities is provided for information only. All materials, labor, and equipment required for the construction of the Cast in Place RCB (as shown) shall be considered subsidiary to the bid item "Pipe, SWS, RCBC (5'x4')".

MKEC
Wichita, KS • 316-684-9600

STREET IMPROVEMENTS FOR

127TH STREET EAST

FROM 13TH STREET NORTH TO 21ST STREET NORTH

©2017
MKEC Engineering
All Rights Reserved
www.mkec.com
These drawings and their contents, including, but not limited to, all concepts, designs, & ideas are the exclusive property of MKEC Engineering (MKEC) and may not be used or reproduced in any way without the express consent of MKEC.

STORM SEWER
LINE 1 - 5' x 4'
RCB DETAILS

PROJECT NO.	472-85158
DATE	11/29/17
SCALE	NTS

DESIGNED	DRAWN	CHECKED
JRA	DMU	KJS

NO.	REVISION	DATE

SHEET NO.

69 OF 183

Sh. No. 69

J:\PROJECTS\2013\4\0140299 - COW_127TH E 13TH TO 21ST\05-CIVIL\CAD\SWS\14299D05.DWG

PLOTTED: Wednesday, November 29, 2017 @ 02:56PM

STATE	PROJECT NO.	YEAR	SHEET NO.	TOTAL SHEETS
KANSAS	87 N-0615-01	2017	70	183

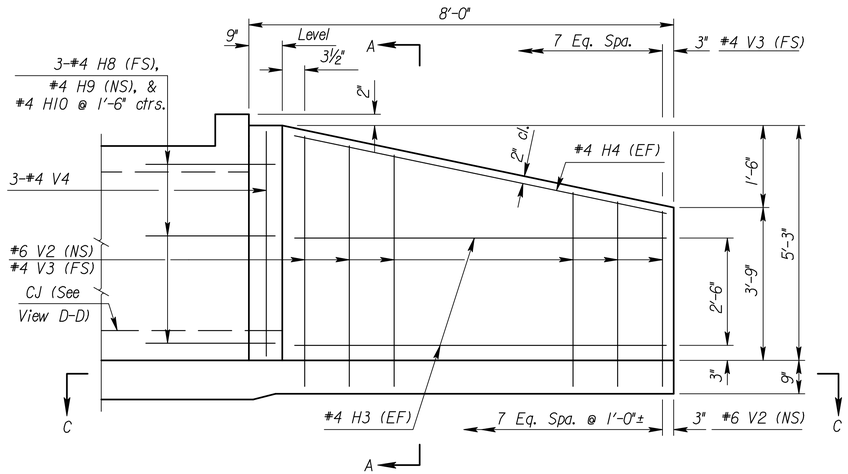

ELEVATION OF WINGWALL

(Backface Shown)

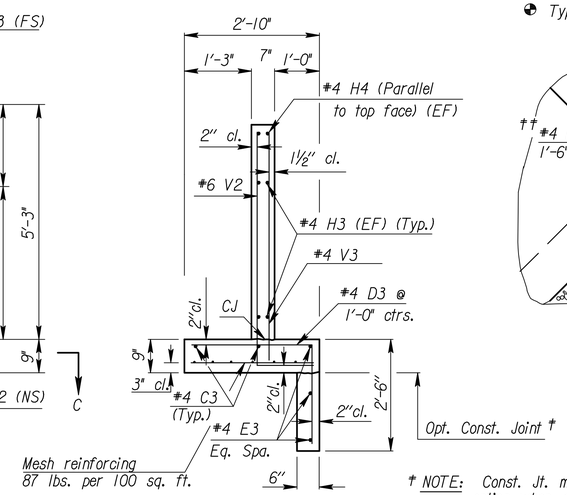

SECTION A-A

See "RCB Aux. Details" sheet for additional requirements.

Typical both wings

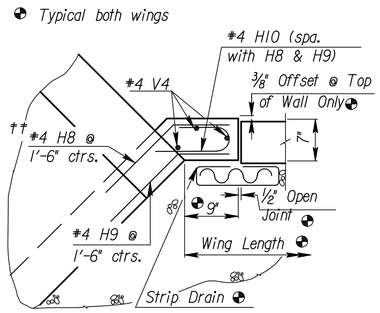

WINGWALL JOINT DETAIL

(Plan View)

† NOTE: Const. Jt. may be used at Contractor's option when approved by the Engineer. D3 bars or mesh may be spliced thus: ⌐ Minimum overlap shall be 1'-3". No increase in quantities or cost shall be allowed when Contractor elects this option.

GENERAL NOTES

DESIGN SPECIFICATION: AASHTO LRFD Spec., 2007 Ed., 2009 Int.

DESIGN LOADING: HL93

UNIT STRESSES: Grade 4.0 Concrete; f'c = 4,000 p.s.i.
Reinforcing Steel; f_y = 60,000 p.s.i.

CONCRETE: Grade 4.0 Concrete shall be used throughout. Bevel all exposed edges with a ¾" triangular moulding.

REINFORCING: All reinforcing shall conform to ASTM A615, Grade 60. Welded Wire Fabric shall conform to ASTM A185. All dimensions relative to reinforcing steel shall be to centerline of bar unless otherwise noted. Wire Reinforcing mesh shall be electrically welded and shall be composed of 6 x 6- W6 x W6 welded wire fabric and shall be classified as pounds of reinforcing and included in the total quantity for Reinforcing Steel (Gr. 60).

QUANTITIES: Wingwall Quantities include all quantities outside the neat lines of the box, excluding the hubguard.

APRON: A 5' concrete slab shall be constructed between the downstream wings in locations subject to scour only when specified on the plans or by the Engineer.

BACKFILL MATERIAL: Use Granular Backfill material meeting the requirements of SB-1, SB-2, SCA-1, SCA-2. Backfill all wings to limits shown on the "RCB Auxiliary Sheet".

FILTER FABRIC: Separate in-situ material from granular backfill with approved filter fabric complying with Section 1710. Filter Fabric is subsidiary to the bid item "Pipe, SWS, RCBC (5'x4')".

FOUNDATION STABILIZATION: Use Foundation Stabilization on all wingwalls unless founded on rock or granular material.

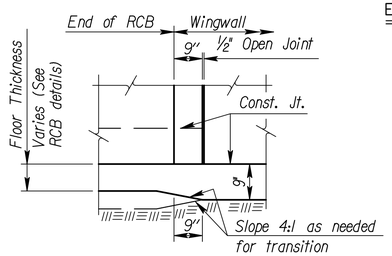

VIEW D-D

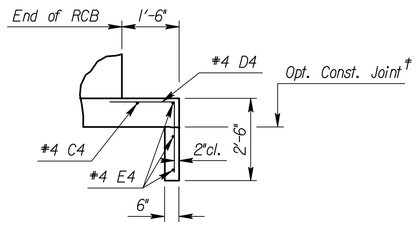

SECTION E-E

NOTE:
EF = Each Face
NS = Near Side
FS = Far Side
CJ = Const. Joint

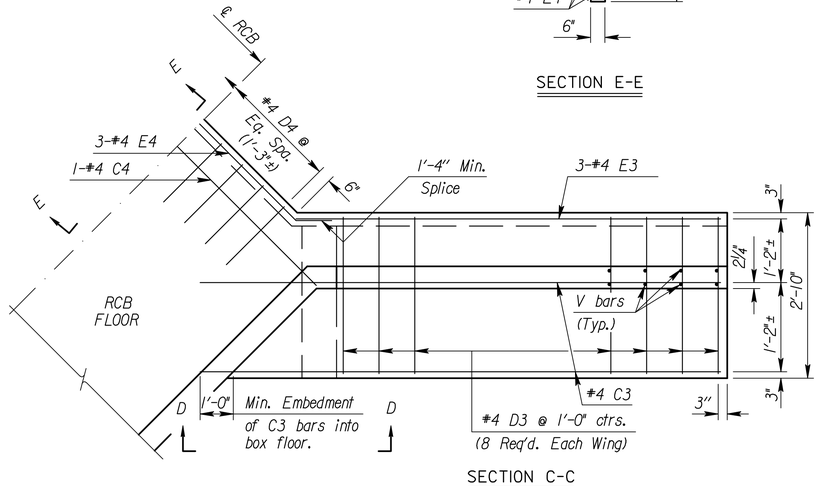

SECTION C-C

(Plan of Footing)

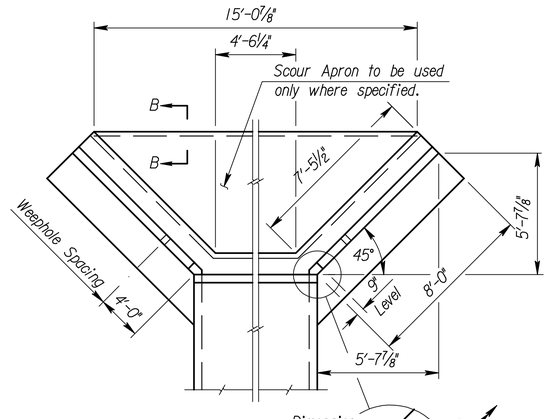

NOTE: Space weepholes to clear reinforcing steel. See "RCB Aux. Details" sheet for additional weephole details.

WING DIMENSIONS FOR NORMAL BOX

(3½:1 Embankment Slope)

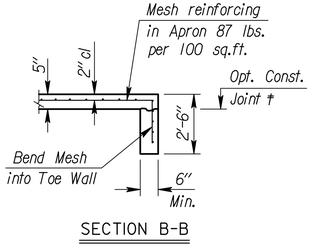

SECTION B-B

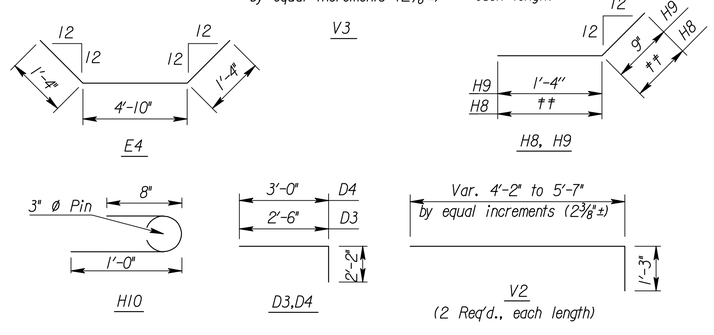

BENDING DIAGRAM

(All dimensions are out to out of bars.)
†† Bend in Field

NOTE: Reinforcing Bar List is for both wings at one end of box only. * See Bending Diagram

		#4C3	#4D3	#4E3	#4C4	#4D4	#4E4	#6V2	#4H3	#4H4	#4H8	#4H9	#4H10	#4V3	#4V4
0° Skew	No.	4	16 *	6	1	4 *	3 *	16	8	4	6 *	6 *	6 *	16	6
	Length	9'-10"	4'-8"	7'-3"	5'-8"	5'-2"	7'-6"	*	6'-10"	7'-0"	1'-10"	2'-1"	1'-9"	*	5'-0"

Quantities listed below are provided for information only and are included in the Summary of Quantities shown on the RCB details.

WINGWALL QUANTITIES (One End Only)				
	Foundation Stabilization		Concrete (Gr. 4.0)	
Wingwalls	1.44	(C.Y.)	3.72	(C.Y.)
Apron	0.00	(C.Y.)	0.00	(C.Y.)
Soil Saver	0.00	(C.Y.)	0.00	(C.Y.)
Reinforcing Steel (Gr. 60)			435	Lbs.
Welded Wire Fabric (Wings)			39	Lbs.
Welded Wire Fabric (Apron)			0	Lbs.
Granular Backfill (Wingwalls)			10.07	C.Y.
Filter Fabric (subsidiary)			14.00	S.Y.

MKEC
Wichita, KS • 316-684-9600

STREET IMPROVEMENTS FOR

127TH STREET EAST

FROM 13TH STREET NORTH TO 21ST STREET NORTH

©2017
MKEC Engineering
All Rights Reserved
www.mkec.com
These drawings and their contents, including, but not limited to, all concepts, designs, & ideas are the exclusive property of MKEC Engineering (MKEC), and may not be used or reproduced in any way without the express consent of MKEC.

STORM SEWER
LINE 1 - 5' x 4' RCB
WING DETAILS

PROJECT NO.	472-85158
DATE	11/29/17
SCALE	NTS
DESIGNED	JRA
DRAWN	DMU
CHECKED	KJS

NO.	REVISION	DATE

SHEET NO.

70 OF 183

Sh. No. 70

J:\PROJECTS\2014\140194090 - COW_127TH E 13TH TO 21ST\05-CIVIL\CAD\SWS\142900D06.DWG

PLOTTED: Wednesday, November 29, 2017 @ 02:37PM

STATE	PROJECT NO.	YEAR	SHEET NO.	TOTAL SHEETS
KANSAS	87 N-0615-01	2017	71	183

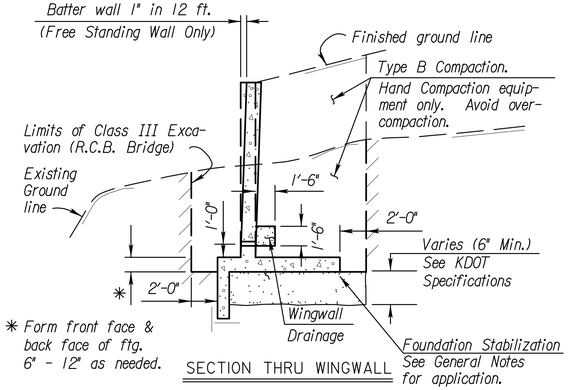

✳ Form front face & back face of ftg. 6" - 12" as needed.

SECTION THRU WINGWALL

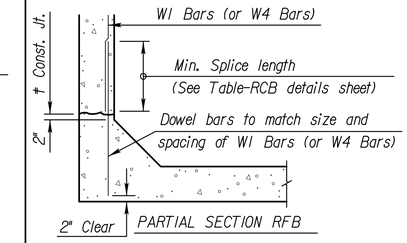

OPTIONAL BAR DETAIL

The Contractor shall have the option of using Dowel Bars to match vertical wall bars as shown, however no allowance will be made for additional steel required for bar laps.

† OPTIONAL COLD JOINT

The Contractor has the option of placing the Lower Horizontal Construction Joint at the top of the slab for RCB's or at the top of the fillet for RFB's

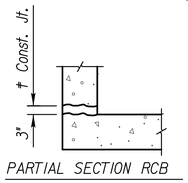

Ø Longitudinal bars shall extend through the joint to provide a minimum lap equal to the required splice length. See RCB Details Sh. for required splice length.

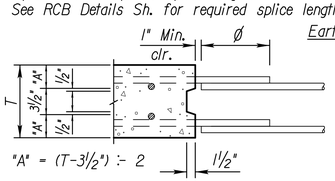

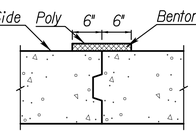

VERTICAL CONSTRUCTION JOINTS

NOTE: Vertical construction joints shall be perpendicular to the longitudinal axis of the RCB and shall be placed at any location as needed for construction and as approved by the Engineer.

NOTE: Horizontal construction joints shall be a roughened finish.

NOTE: Barrel Construction Joints located in a median with less than 5 ft. of fill or at locations specified by the Engineer, shall be protected by a bentonite based system as shown. Place the bentonite on the exterior walls and top slab. See requirements for bentonite in the KDOT Specifications for "Bridge Backwall Protection System". Material and installation of the bentonite system shall be subsidiary to the bid item "Grade 4.0 Concrete".

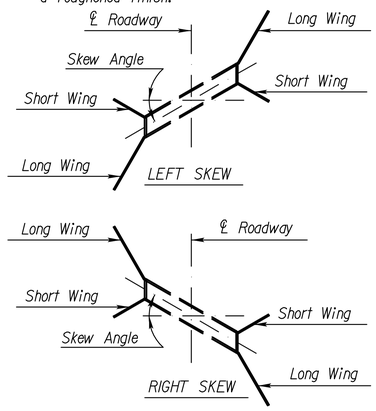

PLAN VIEW SKEWED R.C.B.

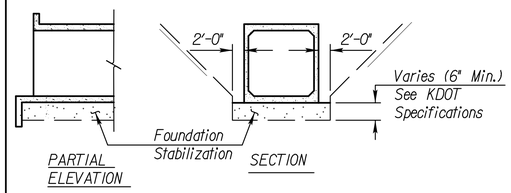

PARTIAL ELEVATION

SECTION

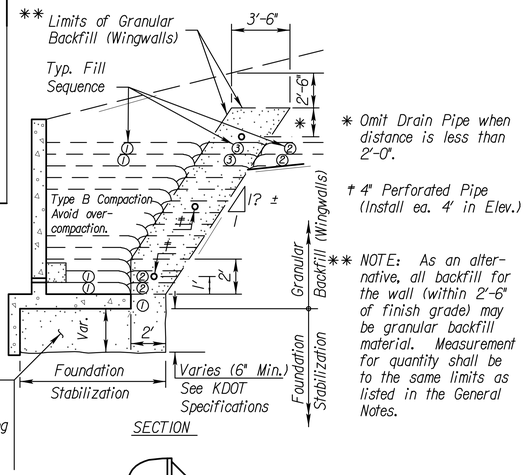

SECTION

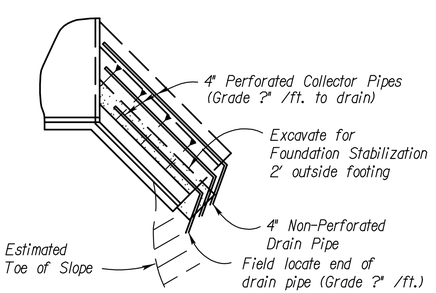

PLAN

GRANULAR BACKFILL AND FOUNDATION STABILIZATION

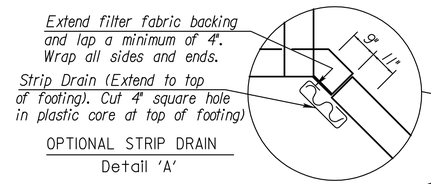

OPTIONAL STRIP DRAIN
Detail 'A'

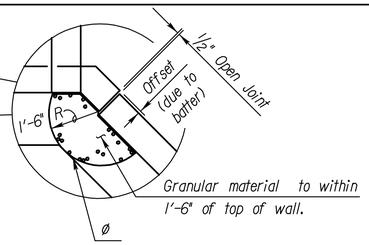

VERTICAL WINGWALL DRAINAGE FOR FREE-STANDING WINGWALLS ONLY

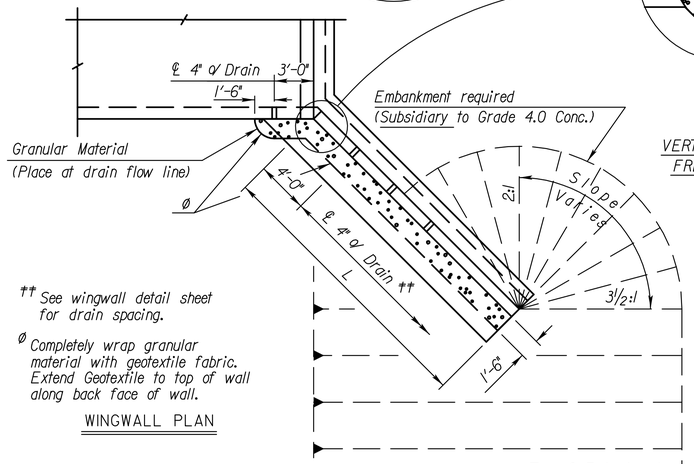

†† See wingwall detail sheet for drain spacing.

Ø Completely wrap granular material with geotextile fabric. Extend Geotextile to top of wall along back face of wall.

WINGWALL PLAN

GENERAL NOTES

Wingwall Drainage:

1. All wingwalls with weepholes shall have horizontal wingwall drainage as shown. Free-standing wingwalls shall also have the vertical wingwall drainage. Strip drains may be used in lieu of aggregate. See KDOT Specifications for "Abutment Strip Drains" for strip drain requirements.
2. Construction and materials for wingwall drainage, including weepholes, geotextile fabric, granular material, and strip drain shall be subsidiary to the bid item, "Grade 4.0 Concrete". Granular material for wingwall drainage shall conform to the requirements of UD-1. Weepholes may be a formed opening or corrugated polyethylene tubing.

Wingwall Foundation Stabilization:

The Foundation Stabilization quantity has been calculated to the limits shown in the Section Thru Wingwall. The depth may be increased by the Engineer. Use Foundation Stabilization on all wingwalls unless founded on rock or granular material.

Seal Course:

1. Seal Course consisting of 3" min. of Commercial Grade Concrete shall be constructed to the limits directed by the Engineer. No reinforcing in the floor of the slab or wall footing shall be placed until the Seal Course has gained sufficient strength to permit working upon it without injury.

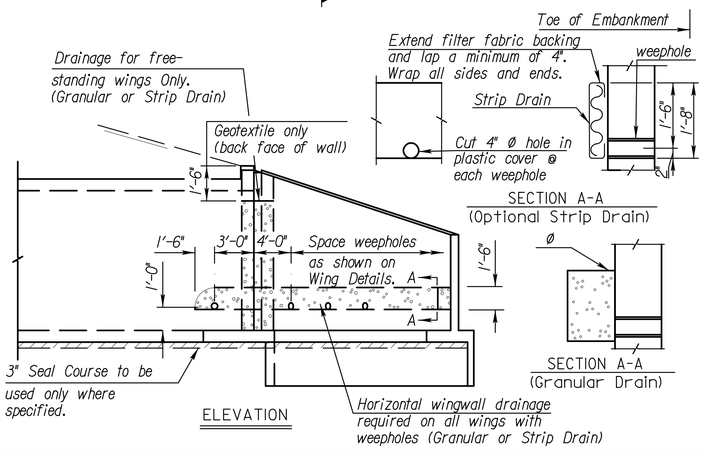

ELEVATION

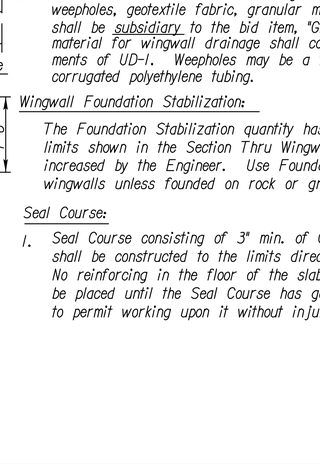

GENERAL NOTES

Foundation Stabilization:

The depth of Foundation Stabilization may be increased by the Engineer. The Contractor may underrun Foundation Stabilization under the barrel if founded on firm material and with the Engineer's approval. Use Foundation Stabilization on all wingwalls unless founded on rock or granular material.

Granular Backfill (Wingwalls):

1. In locations where the material behind the wingwall consist of soils judged as high plasticity clays, fat clays, expansive clays or organic clays, Granular Backfill (Wingwalls) shall be used. Granular Backfill construction may be used separately or combined with Foundation Stabilization as directed by the Engineer.
2. Measurement for the bid item, "Granular Backfill (Wingwalls)", shall be measured in Cubic Yards to the theoretical limits as shown. Drainage pipe, rodent screens, and excavation shall be subsidiary to the bid item, "Granular Backfill (Wingwalls)".
3. Material for Granular Backfill (Wingwalls) shall conform to the requirements of UD-1 or BD-1. Drainage Pipe shall be corrugated polyethylene tubing conforming to KDOT Specifications.

NO.	DATE	REVISIONS	BY	APP'D
3	7/14/08	Change Type 'C' Compaction to 'B'	JPJ	KFH
2	10/6/06	Add Found. Stab. Details and Notes	JPJ	KFH
1	3/2/06	Optional Construction Joint	JPJ	KFH

KANSAS DEPARTMENT OF TRANSPORTATION

RCB AUXILIARY DETAILS

BR020

FHWA APPROVAL		11/01/06	APP'D		KENNETH F. HURST
DESIGNED	RAM	DETAILED	RDR	QUANTITIES	TRACED
DESIGN CK.	RRR	DETAIL CK.	RRR	QUAN.CK.	TRACE CK.

J:\PROJECTS\2014\4010\04290 - CCOW - 127TH E -13TH TO 21ST\05-CIVIL\CAD\BRIDGE\1-1299BR020.DWG

PLOTTED: Wednesday, November 29, 2017 @ 02:37PM

STATE	PROJECT NO.	YEAR	SHEET NO.	TOTAL SHEETS
KANSAS	87 N-0615-01	2017	72	183

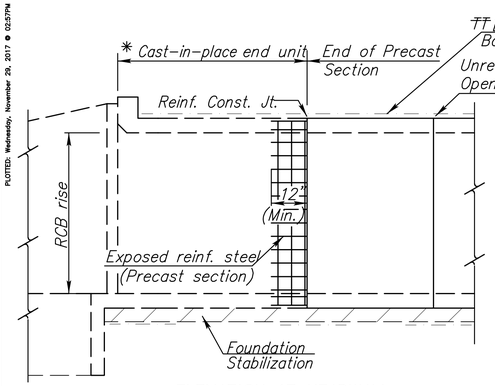

ELEVATION AT HEADWALL

* Minimum barrel length of cast-in-place end unit shall equal the RCB rise or 8'-0", whichever is less. This length can be used when the joint between the cast-in-place end unit and the pre-cast section is reinforced as shown.

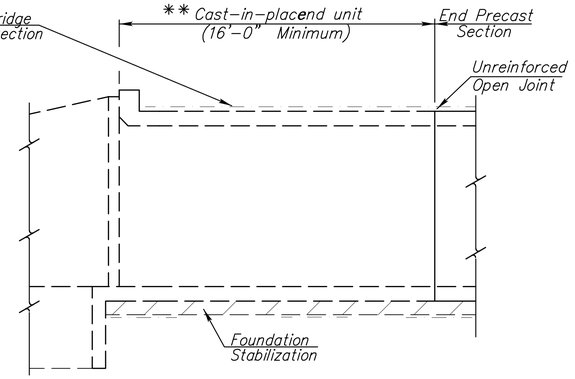

ELEVATION AT HEADWALL

** Minimum barrel length of cast-in-place end unit shall be 16'-0" when using an unreinforced open joint at the end of the precast section.

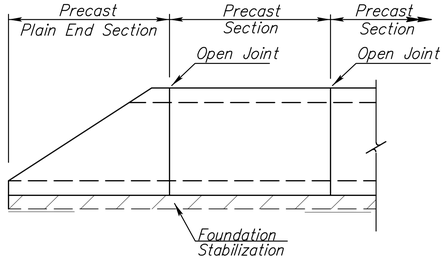

ELEVATION AT PRECAST END SECTION

(Precast End Sections are permitted where straight wings are shown in the plans or at the downstream end for single cell RCB with a rise of six feet or less.)

NOTE: See "Bridge Excavation" sheet, (Std. No. BR100), for excavation details and basis of payment.

NOTE: Minimum length of precast section shall be 4'-0".

NOTE: A single cell box of equivalent area may be substituted for a double cell box with cell spans less than or equal to 6'-0". Any revision in the cell height from that shown on the plans will not be permitted, unless approved by the Engineer. Two single cell boxes may be substituted for a double cell box, when approved by the Engineer.

NOTE: See respective RCB Standard Sheets for cast-in-place details.

NOTE: When the fill height is 2'-0" or less "Bridge Backwall Protection" is required.

GENERAL NOTES

(All Items on this sheet are subsidiary)

PRECAST BOX CULVERTS: If precast boxes are specified, construct them at the locations shown in the plans and according to the requirement shown on this sheet. When approved by the Engineer, precast box culverts may be used in lieu of cast-in-place box culverts. If the Contractor chooses the precast option, use the cast-in-place quantities as the cost basis. This cost includes all labor equipment, material and incidentals necessary to complete the installation.

Unless otherwise approved by the Engineer, use cast-in-place collars at horizontal and vertical changes in RCB alignment. Use cast-in-place end sections and wingwalls except as noted on this sheet. The Engineer may require cast-in-place sections at junctions of drainage structures.

Cast-in-place concrete work shall conform to the requirements of the KDOT Specifications and KDOT's "Guidelines for Structural Design and Detail of Reinforced Concrete Box Culverts'. Use Grade 4.0 concrete and Grade 60 reinforcing steel conforming to ASTM A615 for cast-in-place construction.

Cast-in-place box sections shall have member thicknesses and reinforcement not less than the RCB Standard from the original design. Connections between the cast-in-place and precast members shall be drilled and grouted according to details shown on this sheet. When the wall thicknesses differ between the cast-in-place and precast, transition at a 4:1 without reducing the box opening size. See KDOT Specifications for further requirements.

SPECIFICATIONS: Single-cell Precast Concrete Box Culverts shall conform to the requirements of the following specifications except as noted in the KDOT Specifications. Design multiple-cell precast boxes in accordance with the criteria used to develop the single-cell precast boxes. (See Appendix of ASTM Specification C 1577-08, Table 2 and the latest AASHTO LRFD Specifications.)

DISTRIBUTION SLAB: Fill heights less than 2 feet require a distribution slab. Construct the distribution slab over the width of the exterior walls of the barrel to the outside edges of the roadway shoulders. Terminate the slab a minimum of 2 feet from the edge of a barrel segment.

If the fill height is less than or equal to one foot then:

A distribution slab shall be a minimum of 6 inches thick, reinforced with #4 bars spaced at 18 inches, placed perpendicular to centerline of the box and with #5 bars spaced at 12 inches, placed parallel to centerline of the box. Substitution of an equivalent welded wire fabric is acceptable. Place a min. of 3" of granular material between the box and slab.

If the fill height is greater than one foot then:
(Use one of the following options)

1) Use the cast-in-place criteria above.
2) Use precast distribution slabs with same criteria as the cast-in-place above. Center the joints in slabs over the box segments. Provide a minimum of 3 inches of granular material between the box and the slabs.
3) Reinforced concrete pavement (min. 6 inches thick) will meet the requirements of a distribution slab. Reinforce as noted above. Provide a minimum of 3 inches of granular material between the concrete pavement and the precast boxes.
4) Asphalt pavement (min. 6 inches thick) will meet the requirements of a distribution slab. Provide a minimum of 6 inches of granular material between the asphalt and the precast boxes. Also provide geogrid with 4" of cover to the asphalt within the granular material.

A special design will be required when the above options are not geometrically possible.

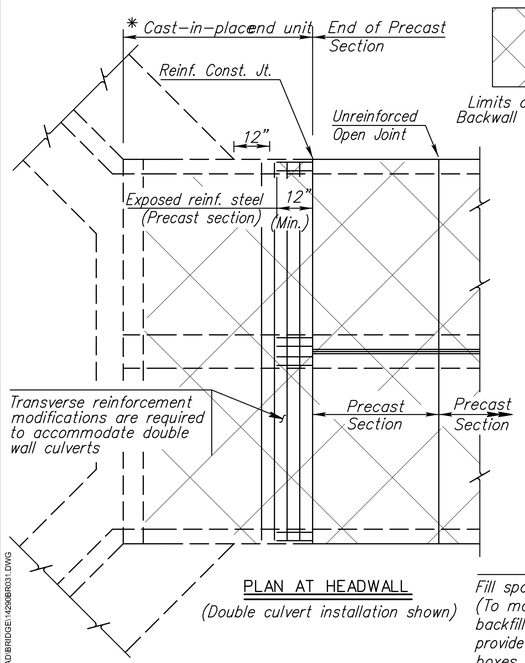

PLAN AT HEADWALL

(Double culvert installation shown)

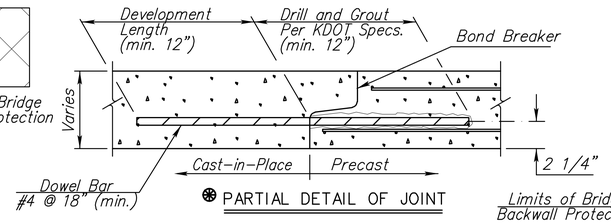

❁ PARTIAL DETAIL OF JOINT

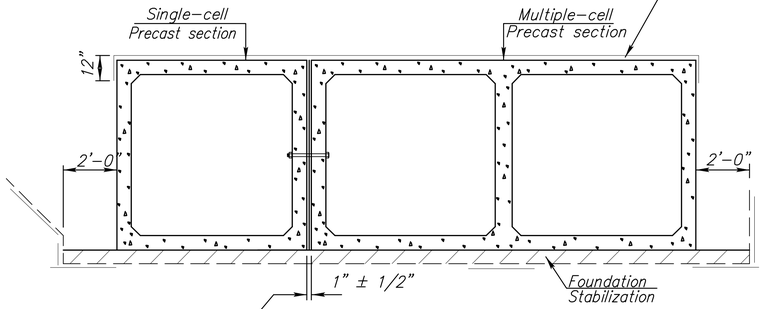

❁ Bridge Backwall Protection not shown for clarity

TYPICAL INSTALLATION DETAILS

Fill space between boxes with grout. (To maintain proper joint gap, partially backfill boxes prior to grouting or provide a mechanical connection between boxes.)

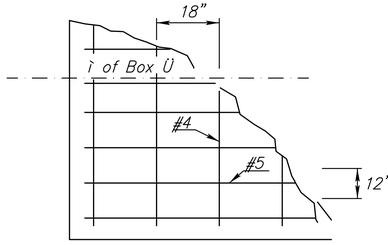

CAST IN PLACE DISTRIBUTION SLAB

(Partial plan of reinforcement)

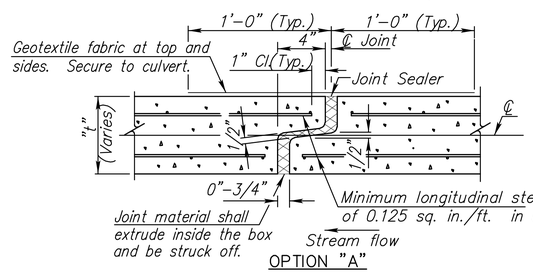

OPTION "A"

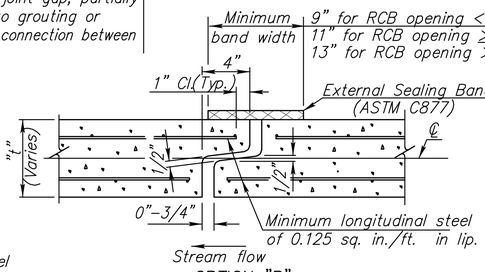

OPTION "B"

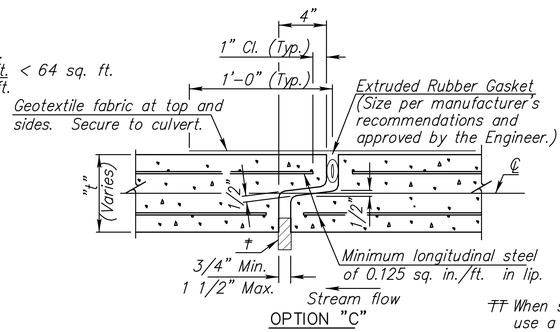

OPTION "C"

† Insert temporary, 3/4"-1" wide, hardwood wedges to prevent over-compressing gasket.

❁ OPEN JOINT DETAIL

TT When shown on the shop details use a Bridge Backwall Protection conforming to Section 1700 of the KDOT Specifications.

NO.	DATE	REVISIONS	BY	APP'D
5	08-19-13	Edit Geogrid Placement	JPJ	TLF
4	07-28-11	Added Bridge Backwall Protection	JPJ	KFH
3	03-10-10	Clarification of Extension	JPJ	KFH
2	12-03-09	Revised ASTM / Added Note	JPJ	LRR
1	4-07-09	Clarified Distribution Slab	RAM	KFH

KANSAS DEPARTMENT OF TRANSPORTATION

PRECAST CONCRETE BOX CULVERT DETAILS

BR031

FHWA APPROVAL	9-20-11	APP'D	KENNETH F. HURST
DESIGNED	DETAILED PF	QUANTITIES	CADD
DESIGN CK.	DETAIL CK. RAM	QUAN.CK.	CADD CK.

J:\PROJECTS\2014\1401040290 - COV_127TH E 13TH TO 21ST\05-CIVIL\CAD\BRIDGE\142906R031.DWG

PLOTTED: Wednesday, November 29, 2017 @ 05:37PM

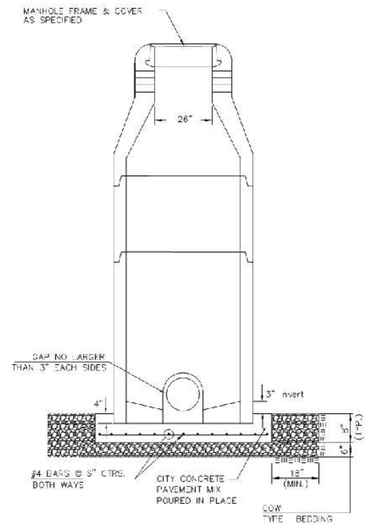

DOG HOUSE MANHOLE
(OVER EXISTING PIPE)
Not to Scale

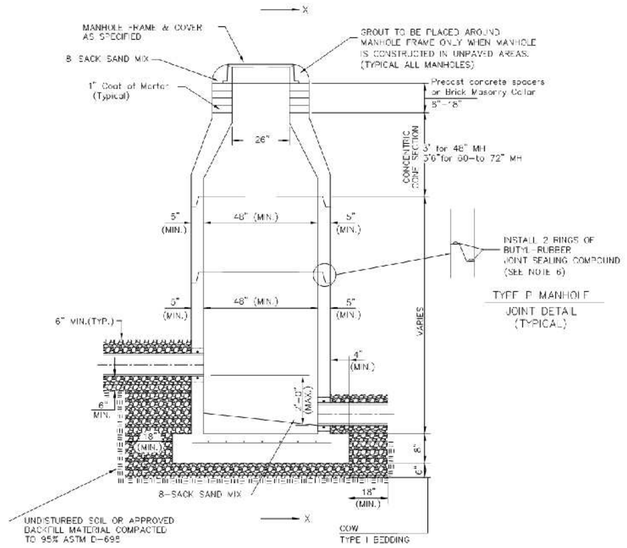

STANDARD MANHOLE
Not to Scale

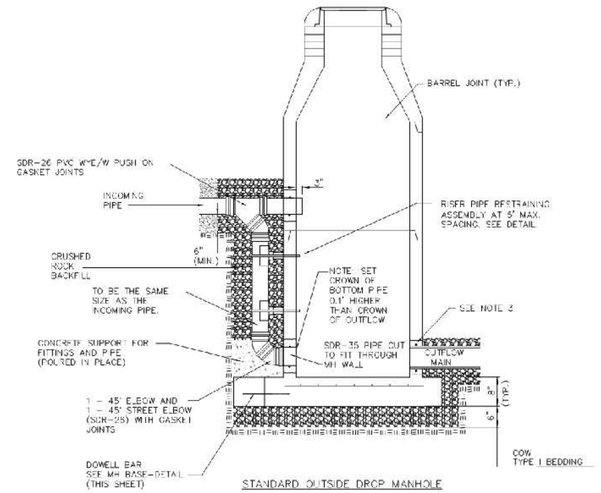

STANDARD OUTSIDE DROP MANHOLE
Not to Scale

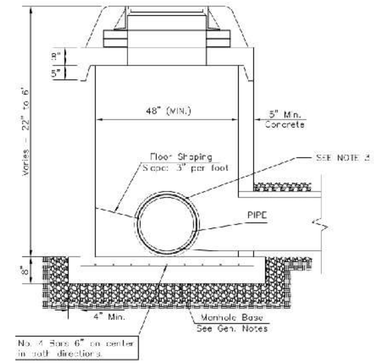

SHALLOW MANHOLE
Not to Scale

= COW TYPE I BEDDING = UNDISTURBED SOIL

PRECAST MANHOLE GENERAL NOTES

1. ALL PRECAST CONCRETE MANHOLE SECTIONS SHALL CONFORM TO THE LATEST REVISIONS OF A.S.T.M. C478 AS MODIFIED BY THE SPECIFICATIONS.
2. NON-SHRINK GROUT SHALL BE NON-METALLIC TYPE.
3. APPROVED FLEXIBLE WATERSTOP SHALL BE INSTALLED TO JOIN THE SEWER PIPE TO THE MANHOLE WALL. THE SEWER PIPE SHALL BE SUPPORTED WITH CRUSHED ROCK A MINIMUM OF 3 FEET FROM THE MANHOLE WALL AND TO THE FIRST JOINT FOR V.C.P. SUCH THAT THE JOINT REMAINS FLEXIBLE.
4. ALL INSIDE SURFACES OF THE CONCRETE MANHOLE WHICH WOULD BE EXPOSED TO SEWER GAS SHALL BE COATED PER SECTION 804.4 OF STANDARD SPECIFICATIONS.
5. EXTERIOR MANHOLE WALLS SHALL BE COATED PER SECTION 804.4 OF STANDARD SPECIFICATIONS.
6. JOINT SEALING COMPOUND SHALL BE PER 804.4 OF STANDARD SPECIFICATIONS.
7. ALL MANHOLE SECTION JOINTS THAT WILL BE IN GROUNDWATER OR GREATER THAN 12' DEEP SHALL BE WRAPPED WITH AN EXTERNAL JOINT SEAL PER SECTION 804.4 OF STANDARD SPECIFICATIONS AS INDICATED BY THE PLANS.
8. PRECAST MANHOLES SHALL BE SET AT LEAST 4 INCHES INTO THE MANHOLE BASE FOR DOG HOUSE MANHOLES.
9. TOP OF MANHOLE FLOOR SLAB SHALL BE AT LEAST 3 INCHES BELOW THE FLOW LINE OF THE OUTLET PIPE TO INSURE SUFFICIENT MINIMUM THICKNESS OF SHAPED INVERT.
10. LIFTING HOLES SHALL BE FILLED WITH NON-SHRINK GROUT AND THE INTERIOR SURFACE COATED AS SPECIFIED.
11. MORTAR USED IN MASONRY CONSTRUCTION SHALL CONTAIN 8 SACKS OF CEMENT PER CUBIC YARD. CONCRETE USED IN MANHOLE BASES SHALL CONFORM TO THE REQUIREMENTS OF CONCRETE FOR CONCRETE PAVEMENT CONSTRUCTION AS SPECIFIED IN THE CITY STANDARD PAVING SPECIFICATIONS USING CITY CONCRETE PAVEMENT MIX WITHOUT AIR ENTRAINING ADMIXTURE. MORTAR SHALL BE PLACE AROUND THE MANHOLE RING AS SHOWN ON THE DRAWINGS WHEN MANHOLES ARE CONSTRUCTED IN UNPAVED AREAS. COMPLETED MANHOLE SHALL BE WITHOUT LEAKS AND WATER TIGHT.
12. REINFORCING STEEL SHALL BE INSTALLED IN THE MANHOLE BASES AND SHALL CONSIST OF NO.4 BARS PLACED ON 6" CENTERS IN BOTH DIRECTIONS. THE MANHOLE BASE REINFORCEMENT SHALL BE PLACED AT LEAST 3" ABOVE THE BOTTOM OF THE MANHOLE BASE. ALL COSTS FOR FURNISHING AND INSTALLING REINFORCING STEEL SHALL BE INCLUDED IN THE UNIT PRICE BID FOR THE MANHOLE.
13. WALL THICKNESS SHALL BE 1" GREATER THAN MANHOLE DIAMETER IN FEET.
14. OPENINGS SHALL BE CORE DRILLED INTO THE MANHOLE WALL WHEN OUTSIDE DROPS ARE CONSTRUCTED ON EXISTING MANHOLES. SUCH OPENINGS DRILLED INTO EXISTING MANHOLES SHALL BE AS SMALL AS PRACTICAL TO FACILITATE INSTALLING AND GROUTING THE NEW PIPE IN PLACE. WATERSTOP GASKETS SHALL BE USED WITH P.V.C. PIPE. THE NEW PIPE SHALL BE GROUTED INTO THE OPENING USING AN APPROVED NONSHRINK GROUT FOR THE FULL MANHOLE WALL THICKNESS. THE EXTERIOR OF THE COMPLETED CONNECTION SHALL BE SEALED WITH AN APPROVED BITUMINOUS COATING SUCH THAT THE CONNECTION WILL BE WATER TIGHT. FLOOR OF MANHOLE SHALL BE MODIFIED TO FORM NEW FLOW CHANNEL FOR THE NEW CONNECTION AS INDICATED BY THE DRAWING. THIS WORK, INCLUDING MODIFICATION OF MANHOLE FLOOR, SHALL BE PAID FOR AT THE UNIT PRICE BID FOR OUTSIDE DROP STACK CONSTRUCTED ON EXISTING MANHOLE.
15. THE FLOORS OF ALL MANHOLES SHALL BE SHAPED WITH FLOW CHANNELS SUCH THAT THE MANHOLES WILL BE SELF CLEANING AND FREE OF AREAS WHERE SOLIDS COULD BE DEPOSITED AS SEWAGE FLOWS THROUGH THE MANHOLE FROM ALL INLET PIPES TO THE OUTLET PIPE. FLOW CHANNELS SHALL BE FORMED TO MATCH THE BOTTOM HALVES OF THE IN-FLOWING PIPES AND THE OUTFLOWING PIPE AS SHOWN BY THE DRAWINGS. MANHOLE FLOORS SHALL HAVE SLOPES OF 3 INCHES PER FOOT IN THE AREAS OUTSIDE OF THE FLOW CHANNELS SLOPED TOWARD THE FLOW CHANNELS. PIPES LAID THROUGH MANHOLES SHALL HAVE THE TOP HALF REMOVED TO NEAT LINES FOR THE FULL INSIDE DIAMETER OF THE MANHOLE. MANHOLE FLOORS SHALL THEN BE SHAPED AROUND THE BOTTOM HALF OF THE PIPE WHICH FORMS THE FLOW CHANNEL.
16. MANHOLE COVER CASTINGS AND MANHOLE FRAME CASTINGS SHALL CONFORM TO THE REQUIREMENTS AS INDICATED IN THE STANDARD SPECIFICATIONS AND AS SHOWN IN THE STANDARD DETAIL DRAWING.
17. THE VERTICAL DROP IN STANDARD MANHOLES SHALL NOT EXCEED 2' REGARDLESS OF PIPE SIZE. THE CROWNS OF INFLOWING PIPES SHALL NEVER BE SET LOWER THAN THE CROWN OF THE OUTFLOWING PIPE.
18. STANDARD MANHOLES SHALL BE BID AS STANDARD MANHOLES FOR THE TYPE AND DIAMETER INDICATED. OUTSIDE DROP MANHOLES SHALL BE BID AS STANDARD OUTSIDE DROP MANHOLES FOR THE TYPE AND DIAMETER INDICATED. ALL MANHOLE DIAMETERS WILL BE 4' UNLESS INDICATED OTHERWISE.
19. PRECAST CONCRETE SPACERS OR BRICK MASONRY COLLAR SHALL BE INSTALLED BETWEEN THE CAST IRON FRAME AND THE CONCENTRIC CONE. THE COLLAR WILL HAVE 8" WALLS AND A VERTICAL HEIGHT OF 5" MINIMUM AND 18" MAXIMUM. A 1" COAT OF MORTAR WILL BE PLASTERED ON THE OUTSIDE OF THE COLLAR. THE USE OF PRE-CAST CONCRETE SPACERS FOR MANHOLE TOP ADJUSTMENT IS ALSO ALLOWED.
20. THE FULL DIAMETER OF THE MANHOLE SHALL EXTEND THE ENTIRE DEPTH OF THE MANHOLE TO THE CONE SECTION. NO REDUCTION IN MANHOLE DIAMETER WILL BE ALLOWED.

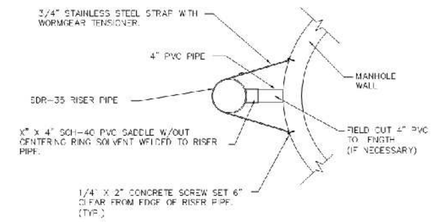

RISER PIPE RESTRAINING ASSEMBLY
Not to Scale

SANITARY SEWER MANHOLE DIAMETERS

DIAMETER	DEPTH	PIPE SIZE
4'	0'-15'	8"-18"
5'	>15'-30'	2"" 30"
6'	>30'	36"-60"

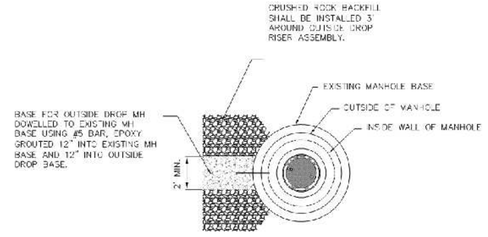

MH BASE DETAIL
Not to Scale

REVISION APRIL 2017	REMOVED CLEANOUT ON OUTSIDE DROP MANHOLE

CITY OF WICHITA
PUBLIC WORKS & UTILITIES
ENGINEERING DIVISION

PRECAST SANITARY SEWER MANHOLE

CITY ENGINEER
GARY JANZEN, P.E.

PROJECT NUMBER	OCA NUMBER	DATE
472-85158	707065	

CITY ENGINEER'S OFFICE
CITY HALL - SEVENTH FLOOR
455 NORTH MAIN STREET
WICHITA, KANSAS 67202-1620
(316) 268-4501

SHEET
73 OF 183

SS-101
Sh. No. 73

J:\PROJECTS\2014\140104290 - COW_127TH E 13TH TO 21ST\05-CIVIL\CAD\SAN\14290SS-101.DWG

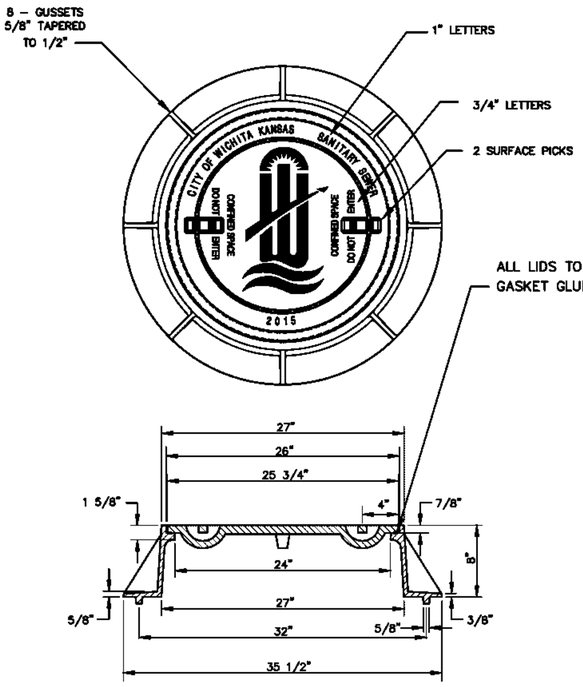

STANDARD MANHOLE FRAME & COVER

DEETER #1261 OR EJIW #1936–Z1

NOTE:

1. FURNISHED WITH MACHINED HORIZONTAL BEARING SURFACE.

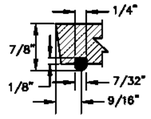

O–RING DETAIL

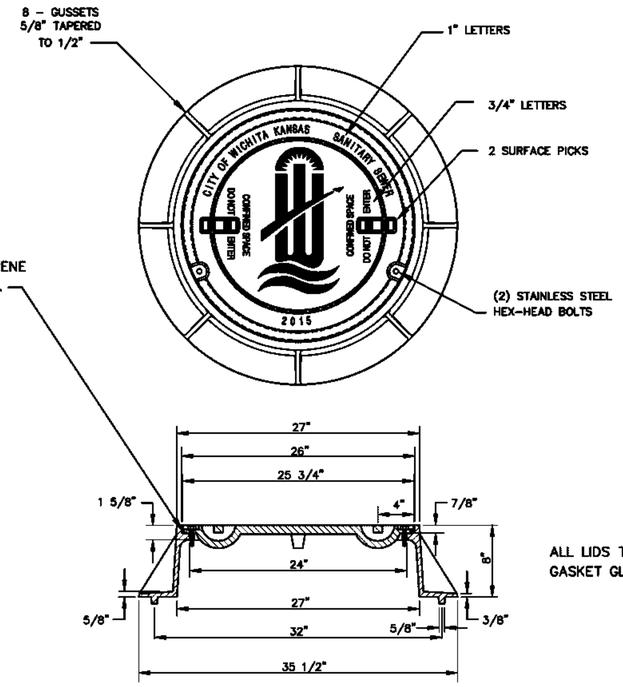

BOLT DOWN MANHOLE FRAME & COVER

DEETER #1261 OR EJIW #1936–Z1

NOTE:

1. FURNISHED WITH MACHINED HORIZONTAL BEARING SURFACE.

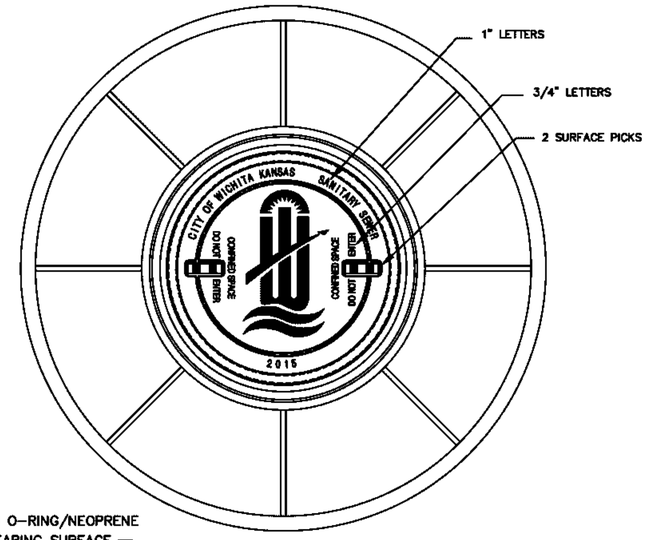

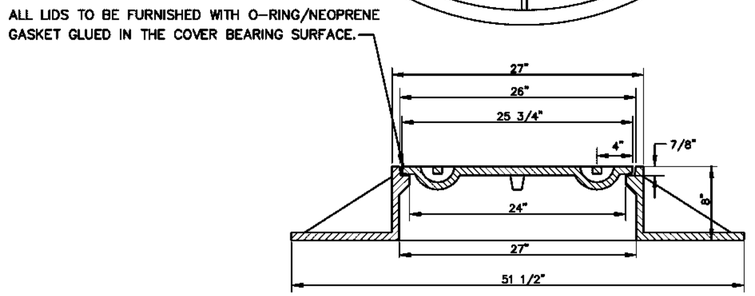

WIDE FLANGED FRAME & COVER

DEETER #1261A

NOTE:

1. FURNISHED WITH MACHINED HORIZONTAL BEARING SURFACE.

GENERAL NOTES

1. MANHOLE CASTINGS SHALL BE MANUFACTURED USING GOOD QUALITY GRAY IRON CONFORMING TO CLASS 30 OF A.S.T.M. DESIGNATION A–48. DIMENSIONS SHOWN ON THE DETAILED DRAWINGS SHALL BE CONSIDERED AS MINIMUM REQUIREMENTS AND ANY DEVIATIONS FROM THE DIMENSIONS SHOWN MUST BE SPECIFICALLY APPROVED. THE FINISHED CASTINGS SHALL BE OF UNIFORM QUALITY, FREE FROM BLOWHOLES, POROSITY, HARD SPOTS, SHRINKAGE DISTORTIONS OR OTHER DEFECTS.

2. MANHOLE CASTINGS SHALL BE MANUFACTURED SUCH THAT A COVER MANUFACTURED BY ANY ONE FOUNDARY WILL FIT INTERCHANGEABLY INTO A FRAME MANUFACTURED BY ANOTHER FOUNDRY AND STILL MEET ALLOWABLE CLEARANCES AND NON–ROCKING REQUIREMENTS. THIS WILL REQUIRE MANUFACTURING OF THE MATCHING FACES ON THE COVER AND THE FRAME TO CLOSE TOLERANCES.

3. THE OUTSIDE CIRCUMFERENCE OF THE VERTICAL FACE OF THE COVER AND THE INSIDE CIRCUMFERENCE OF THE VERTICAL FACE IN THE FRAME RECESS SHALL BE MANUFACTURED TO TOLERANCES SUCH THAT THE CLEARANCE BETWEEN THE COVER AND FRAME WILL NOT EXCEED 1/8" AT ANY POINT AROUND THE CIRCUMFERENCE OF THE COVER. THE SEATING SURFACES BETWEEN THE COVER AND FRAME SHALL BE MACHINED SUCH THAT THESE SEATING SURFACES SHALL MAKE FULL CONTACT FOR THEIR FULL CIRCUM–FERENCE TO PRECLUDE THE COVER FROM ROCKING IN THE FRAME.

4. THE MANHOLE FRAME AND COVER SHALL BE MARKED WITH LETTERING INDICATING THE NAME OF THE MANUFACTURER AND THE YEAR WHEN THE COVER OR FRAME WAS CAST. THE COVER SHALL BE FURTHER IDENTIFIED WITH REGARDS TO OWNERSHIP USING LETTERS AT LEAST 1"IIN HEIGHT. THIS IDENTIFICATION SHALL BE "CITY OF WICHITA SANITARY SEWER".
THE TOP SURFACE OF THE COVER SHALL BE MANUFACTURED IN WITH CITY OF WICHITA DESIGN AS INDICATED ON THE DRAWINGS. SMOOTH BLOCKOUTS SHALL BE UTILIZED TO HIGHLIGHT THE LETTERING ON THE COVER SURFACE. THE TOTAL AREA OF SMOOTH SURFACE BLOCKOUT SHALL NOT EXCEED THE AREA AS INDICATED ON THE DRAWING. POSITIONING OF SMOOTH BLOCKOUTS AND LETTERING MAY VARY FROM THAT SHOWN ON THE DETAILED DRAWING.

REVISED: MARCH 2016

CITY OF WICHITA
PUBLIC WORKS & UTILITIES
ENGINEERING DIVISION

MANHOLE FRAME AND COVER (SANITARY SEWER)

CITY ENGINEER
GARY JANZEN, P.E

PROJECT NUMBER	OCA NUMBER	DATE
472-85158	707065	

CITY ENGINEER'S OFFICE
CITY HALL - SEVENTH FLOOR
455 NORTH MAIN STREET
WICHITA, KANSAS 67202-1620
(316) 268-4501

SHEET
74 OF 183

SS-102
Sh. No. 74

PLOTTED: Wednesday, November 29, 2017 @ 02:58PM

STATE	PROJECT NO.	YEAR	SHEET NO.	TOTAL SHEETS
KANSAS	87 N-0615-01	2017	75	183

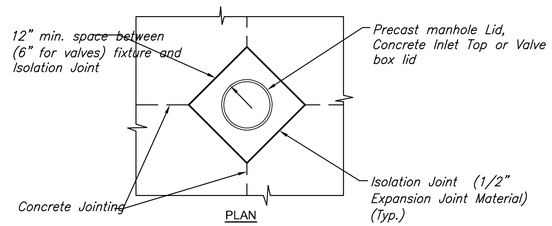

UTILITY BOX-OUT DETAILS

NOTE

Contractor shall construct box-outs around all surface utility fixtures, as shown, when fixtures fall on or near concrete joints, or as directed by the Engineer. all other fixtures shall have an isolation joint or bond breaker between them and concrete pavement. cost shall be subsidiary.

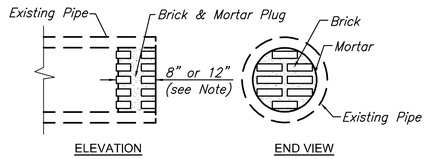

PIPE PLUGGING DETAIL

NOTES

Pipe plugs shall be constructed of brick masonry, with construction requirements and materials conforming to the same requirements as specified for a masonry construction in the standard specifications pipes having diameters of 18" or smaller shall be plugged with 8" thick plug. pipes having diameters larger than 18" shall be plugged with 12" thick plug. The construction of pipe plugs shall not be paid for directly, but shall be considered subsidiary to pipe installation.

The contractor may use other methods to plug existing pipe if approved by the Project Engineer.

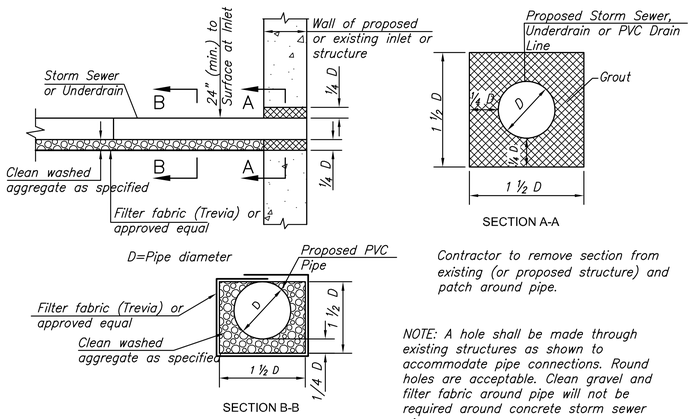

Contractor to remove section from existing (or proposed structure) and patch around pipe.

NOTE: A hole shall be made through existing structures as shown to accommodate pipe connections. Round holes are acceptable. Clean gravel and filter fabric around pipe will not be required around concrete storm sewer pipe.

PIPE CONNECTION DETAIL

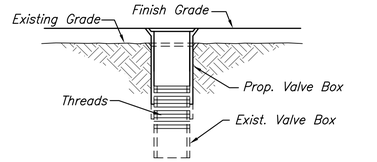

Valve Adjustment Shall Be Paid As "Valve Box Adjusted."

WATER VALVE BOX ADJUSTMENT DETAIL

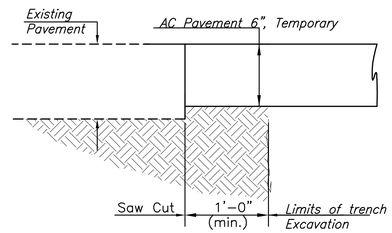

TEMPORARY PAVEMENT PATCH

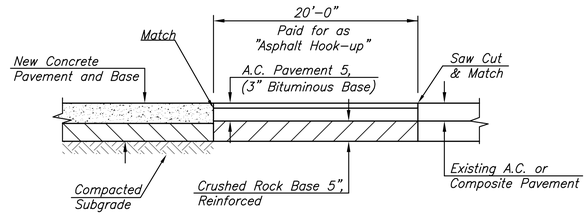

ASPHALT HOOKUP DETAIL

The bid item "Asphalt Hookup" shall include pavement removal., grading, rock base, geogrid, and A.C. Pavement as shown. Curb and Gutter is paid for separately.

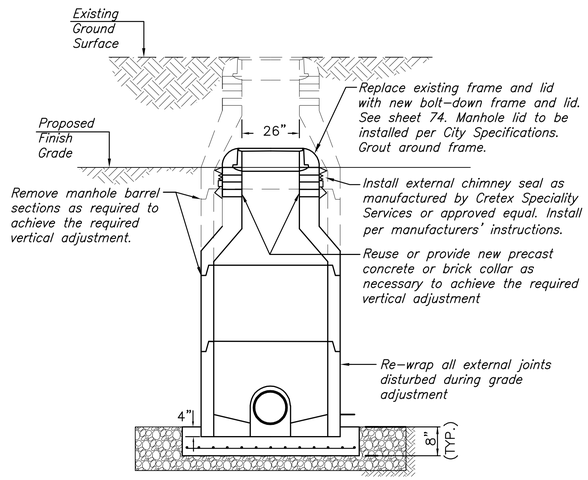

MANHOLE ADJUST, SPECIAL

Notes:

1. *Reseal internally per City Standard Specification to provide a seamless interior surface.*
2. *If new barrel sections are added, they shall be coated and installed in accordance with City Standard Specifications.*

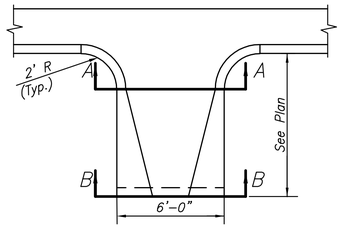

GUTTER FLUME PLAN

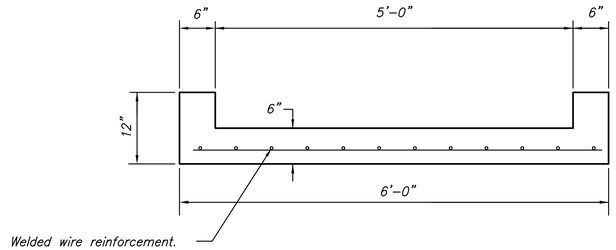

SECTION A-A

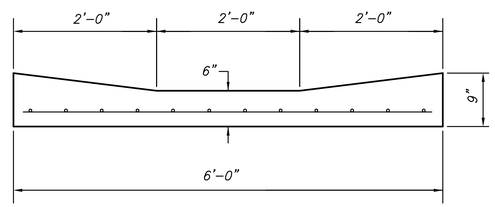

SECTION B-B

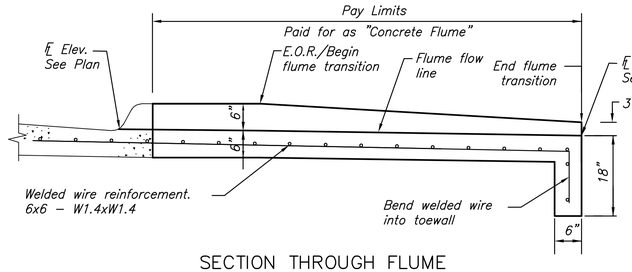

SECTION THROUGH FLUME

Note: See cross-sections for ditch grading.

GUTTER FLUME DETAIL

MKEC
Wichita, KS • 316-684-9600

STREET IMPROVEMENTS FOR

127TH STREET EAST

FROM 13TH STREET NORTH TO 21ST STREET NORTH

©2017
MKEC Engineering
All Rights Reserved
www.mkec.com
These drawings and their contents, including, but not limited to, all concepts, designs, & ideas are the exclusive property of MKEC Engineering (MKEC), and may not be used or reproduced in any way without the express consent of MKEC.

MISCELLANEOUS DETAILS

PROJECT NO.	472-85158
DATE	11/29/17
SCALE	NTS

DESIGNED	DRAWN	CHECKED
JRA	LES	JRA

NO.	REVISION	DATE

SHEET NO.

75 OF 183

Sh. No. 75

J:\PROJECTS\2014\1401040290 - CON_127TH E. 13TH TO 21ST\05-CIVIL\CAD\SAN\1429DED01.DWG

PLOTTED: Wednesday, November 29, 2017 @ 02:58PM

STATE	PROJECT NO.	YEAR	SHEET NO.	TOTAL SHEETS
KANSAS	87 N-0615-01	2017	76	183

BM#2 Chiseled square top of curb in front of a FH at the northwest cor. of 127th street North & Birchwood Dr.
Sta. 17+34.47, 54.79' Lt., Elev.=1342.27 (NAVD 88)

SCALE: 1"=30'
0 30 60

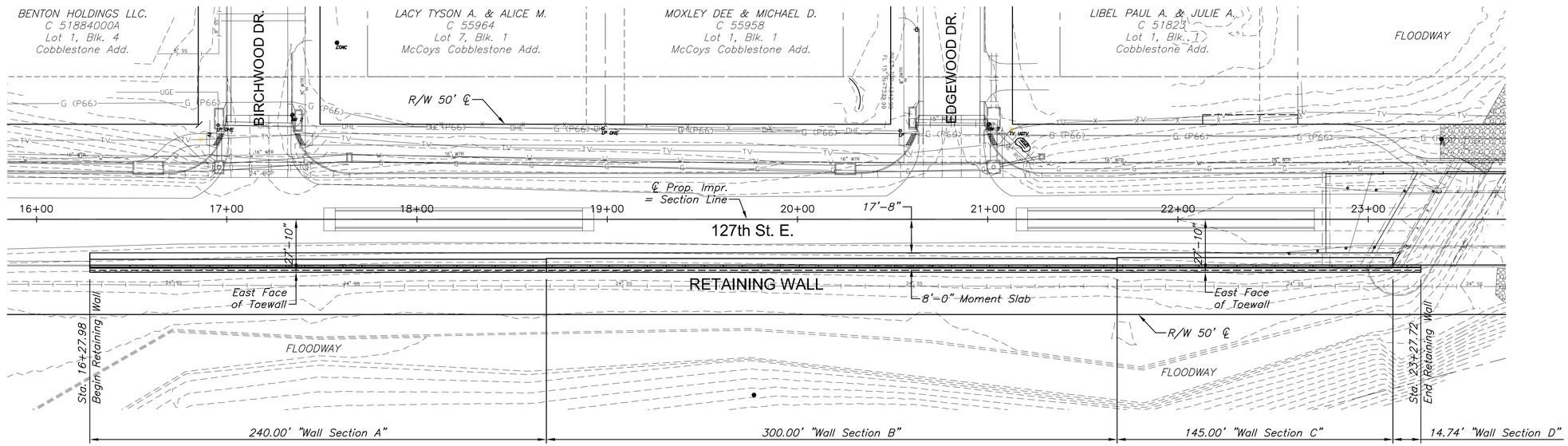

NOTE:
See Sh. No. 77 for Retaining Wall Sections and Moment Slab Details.

PLAN RETAINING WALL
PROFILE RETAINING WALL

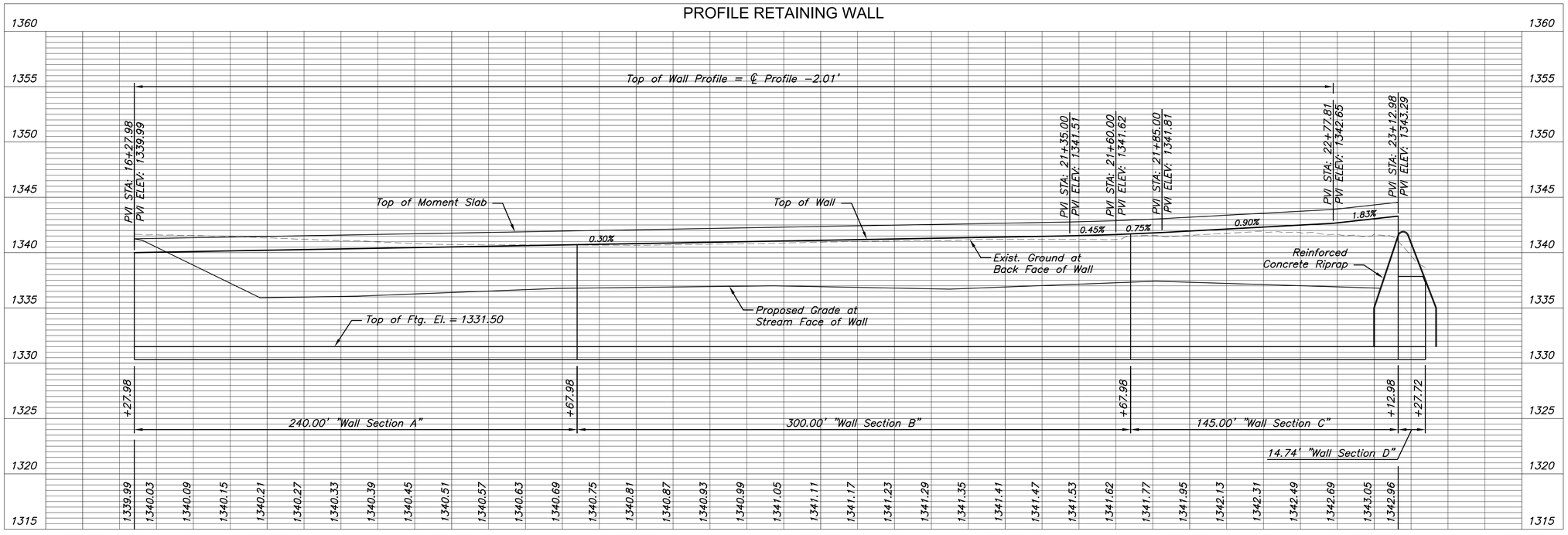

MKEC
Wichita, KS • 316-684-9600

STREET IMPROVEMENTS FOR

127TH STREET EAST

FROM 13TH STREET NORTH TO 21ST STREET NORTH

©2017
MKEC Engineering
All Rights Reserved
www.mkec.com
These drawings and their contents, including, but not limited to, all concepts, designs, & ideas are the exclusive property of MKEC Engineering (MKEC) and may not be used or reproduced in any way without the express consent of MKEC.

RETAINING WALL PLAN & PROFILE

PROJECT NO.	472-85158
DATE	11/29/17
SCALE	1"=30'

DESIGNED	DRAWN	CHECKED
KJS	DMU	KJS

NO.	REVISION	DATE

SHEET NO.

76 OF 183

Sh. No. 76

J:\PROJECTS\2013\140194209 - COW_127TH E 13TH TO 21ST\05-CIVIL\CAD\WALL\142909WP01.DWG

PLOTTED: Wednesday, November 29, 2017 @ 02:59PM

STATE	PROJECT NO.	YEAR	SHEET NO.	TOTAL SHEETS
KANSAS	87 N–0615–01	2017	77	183

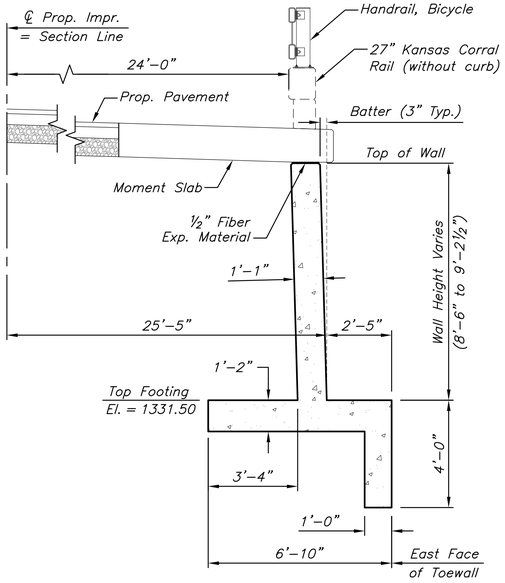

WALL SECTION A

(Looking Up Station)

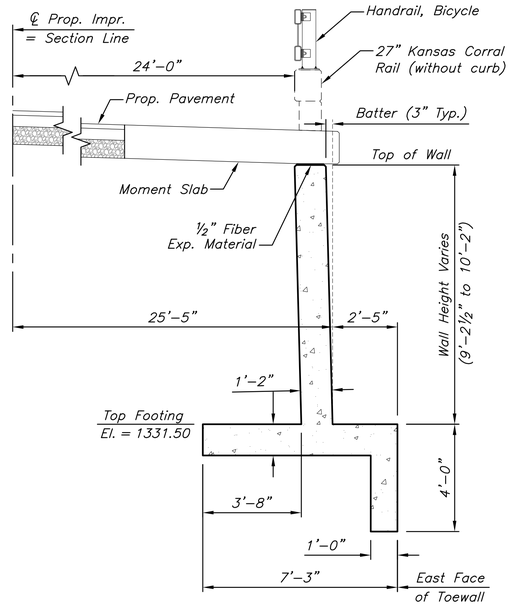

WALL SECTION B

(Looking Up Station)

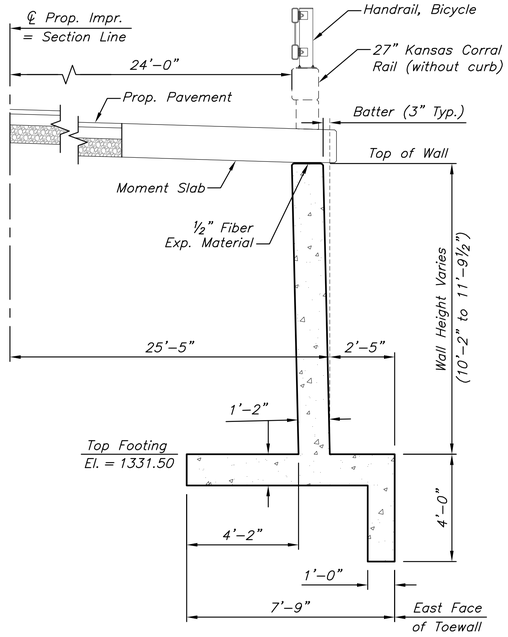

WALL SECTION C

(Looking Up Station)

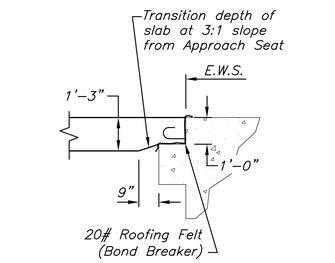

SECTION A-A

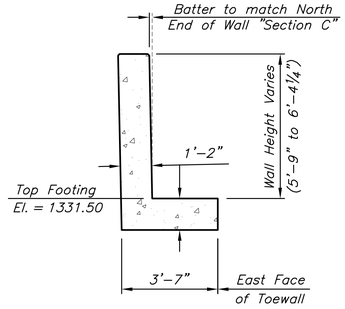

WALL SECTION D

(Looking Up Station)

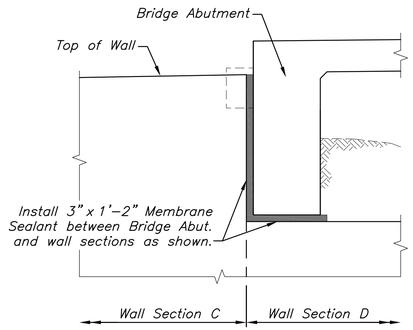

WALL TO BRIDGE JOINT

(Looking West at East Face of Retaining Wall)

<u>NOTE:</u>
Membrane Sealant shall be in compliance with KDOT Standard Specifications. Materials, labor, and equipment for this work shall be considered <u>subsidiary</u> to the bid item "Retaining Wall".

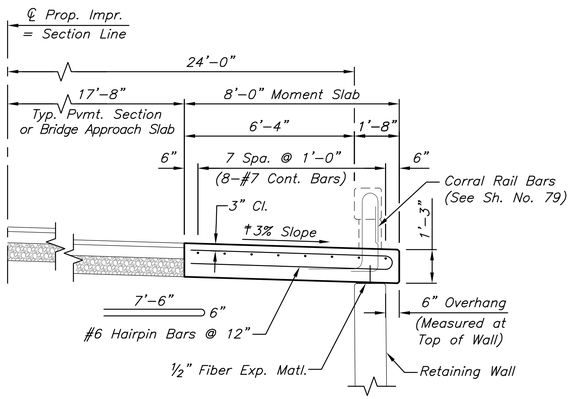

TYPICAL SECTION - MOMENT SLAB

(Looking Up Station)

† Transition from 3% at Sta. 22+77.81 to 1.6% at Sta. 23+12.98 (Adjacent to Bridge Approach Slab)

<u>NOTE:</u>
Handrail, Bicycle not shown for clarity.

MOMENT SLAB NOTES

<u>UNIT STRESSES:</u>

Concrete	$f'c$ = 4 ksi
Reinforcing Steel (Epoxy-Coated)	f_y = 60 ksi

1. *See Sh. No. 76 for Retaining Wall Plan and Profile.*
2. *See Sh. No. 78 for General Notes, reinforcing details of Retaining Wall, and quantities.*
3. *See Sh. No. 79 for Corral Rail details.*
4. *See Sh. No. 80 for Handrail, Bicycle.*

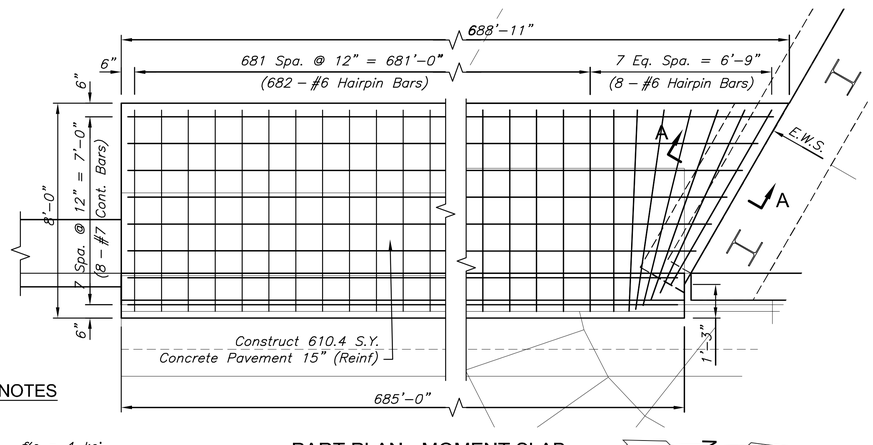

PART PLAN - MOMENT SLAB

All materials, labor, and equipment required for the construction of Moment Slab shall be considered <u>subsidiary</u> to the bid item "Concrete Pavement 15" (Reinf)". The minimum splice length for #7 Cont. Bars shall be 3'–0".

MKEC
Wichita, KS • 316-684-9600

STREET IMPROVEMENTS FOR

127TH STREET EAST

FROM 13TH STREET NORTH TO 21ST STREET NORTH

©2017
MKEC Engineering
All Rights Reserved
www.mkec.com
These drawings and their contents, including, but not limited to, all concepts, designs, & ideas are the exclusive property of MKEC Engineering (MKEC), and may not be used or reproduced in any way without the express consent of MKEC.

RETAINING WALL AND MOMENT SLAB DETAILS

PROJECT NO.	472-85158
DATE	11/29/17
SCALE	3/8"=1'

DESIGNED	DRAWN	CHECKED
KJS	DMU	KJS

NO.	REVISION	DATE

SHEET NO.

77 OF 183

Sh. No. 77

J:\PROJECTS\2014\1401040290 - COV_127TH E 13TH TO 21ST\05-CIVIL\CAD\WALL\14290WD01.DWG

PLOTTED: Wednesday, November 29, 2017 @ 03:00PM

STATE	PROJECT NO.	YEAR	SHEET NO.	TOTAL SHEETS
KANSAS	87 N–0615–01	2017	78	183

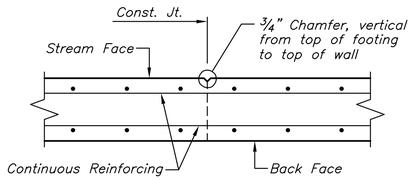

TYPICAL CONSTRUCTION JOINT

Construction Joints are optional with the Contractor. If used, place the joints only at locations approved by the Engineer prior to construction.

NOTE:
All previously cast concrete surfaces shall be prepared per the "PREPARATION OF EXISTING CONCRETE" note on Sh. No. 81.

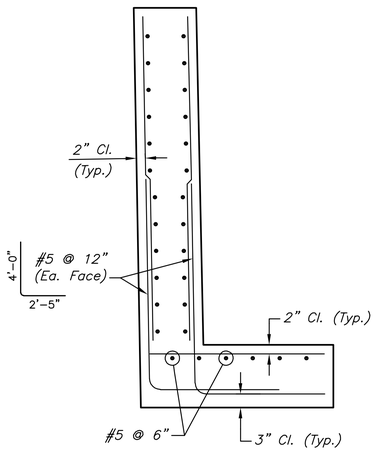

TYPICAL SECTION WALL SECTION D

(Showing reinforcing in Retaining Wall)
(See Wall Sections, Sh. No. 77 for dimensions)

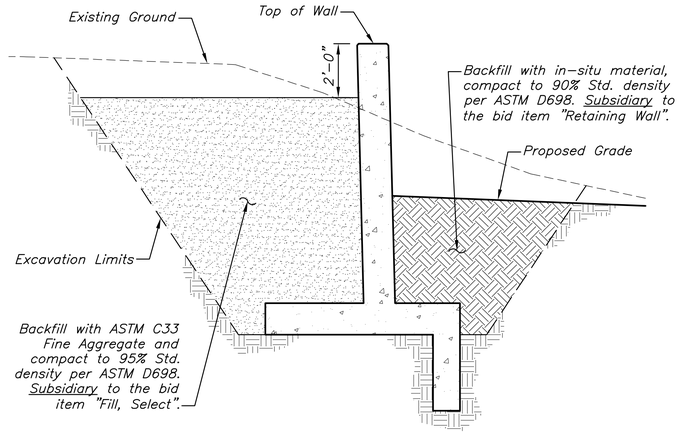

EXCAVATION AND BACKFILL FOR RETAINING WALL

(Looking Up Station)

RETAINING WALL GENERAL NOTES

UNIT STRESSES:
Concrete $f'c = 4$ ksi
Reinforcing Steel (Grade 60) $f_y = 60$ ksi

EXCAVATION: All excavation required for construction of the Retaining Wall shall be Class III Excavation and shall be considered subsidiary to the bid item "Retaining Wall".

GEOLOGIC INFORMATION: Boring Logs are in the file of the Consultant, and are available for inspection by interested and/or qualified bidders.

CONCRETE: Bevel all exposed edges of concrete with a ¾" triangular molding, except as otherwise noted on the plans. Exposed surfaces, except recessed grooves shall be given a rubbed surface. All concrete shall be considered subsidiary to the bid item "Retaining Wall".

REINFORCING STEEL: All reinforcing steel dimensions are to the centerline of bars, unless otherwise noted. All reinforcing steel shall conform to ASTM A615, Grade 60. The Contractor shall submit rebar shop drawings, for approval by the Engineer, prior to fabrication. All reinforcing bar supports shall be per CRSI "Manual of Standard Practice". All reinforcing steel shall be considered subsidiary to the bid item "Retaining Wall".

RETAINING WALL QUANTITIES

(Provided For Information Only)

Location \ Item	Concrete (Cu. Yds.)	Reinforcing Steel (Lbs.)	Fill, Select (Cu. Yds.)
Wall Section A	181.4	31,184	479.6
Wall Section B	250.8	40,710	691.0
Wall Section C	126.9	21,184	402.3
Wall Section D	6.3	923	0.0
TOTAL	566	94,010	1,573

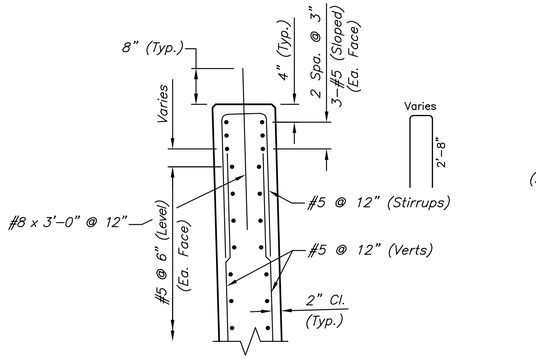

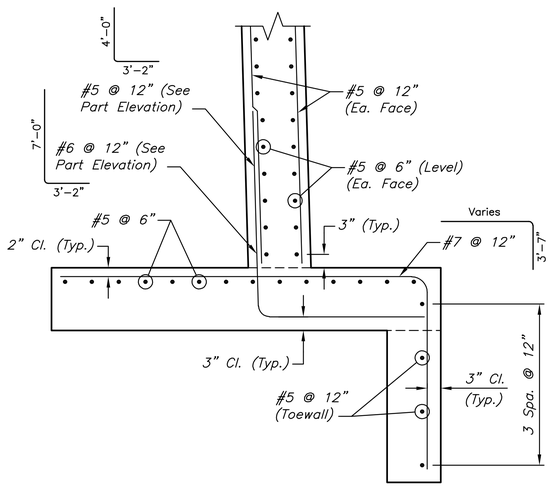

Minimum Splice Length	
#5	2'–2"
#6	3'–0"
Unless otherwise noted on the plans.	

TYPICAL SECTION - WALL SECTIONS A, B, & C

(Showing reinforcing in Retaining Wall)
(See "Part Elevation" for additional detail)
(See Wall Sections, Sh. No. 77 for dimensions)

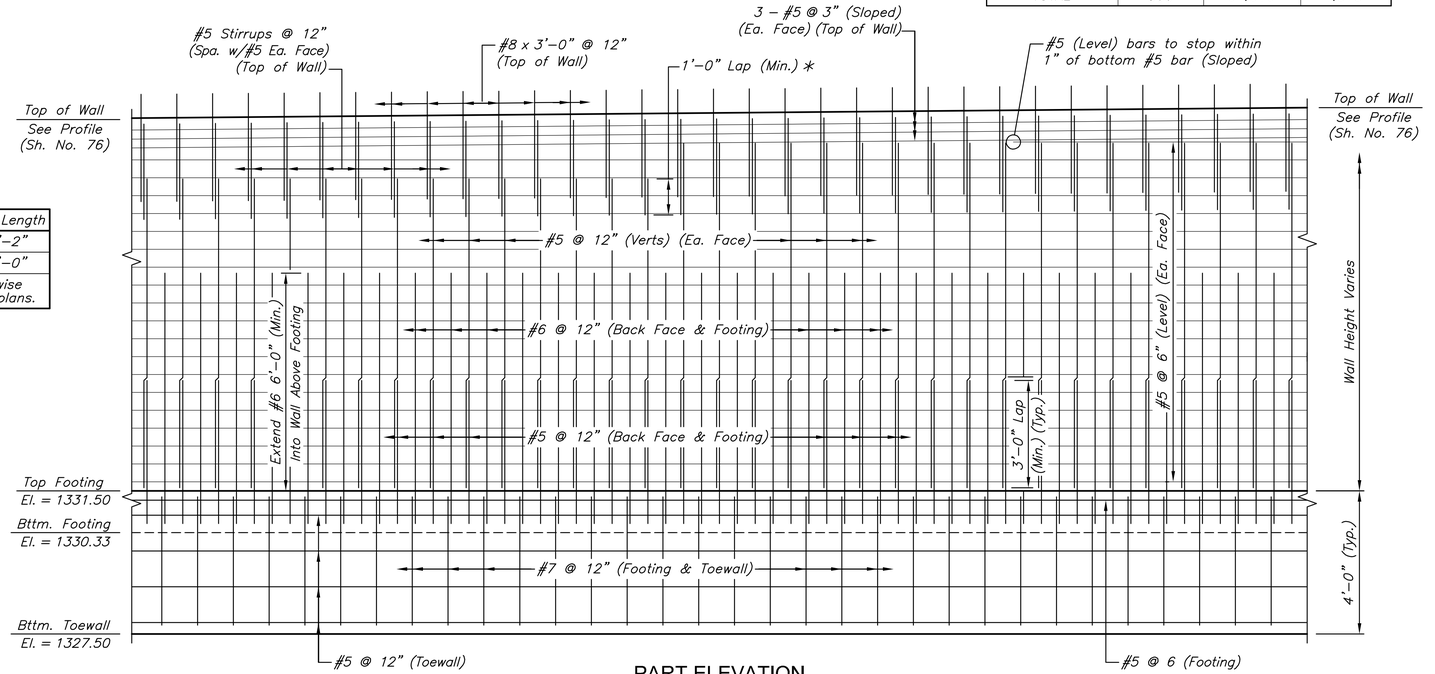

PART ELEVATION

(Showing reinforcing in Retaining Wall)
(See Typical Sections for additional detail)
(See Wall Sections, Sh. No. 77 for dimensions)

∗ *NOTE:*
Lap lengths for #5 Verts and #5 Stirrups in the Top of Wall may vary (1'–0" Min.) to allow for long runs of Verts of the same length.

MKEC
Wichita, KS • 316-684-9600

STREET IMPROVEMENTS FOR

127TH STREET EAST

FROM 13TH STREET NORTH TO 21ST STREET NORTH

©2017
MKEC Engineering
All Rights Reserved
www.mkec.com
These drawings and their contents, including, but not limited to, all concepts, designs, & ideas are the exclusive property of MKEC Engineering (MKEC) and may not be used or reproduced in any way without the express consent of MKEC.

RETAINING WALL DETAILS

PROJECT NO.	472-85158
DATE	11/29/17
SCALE	NTS

DESIGNED	DRAWN	CHECKED
KJS	DMU	KJS

NO.	REVISION	DATE

SHEET NO.

78 OF 183

Sh. No. 78

J:\PROJECTS\2013\140194299 - COW_127TH E 13TH TO 21ST\05-CIVIL\CAD\WALL\14299WD02.DWG

PLOTTED: Wednesday, November 29, 2017 @ 03:00PM

STATE	PROJECT NO.	YEAR	SHEET NO.	SHEETS
KANSAS	87 N-0615-01	2017	79	183

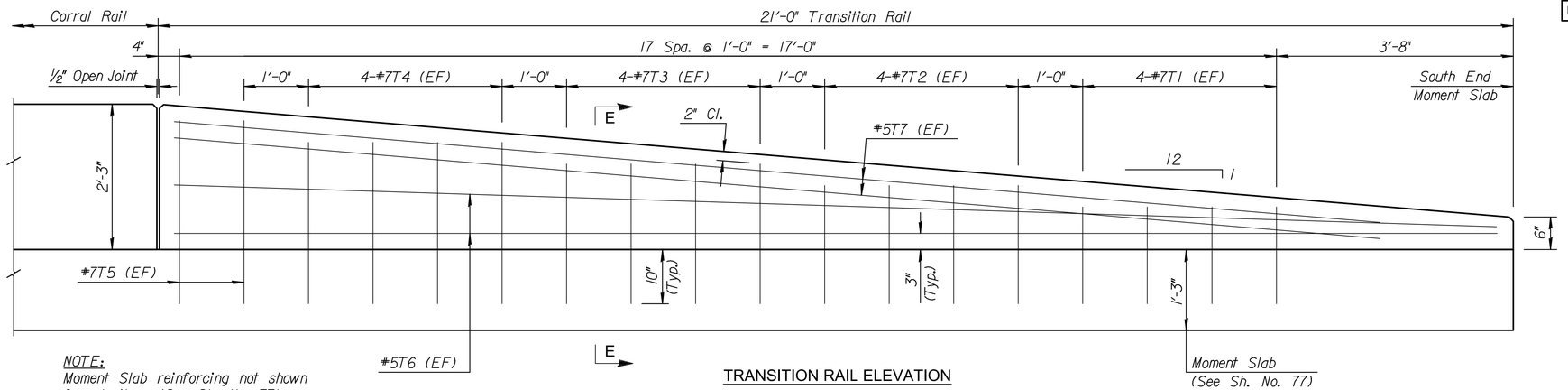

NOTE:
Moment Slab reinforcing not shown for clarity. (See Sh. No. 77)

TRANSITION RAIL ELEVATION
(Along Traffic Face)

GENERAL NOTES

UNIT STRESSES:

Concrete $f'c$ = 4 ksi
Reinforcing Steel (Epoxy-Coated) f_y = 60 ksi

1. The Transition Rail and Corral Rail shall be constructed such that the Traffic Face of the Rail is 24'-0" from the ℄ Proposed Improvements.
2. See Sh. No. 93 for additional sections not shown on this sheet. See Sh. No. 94 for bar bending diagrams not shown on this sheet.
3. Quantities shown on this sheet are provided for information only.
4. All materials, labor, and equipment required for the construction of Corral Rail and Transition Rail shall be considered subsidiary to the bid item "Concrete Safety Barrier".

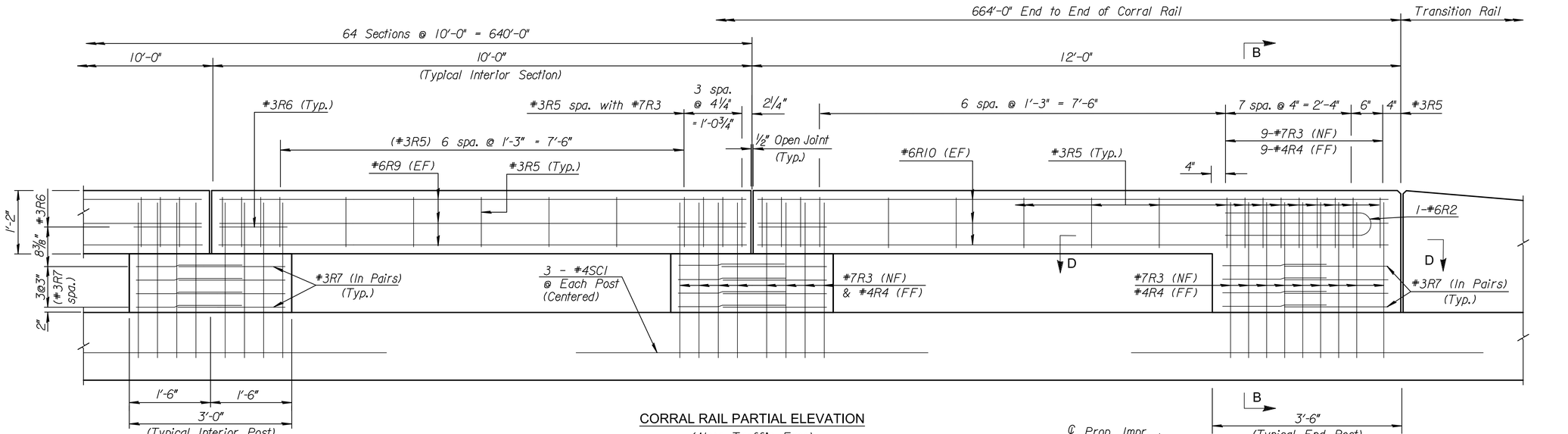

CORRAL RAIL PARTIAL ELEVATION
(Along Traffic Face)

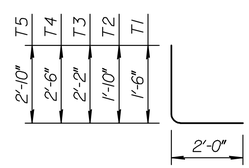

#7T Bars

BILL OF REINFORCING STEEL
(Grade 60, Epoxy-Coated)

	Straight Bars				Bent Bars			
Corral Rail	R9	#6	384	9'-8"	R3	#7	538	6'-11"
	R10	#6	12	11'-8"	R2	#6	2	5'-8"
	SC1	#4	201	6'-6"	R4	#4	538	3'-5"
					R5	#3	868	3'-6"
					R6	#3	130	4'-6"
					R7	#3	536	4'-6"
Transition Rail	T6	#5	4	20'-6"	T1	#7	8	3'-6"
	T7	#5	4	18'-9"	T2	#7	8	3'-10"
					T3	#7	8	4'-2"
					T4	#7	8	4'-6"
					T5	#7	4	4'-10"

LEGEND

NF = Near Face
FF = Far Face
EF = Each Face

CORRAL RAIL QUANTITIES
(Provided For Information Only)

Location \ Item	Concrete (Cu. Yds.)	Reinforcing Steel (Epoxy-Coated)(Lbs.)
Corral Rail	36.6	19,010

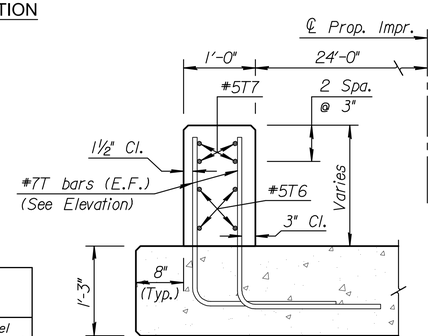

SECTION E-E

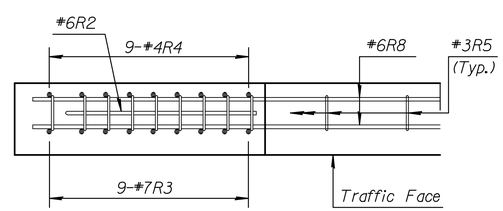

SECTION D-D

MKEC
Wichita, KS • 316-684-9600

STREET IMPROVEMENTS FOR

127TH STREET EAST

FROM 13TH STREET NORTH TO 21ST STREET NORTH

©2017
MKEC Engineering
All Rights Reserved
www.mkec.com
These drawings and their contents, including, but not limited to, all concepts, designs, & ideas are the exclusive property of MKEC Engineering (MKEC), and may not be used or reproduced in any way without the express consent of MKEC.

TRANSITION RAIL AND CORRAL RAIL DETAILS	
PROJECT NO.	472-85158
DATE	11/29/17
SCALE	NTS
DESIGNED / DRAWN / CHECKED	KJS / DMU / KJS

NO.	REVISION	DATE

SHEET NO.
79 OF 183

Sh. No. 79

J:\PROJECTS\2014\1401040290 - COV_127TH E 13TH TO 21ST\05-CIVIL\CAD\WALL\14290WD03.DWG

PLOTTED: Wednesday, November 29, 2017 @ 03:01PM

STATE	PROJECT NO.	YEAR	SHEET NO.	TOTAL SHEETS
KANSAS	87 N–0615–01	2017	80	183

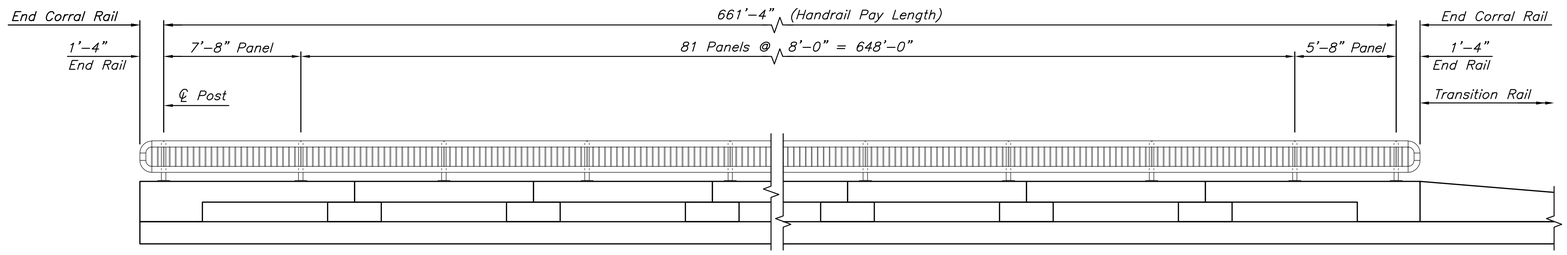

PART ELEVATION - HANDRAIL, BICYCLE

(Shown and dimensioned along Traffic Face of Corral Rail on Moment Slab)

HANDRAIL NOTES

1. *The rail members shall conform to ASTM Designation A36 or equivalent.*
2. *Rail shall be fabricated in lengths to include a minimum of two and a maximum of three panels. Posts shall be set vertical. Shims may be used between concrete and base plates of posts.*
3. *All parts of handrail shall be painted. The primer coat shall conform to the inorganic zinc system. Surface preparation shall be in accordance with that for structural steel. The finish coat shall be in accordance with water–borne acrylic finish coat.*
4. *The Contractor shall submit color chart for approval by the City. The color shall be "black (carboline C900)".*
5. *All materials, equipment and labor necessary for the installation of the handrail shall be subsidiary to the bid item.*

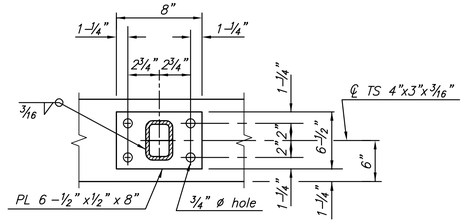

BASE PLATE DETAIL

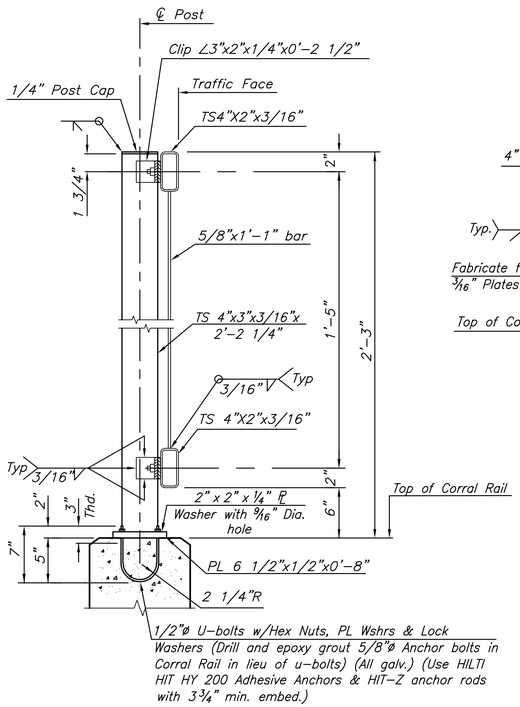

TYPICAL RAIL SECTION

NO SCALE

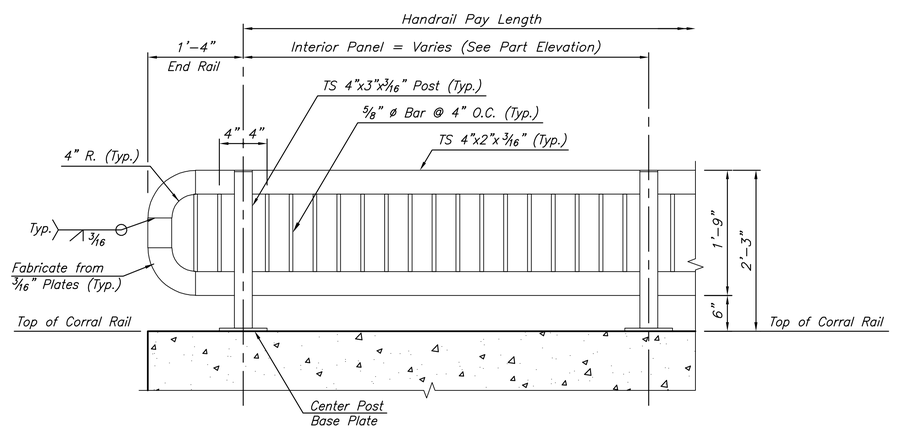

TYPICAL PANEL DETAIL

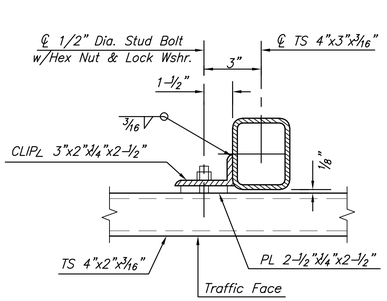

RAIL CONNECTION DETAIL

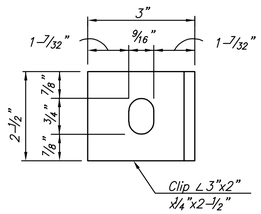

CLIP DETAIL

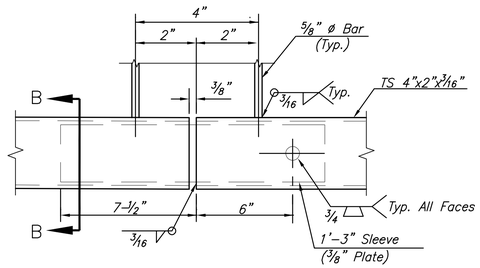

SLEEVE DETAIL

(Bottom Rail Shown, Top Rail Similar)

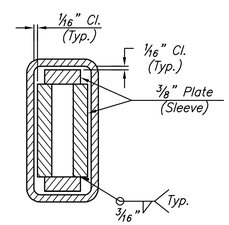

SECTION B-B

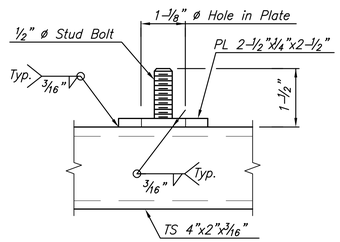

STUD BOLT DETAIL

MKEC
Wichita, KS • 316-684-9600

STREET IMPROVEMENTS FOR

127TH STREET EAST

FROM 13TH STREET NORTH TO 21ST STREET NORTH

©2017
MKEC Engineering
All Rights Reserved
www.mkec.com
These drawings and their contents, including, but not limited to, all concepts, designs, & ideas are the exclusive property of MKEC Engineering (MKEC), and may not be used or reproduced in any way without the express consent of MKEC.

"HANDRAIL, BICYCLE"

PROJECT NO.	472-85158
DATE	11/29/17
SCALE	NTS

DESIGNED	DRAWN	CHECKED
JRA	DMU	JRA

NO.	REVISION	DATE

SHEET NO.

80 OF 183

Sh. No. 80

J:\PROJECTS\2014\1401040290 - COV_127TH E 13TH TO 21ST\05-CIVIL\CAD\WALL\14290WD04.DWG

PLOTTED: Thursday, November 30, 2017 @ 08:29AM

SUMMARY OF QUANTITIES

Item / Location	Excavation Class I Cu. Yds.	Excavation Class II Cu. Yds.	Concrete (Grade 4.0) (AE) (SA) Cu. Yds.	Concrete (Grade 4.0) (AE) Cu. Yds.	Reinforcing Steel (Epoxy Coated) (Grade 60) Lbs.	Piles * (Steel) (HP12x53) Lin. Ft.	Piles * (Steel) (HP12x74) Lin. Ft.	Contractor Furnished PDA Each	Multi-Layer Polymer Concrete Overlay Sq. Yds.	Handrail, Pedestrian Lin. Ft.	Handrail, Bicycle Lin. Ft.	Reinforced Concrete Riprap Sq. Yds.	Construction Staking, Bridge Lump Sum
Abutment No. 1	78.8	-	**	-	**	92.4	-	1	-	-	-	-	-
Pier No. 1	-	42.1	-	23.3	2,695	-	102.8	-	-	-	-	-	-
Pier No. 2	-	39.5	-	23.3	2,695	-	104.4	1	-	-	-	-	-
Abutment No. 2	87.5	-	**	-	**	96.0	-	-	-	-	-	-	-
Substr. Total	166.3	81.6	-	46.6	5,390	188.4	207.2	2	-	-	-	207.2	-
Superstr. Total	-	-	214.6	-	71,150	-	-	-	645.0	100.0	199.8	-	-
Total	166.3	81.6	214.6	46.6	76,540	188.4 †	207.2 †	2	645.0	100.0	199.8	207.2	1

** Quantities are included in the Superstr. Total Quantity.

† Summary of Piling
Abutment No. 1 4 @ 23.1'
Pier No. 1 4 @ 25.7'
Pier No. 2 4 @ 26.1'
Abutment No. 2 4 @ 24.0'

* NOTE: Use only HP12x53 piling in the Abutments and HP12x74 piling in the Piers.

INDEX TO BRIDGE DRAWINGS

Sheet No.	Drawing
81	General Notes & Quantities
82	Contour Map
83	Construction Layout
84	Bridge Demolition Plan
86-89	Bridge Details - Phase 2
90-92	Bridge Details - Phase 3
93	Corral Rail Details
94	Bill of Reinforcing Steel
95	Concrete Rip Rap Plan & Details
96-97	Handrail Details
98	Bridge Plaque Details
	Standards
99	Bridge Excavation
100	Standard Pile Details
101	Supports & Spacers for Reinforcing Steel

GENERAL NOTES

EXISTING STRUCTURE: Plans of the existing structure are on file and available for inspection by qualified bidders at the Bureau of Local Projects, KDOT, Eisenhower State Office Building, 700 SW Harrison, Topeka, KS.

EMBANKMENT: Complete the embankment at the abutments as shown on the Bridge Excavation sheet prior to driving the abutment piling or commencing with the abutment footing excavation.

BRIDGE EXCAVATION: Elevation 1336.0 shall designate the Excavation Boundary Plane of Class I and Class II Excavation; Class I above the plane, Class II below the plane. See the Bridge Excavation sheet for the limits of pay excavation.

BACKFILL COMPACTION: Compact backfill at the abutments and piers.

PILING: Drive all piling to penetrate the Shale. Driving shall stop when in the opinion of the Engineer additional driving may damage the piling. As a minimum drive each pile to the load and penetration, but in no case shall the pile be driven to more than 110% of Design Pile Load.

CONTRACTOR FURNISHED PDA: Use the Pile Driving Analyzer equipment at the locations shown in the Construction Layout. Use Pile Driving Analyzer equipment and methods compliant with KDOT Special Provisions. The piling shall remain in place as permanent piling. Drive the piling to the resistance value of (Strength I divided by Phi). At any location where problems are experienced, pile damage suspected, or the Pile Driving Formula Load occurs significantly above the design tip elevation, the Engineer may request that the Pile Driving Analyzer (PDA) equipment be used.

CORRAL RAIL: Build the corral rail and curb after the falsework is struck. The falsework is required to be struck to ensure the concrete slab is self-supported.

HANDRAIL: Construction joints in the rail are not permitted except as shown. Build the handrails after the falsework is struck.

BROKEN CONCRETE: Waste the broken concrete from the existing bridge on sites provided by the Contractor and approved by the Engineer.

REMOVAL OF EXISTING STRUCTURE: Removal of existing structure is included in the bid item, "Removal of Existing Structures", Lump Sum. All materials removed from the existing structure shall become the property of the Contractor. Remove this material from the site.

CONCRETE: Superstructure concrete is bid as Concrete (Grade 4.0)(AE)(SA). Substructure concrete is bid as Concrete (Grade 4.0)(AE). The Contractor may use Concrete (Grade 4.0) in the footings. Bevel all exposed edges of all concrete with a ¾" inch triangular molding, except as otherwise noted on the plans. Construction joints are optional with the Contractor, but if used, place only at locations shown, or at locations approved by the Engineer.

REINFORCING STEEL: All reinforcing steel dimensions are to the centerline of bars unless otherwise noted. All reinforcing steel, except the spiral bars, shall conform to the requirements of ASTM A615, Grade 60. Spiral bars may meet the requirements of either ASTM A615 (Gr. 40 or 60) or AASHTO M 32, and are included in the bid item "Reinforcing Steel (Gr. 60)".

CAMBER: Provide camber as shown on the Camber Diagram unless the Contractor uses either long span steel beam falsework (concrete dead load deflection greater than ¼ inch) or timber falsework with greater than 12'-0" clear span. If either case exists, submit falsework plans that show the additional required camber.

FALSEWORK PLANS: A licensed Professional Engineer shall design the falsework details. Details shall bear the seal of a licensed Professional Engineer. See the Bridge Design Manual, Section 16.1 "Review and Approval of Falsework Plans", for a listing of items to be included on the falsework plan. Submit electronic plans conforming to Section 105 of the Standard Specification with details in compliance with KDOT Specifications to the Field Engineer for review.

FALSEWORK: Leave the falsework in place in the last span cast and in the next adjacent span until 15 days have elapsed or longer as directed by the Engineer.

CONCRETE PLACING SEQUENCE: The sequence of placing concrete in the slab and curbs shall be as shown, or the Contractor may submit an alternate placing sequence for review. Submit the alternate placing sequence to the Engineer at the Preconstruction Conference. Include the proposed rate of concrete placement in C.Y./h, the plant capacity, placement direction, construction joint location, a description of the equipment used in placing the concrete, proposed admixtures, and the quantity of concrete in each placing segment. Any additional cost for the Contractor's alternate plan of placing concrete, including admixtures, shall be at the Contractor's expense and shall be considered subsidiary to the bid item, "Concrete (Grade 4.0) (AE) (SA)". Approval of the Contractor's alternate sequence is required prior to placement of concrete in the deck.

CONSTRUCTION LOADS: Limited traffic is permitted on the new sub-deck, one-course deck or any concrete overlay during the curing period, keep any exposed deck wet during the curing period. See KDOT Specifications Section 710 Tables 710-1 & 710-2 for additional information.

SLAB ELEVATIONS: The Contractor shall record elevation readings on the "Slab Elevations" sheet in the table at locations designated by a "(2)".The Engineer shall submit the table on a half-sized sheet to the State Bridge Office, KDOT, Eisenhower State Office Building, 700 SW Harrison, Topeka, KS.

DECK FINISHING: Set the finishing machine parallel to the skew for striking off and screeding the concrete. Screeding normal to the centerline of the bridge will not be allowed.

MULTI-LAYER POLYMER CONCRETE OVERLAY: The Contractor shall apply a Multi-Layer Polymer Concrete Overlay over the entire bridge deck, after expansion of the Superstructure, in accordance with Section 729 of the KDOT Standard Specifications.

TEMPERATURE: The design temperature for all dimensions is 60° F.

QUANTITIES: Items not listed separately in the Summary of Quantities are subsidiary to other items in the proposal.

DIMENSIONS: All dimensions shown on the design plans are horizontal dimensions unless otherwise noted. Make necessary allowances for roadway grade and cross slope.

CONSTRUCTION JOINTS: The construction joints shown are optional with the Contractor. If used, place the construction joints only at locations shown or at locations approved by the Engineer.

PREPARATION OF CONCRETE SURFACES: All concrete surfaces abutting proposed or existing concrete shall be prepared prior to casting the new concrete. This shall consist of brush blasting, power washing and water-soaking immediately prior to casting new concrete. This work shall be considered subsidiary to the bid item "Concrete, Grade 4.0 (AE)(SA)".

PLAN NOTE: The dimensions used in the development of these plans were derived from several sources that were somewhat inconsistent. There may arise, during construction, small dimensional discrepancies. These dimensional discrepancies shall be resolved by the Engineer.

CONSTRUCTION STAKING: Contractor is responsible to provide construction staking for the bridge. The extent of bridge construction staking shall be determined by the contractor. KDOT specifications do not necessarily apply. Staking for the bridge shall be subsidiary to the bid item "Construction Staking, Bridge".

DESIGN DATA

DESIGN SPECIFICATIONS: AASHTO Specifications (1983 Edition) and Interims to year 1988.

DESIGN LOADING:
HS20-44

Design Dead Load includes an allowance of 25 psf for a future wearing surface.

UNIT STRESSES:

Concrete (Grade 4.0)	$f'c$ =	4 ksi
Concrete (Grade 4.0)(AE)	$f'c$ =	4 ksi
Concrete (Grade 4.0)(AE)(SA)	$f'c$ =	4 ksi
Reinforcing Steel (Grade 60)	f_y =	60 ksi

DESIGN PILE LOAD (Tons/Pile)		
Location	Strength I	Service I
Abutment	66	40
Pier	150	92
Phi ϕ = 0.65		

LRFR RATING FACTORS		
Truck / Rating Level	Inventory	Operating
HS20-44 Loading	0.9	1.2
Manual for Bridge Evaluation, Second Ed.		

MKEC
Wichita, KS • 316-684-9600

STREET IMPROVEMENTS FOR

127TH STREET EAST

FROM 13TH STREET NORTH TO 21ST STREET NORTH

©2017
MKEC Engineering
All Rights Reserved
www.mkec.com
These drawings and their contents, including, but not limited to, all concepts, designs, & ideas are the exclusive property of MKEC Engineering (MKEC), and may not be used or reproduced in any way without the express consent of MKEC.

GENERAL NOTES & QUANTITIES

PROJECT NO.	472-85158
DATE	11/29/17
SCALE	NTS
DESIGNED	DMU
DRAWN	RAM
CHECKED	KJS

NO.	REVISION	DATE

SHEET NO.
81 OF 183

J:\PROJECTS\2014\1401940290 - COW_127TH E 13TH TO 21ST\105-CIVIL\CAD\BRIDGE\1402902N1.DWG

PLOTTED: Wednesday, November 29, 2017 @ 03:02PM

PI Sta. 10+00.00 (127th St. E.) = SW Cor. Sec. 11, T27S, R2E
1. Found 5/8" rebar with Garber cap
2. Chiseled "X" on se cor. conc. traffic signal pole base — 71.91' NW
3. Chiseled "X" on southerly cor. of conc. traffic signal pole base — 72.35' NE
4. Chiseled "X" on nw cor. of conc. traffic signal pole base — 71.08' SE
5. Chiseled "X" on easterly cor. of conc. traffic signal pole base — 68.57' SW
6. N=1694562.090, E=1691609.681

Sta. 36+48.50 (127th St. E.) = W 1/4 Cor. Sec. 11, T27S, R2E
1. Found 1/2" rebar with 2" alum. cap stamped "MKEC CKS 39"
2. PK nail & MKEC disc in N fc of PP — 49.40' ENE
3. Concrete nail & washer in S fc of meter pole — 49.68' NE
4. 60d nail in W fc of S leg of H pole structure — 98.93' NNE
5. Mag nail in top of guard post — 47.55' SW
6. N=1697209.960, E=1691551.888

Sta. 63+04.80 (127th St. E.) = NW Cor. Sec. 11, T27S, R2E
1. Found 1/2" pipe in thimble
2. City of Wichita BM disc in conc. traffic signal base — 70.98' NE
3. Chiseled "X" on top of curb — 68.00' SE
4. Chiseled "X" on top of curb — 69.17' NW
5. Chiseled "X" on top of curb — 68.57' SW
6. N=1699865.966, E=1691512.073

STATE	PROJECT NO.	YEAR	SHEET NO.	TOTAL SHEETS
KANSAS	87 N-0615-01	2017	82	183

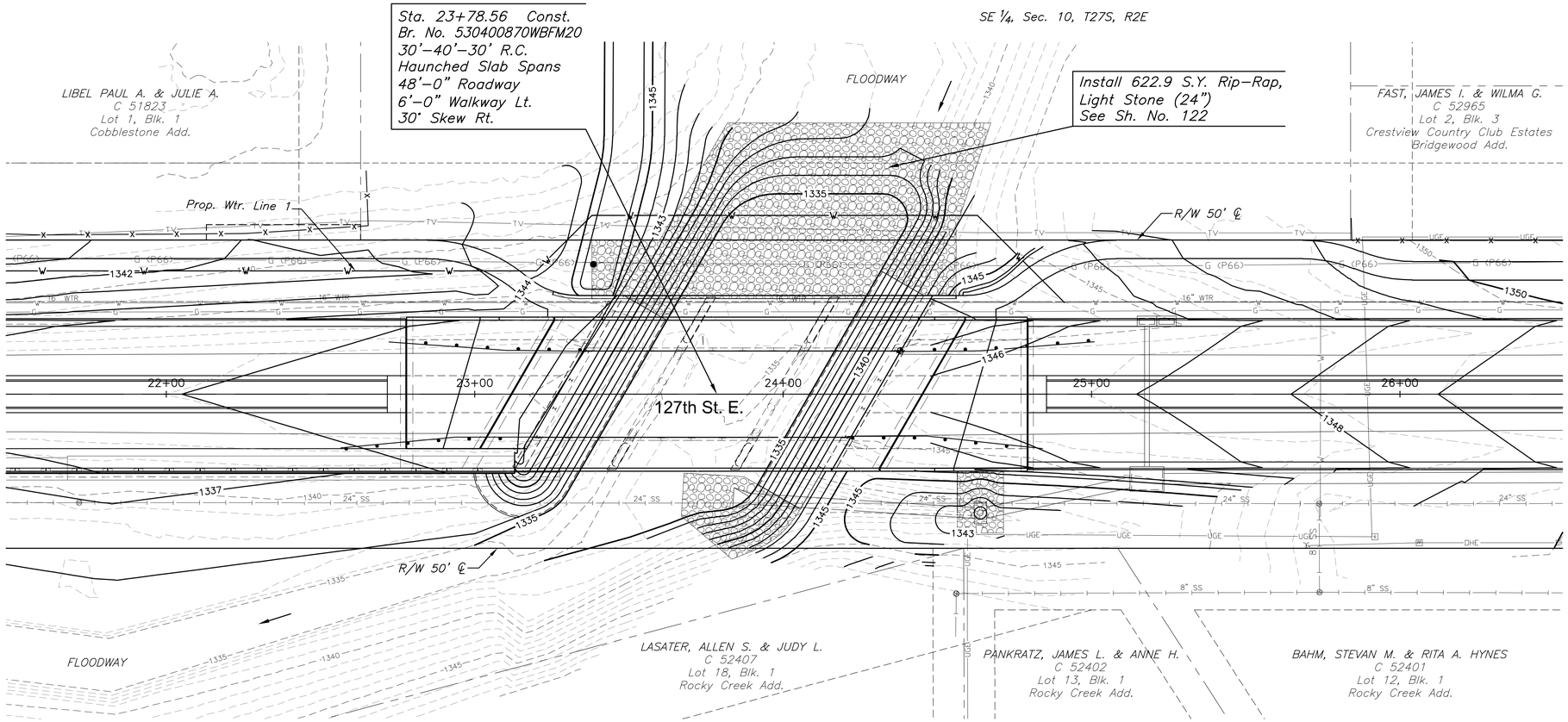

PLAN

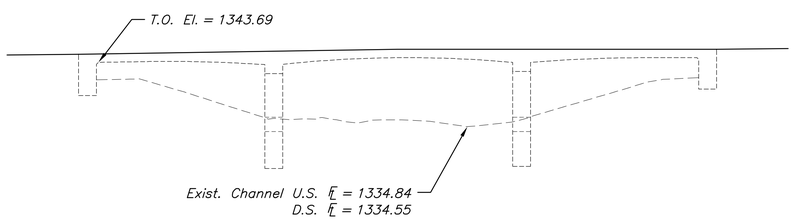

EXISTING WEST BRANCH FOURMILE CREEK

Waterway Opening of Exist. 30'-40'-30' RCSH (Upstream)
At ℄ Sta. 24+04.3, 15' Lt. (127th St. E.)
Area = 491.1 Sq. Ft. (Bridge)

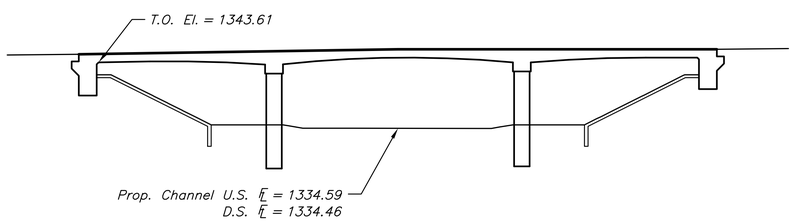

EXISTING WEST BRANCH FOURMILE CREEK

Waterway Opening of Prop. 30'-40'-30' RCSH (Upstream)
At ℄ Sta. 23+97.0, 32' Lt. (127th St. E.)
Area = 589.2 Sq. Ft. (Bridge)

SCALE: 1"=20'
0 10 20 40

Contour Interval = 1'

HIGHWATER INFORMATION

Highwater elevation is unavailable

MKEC
Wichita, KS • 316-684-9600

STREET IMPROVEMENTS FOR

127TH STREET EAST

FROM 13TH STREET NORTH TO 21ST STREET NORTH

©2017
MKEC Engineering
All Rights Reserved
www.mkec.com
These drawings and their contents, including, but not limited to, all concepts, designs, & ideas are the exclusive property of MKEC Engineering (MKEC), and may not be used or reproduced in any way without the express consent of MKEC.

CONTOUR MAP

PROJECT NO.	472-85158
DATE	11/29/17
SCALE	1"=20'

DESIGNED	DRAWN	CHECKED
KJS	DMU	KJS

NO.	REVISION	DATE

SHEET NO.

82 OF 183

Sh. No. 82

J:\PROJECTS\2014\1401040299 - COW_127TH E 13TH TO 21ST\06-CIVIL\CAD\BRIDGE\1402902P01.DWG

PLOTTED: Wednesday, December 06, 2017 @ 02:29PM

STATE	PROJECT NO.	YEAR	SHEET NO.	TOTAL SHEETS
KANSAS	87 N–0615–01	2017	83	183

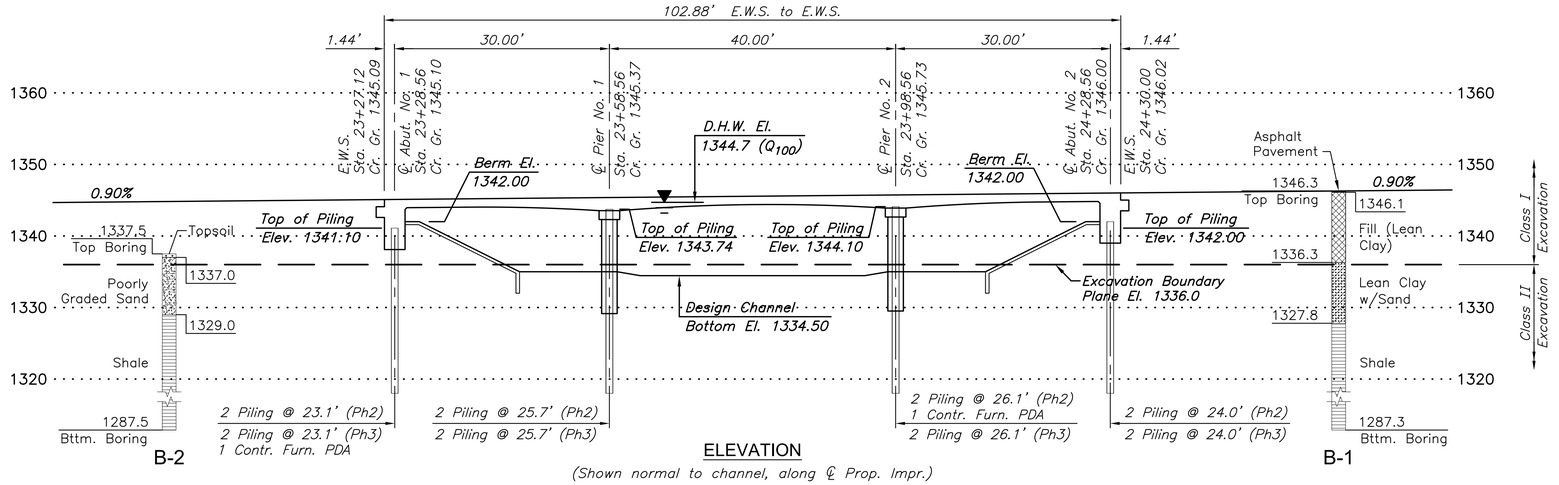

ELEVATION

(Shown normal to channel, along ℄ Prop. Impr.)

30'–40'–30' Reinf. Conc. Haunched Slab
Pile Bent Abutments & Piers
48'–0" Roadway with 6'–0" Walkway Lt.
30° Skew Rt.

BM#2 Chiseled square top of curb in front of a FH at the NW Cor. of 127th St. E. & Birchwood Dr. Sta. 17+34.47, 54.79' Lt. Elev. = 1342.27 (NAVD88)

BM#4 Chiseled square top of curb in front of a FH at the NW Cor. of 127th St. E. & Castlewood Dr. Sta. 29+13.45, 55.14' Lt. Elev. = 1354.41 (NAVD88)

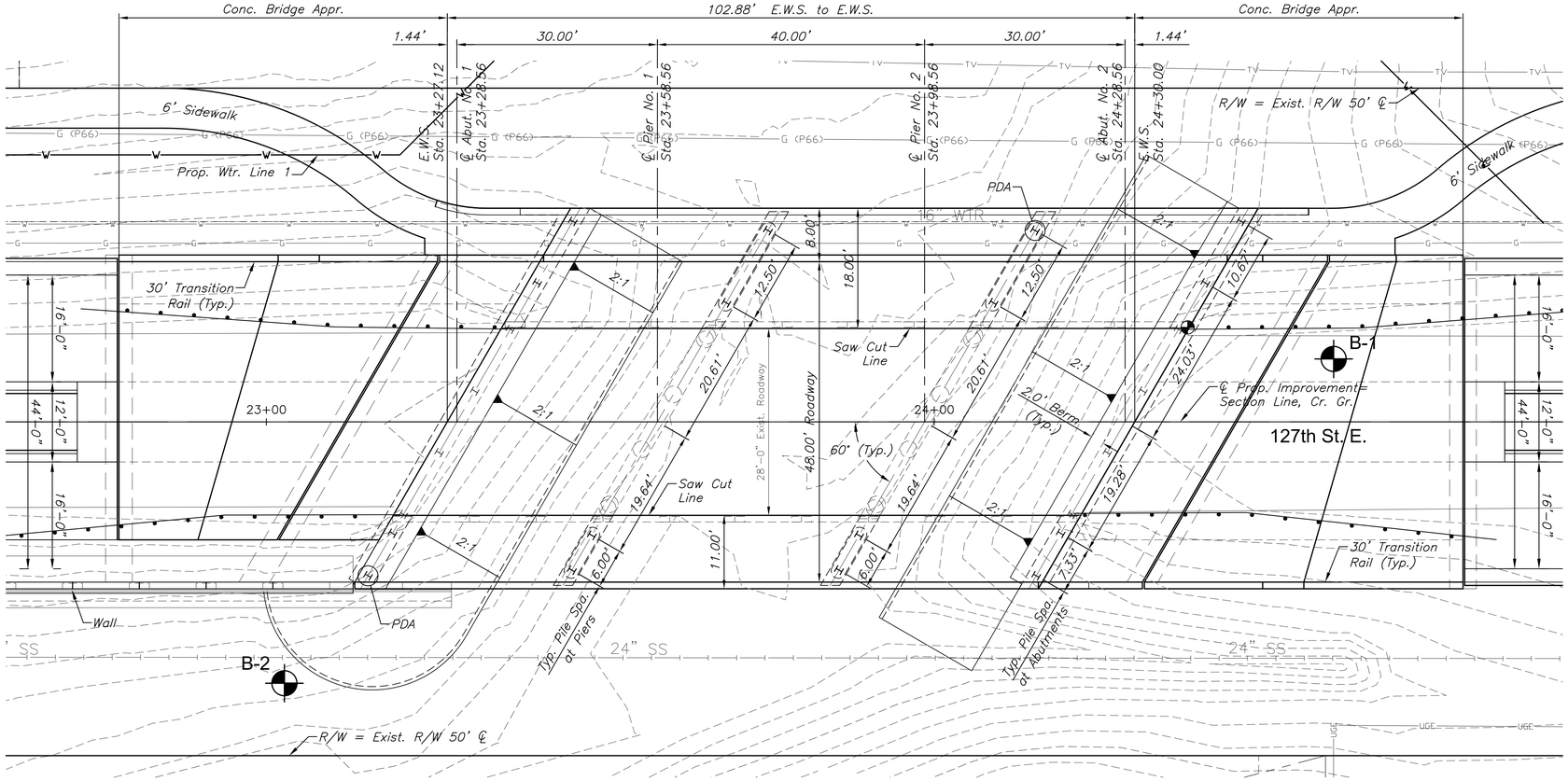

PLAN

DRAINAGE DATA

Drainage Area	3.4	Sq. Mi.
Design Frequency	100	Years
Design Discharge (Q_{100})	2,623	cfs
Design High Water Elevation	1345.3	Ft.
Change in Design Backwater	1.4	Ft.
Design Backwater Elevation	1343.9	Ft.
Overtopping Elevation (Sta. 23+17)	1345.5	Ft.
Overtopping Discharge	2,623	cfs
Overtopping Frequency	500	Years
Discharge at Q_{100}	2,623	cfs
Change in Backwater at Q_{100}	1.4	Ft.
Backwater Elevation at Q_{100}	1343.9	Ft.
Historic High Water Elevation	N/A	Ft.
Ordinary High Water Elevation	1342.2	Ft.
Total Waterway Provided	589.2	Sq. Ft.
Design Waterway Provided	589	Sq. Ft.
Estimated Ordinary High Water Discharge	1,000	cfs

The thermal movement at the abutment is ± ¼"



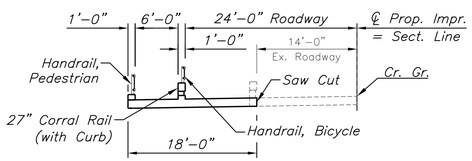

PART DECK SECTION

Left of ℄ Prop. Impr.
(Looking Up Station)

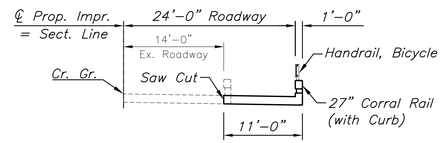

PART DECK SECTION

Right of ℄ Prop. Impr.
(Looking Up Station)

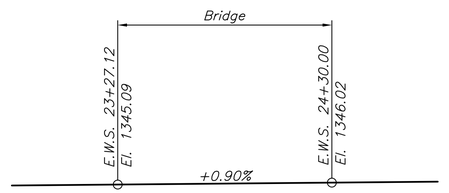

CROWN PROFILE GRADE

MKEC
Wichita, KS • 316-684-9600

STREET IMPROVEMENTS FOR

127TH STREET EAST

FROM 13TH STREET NORTH TO 21ST STREET NORTH

©2017
MKEC Engineering
All Rights Reserved
www.mkec.com
These drawings and their contents, including, but not limited to, all concepts, designs, & ideas are the exclusive property of MKEC Engineering (MKEC), and may not be used or reproduced in any way without the express consent of MKEC.

CONSTRUCTION LAYOUT

PROJECT NO.	472-85158
DATE	11/29/17
SCALE	1"=10'

DESIGNED	DRAWN	CHECKED
KJS	DMU	KJS

NO.	REVISION	DATE

SHEET NO.

83 OF 183

Sh. No. 83

J:\PROJECTS\2014\140104029\0 - CON_127TH E 13TH TO 21ST\05-CIVIL\CAD\BRIDGE\142902P02.DWG

PLOTTED: Wednesday, November 29, 2017 @ 03:03PM

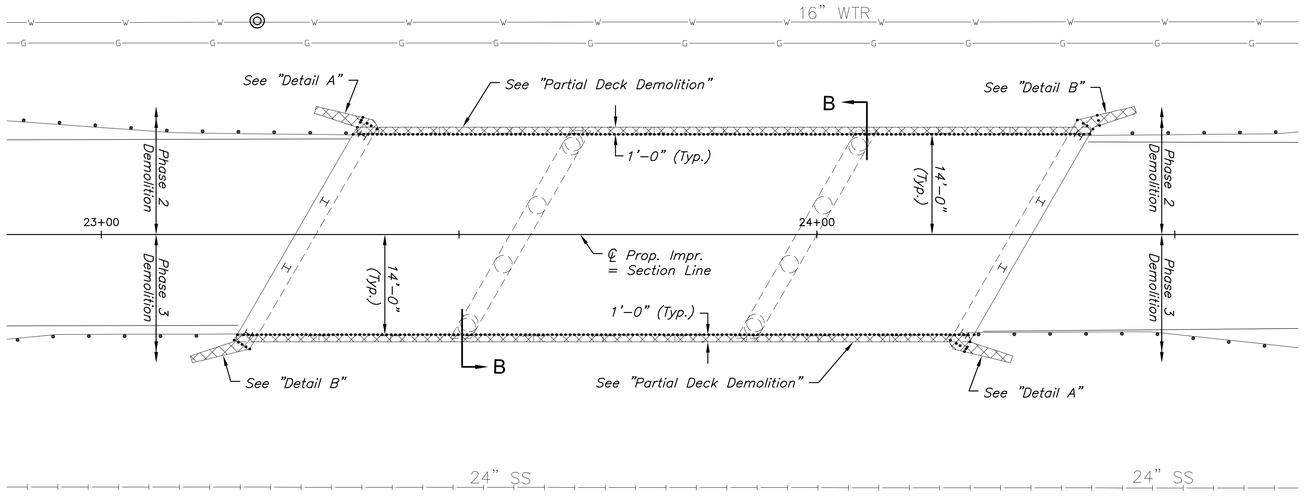

DEMOLITION PLAN

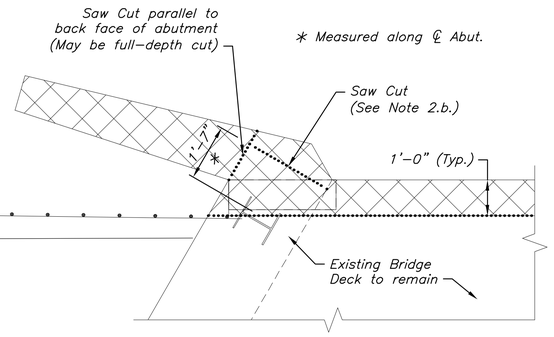

DETAIL A

(Southwest Wing shown, Northeast Wing identical)

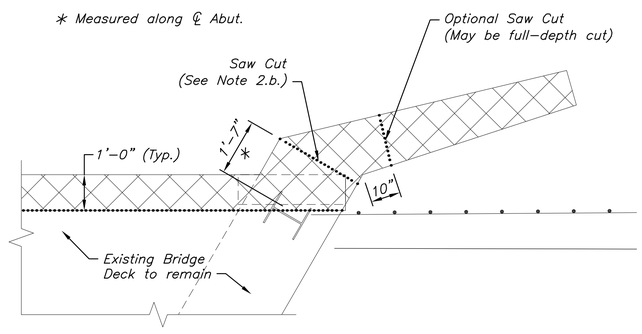

DETAIL B

(Northwest Wing shown, Southeast Wing identical)

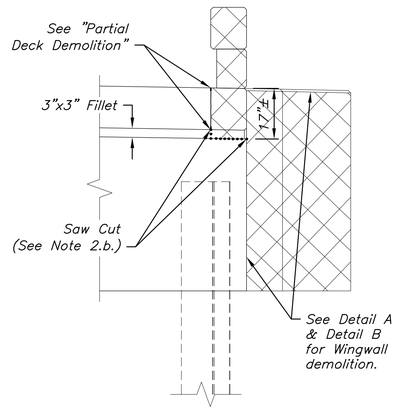

ELEVATION AT ABUTMENTS

(Shown Perpendicular to ℄ Prop. Impr.)
(Looking North at Northeast Wing, Looking South at Southwest Wing)
(Other Wings mirrored but similar)

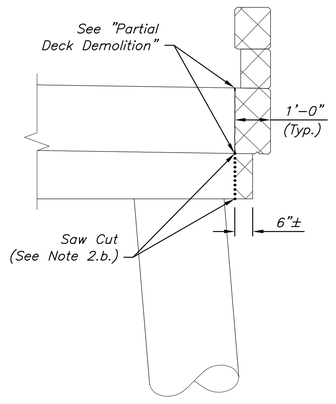

ELEVATION AT PIERS

(Shown Perpendicular to ℄ Prop. Impr.)
(Phase 2 – Looking South, Phase 3 – Looking North)

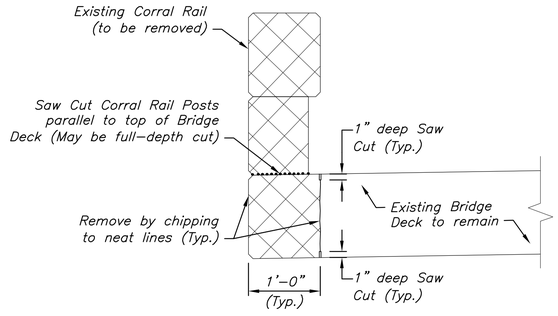

PARTIAL DECK DEMOLITION

(Typical Section, Shown Perpendicular to ℄ Prop. Impr.)
(Phase 2 – Looking North, Phase 3 – Looking South)

LEGEND

Saw Cut Line

Demolition

DEMOLITION GENERAL NOTES

1. *The Contractor shall remove portions of the bridge deck, wingwalls, and abutments as shown for demolition on the plan.*
2. *Demolition in all areas shall be accomplished in the following order:*
   - 2.a. *The existing corral rail may need to be removed first to accomodate longitudinal saw cuts on the existing bridge deck. This may be accomplished by performing a full depth saw cut through the existing corral rail posts parallel to the top surface of the existing bridge deck.*
   - 2.b. *The Contractor shall perform a one inch (1") deep saw cut at the Saw Cut Line locations represented on the plan. This includes the top and bottom of bridge deck, vertical and bottom faces of piers, and the exposed faces of abutments and wingwalls. The Contractor may perform full–depth saw cuts, only where noted, on the portions of wingwalls to be removed. Wing reinforcing that is not epoxy coated should be field cut to provide 2" clear.*
   - 2.c. *The Contractor shall complete demolition using low impact demolition methods. Use of jack hammers or chipping hammers heavier than the nominal 15–pound class will not be permitted. The Contractor shall use caution not to damage existing transverse reinforcing steel exposed during chipping operations. Partially exposed longitudinal reinforcing shall be removed. Additional chipping may be required in these areas. Existing concrete shall be removed to neat, uniform lines between saw cuts.*
   - 2.d. *Transverse reinforcing steel may be field cut to provide plan clearances. Cut ends of epoxy coated reinforcing steel or any other damage to epoxy coating on existing reinforcing steel to remain shall be repaired by the Contractor in accordance with KDOT Standard Specifications.*
3. *Immediately prior to casting new concrete, the existing concrete surface shall be prepared as noted in "PREPARATION OF EXISTING CONCRETE" on sheet 81.*

MKEC
Wichita, KS • 316-684-9600

STREET IMPROVEMENTS FOR

127TH STREET EAST

FROM 13TH STREET NORTH TO 21ST STREET NORTH

©2017
MKEC Engineering
All Rights Reserved
www.mkec.com
These drawings and their contents, including, but not limited to, all concepts, designs, & ideas are the exclusive property of MKEC Engineering (MKEC), and may not be used or reproduced in any way without the express consent of MKEC.

BRIDGE DEMOLITION PLAN

PROJECT NO.	472-85158
DATE	11/29/17
SCALE	AS SHOWN

DESIGNED	DRAWN	CHECKED
KJS	DMU	KJS

NO.	REVISION	DATE

SHEET NO.

84 OF 183

Sh. No. 84

J:\PROJECTS\2014\0104\090 - COW_127TH E 13TH TO 21ST\05-CIVIL\CAD\BRIDGE\1429025P.DWG

PLOTTED: Wednesday, November 29, 2017 @ 03:04PM

SLAB ELEVATIONS

				Formwork			Screed			Thickness			Deck Profile	
1	2	3	4	5	6	7	8	9	10	11	12	13	14	15
Survey	Station	† Location	Transverse Location	Target Elevation TOF	Actual Elevation TOF	TOF Variance (QA/QC)	Target Screed El. = TOC El.	Actual Bottom of Screed Elevation Prior to Pour	Screed Variance (QA/QC)	Plan Deck Thickness	Measured Deck Thickness	Deck Thickness Variance (QA/QC)	Plan TOC El.	Actual TOC El. Optional Survey
	(1)(16)	(13)	(13)	(1)(6)	(2)	(± in) (2)(5)	(1)(6)	(2)	(± in) (2)(7)	(in) (1)	(in) (2)(8)	(± in) (2)(9)	(1)	Date: (3)
A	23+47.03	℄ Brg. of Abut. #1	Left Fascia										1344.76	
	23+28.56		Crown Gr. ℄				–	–	–				1345.10	
	23+14.12		Right Fascia										1344.58	
B	23+48.48	Interior Face of Abut. #1	Left Fascia							14.0			1344.78	
	23+30.00		Crown Gr. ℄							–			1345.12	
	23+15.57		Right Fascia							14.0			1344.59	
C	23+59.03	4/10 Point from Abut. #1	Left Fascia							14.1			1344.87	
	23+40.56		Crown Gr. ℄							–			1345.22	
	23+26.12		Right Fascia							14.1			1344.69	
D	23+75.59	Span #1 Face of Pier Beam	Left Fascia							22.0			1345.02	
	23+57.11		Crown Gr. ℄							–			1345.37	
	23+42.68		Right Fascia							22.0			1344.84	
E	23+77.03	℄ Brg. of Pier #1	Left Fascia										1345.03	
	23+58.56		Crown Gr.										1345.37	
	23+44.12		Right Fascia										1344.85	
F	23+78.48	Span #2 Face of Pier Beam	Left Fascia							22.0			1345.05	
	23+60.00		Crown Gr. ℄							–			1345.39	
	23+45.57		Right Fascia							22.0			1344.86	
G	23+97.03	Midpoint of Span #2	Left Fascia							14.0			1345.21	
	23+78.56		Crown Gr. ℄							–			1345.56	
	23+64.12		Right Fascia							14.0			1345.03	
H	24+15.59	Span #2 Face of Pier Beam	Left Fascia							22.0			1345.38	
	23+97.11		Crown Gr. ℄							–			1345.73	
	23+82.68		Right Fascia							22.0			1345.20	
I	24+17.03	℄ Brg. of Pier #2	Left Fascia										1345.39	
	23+98.56		Crown Gr. ℄										1345.73	
	23+84.12		Right Fascia										1345.21	
J	24+18.48	Span #3 Face of Pier Beam	Left Fascia							22.0			1345.41	
	24+00.00		Crown Gr. ℄							–			1345.75	
	23+85.57		Right Fascia							22.0			1345.22	
K	24+35.03	6/10 Point from Pier #2	Left Fascia							14.1			1345.56	
	24+16.56		Crown Gr. ℄							–			1345.90	
	24+02.12		Right Fascia							14.1			1345.37	
L	24+45.59	Interior Face of Abut. #2	Left Fascia							14.0			1345.65	
	24+27.11		Crown Gr. ℄							–			1346.00	
	24+12.68		Right Fascia							14.0			1345.47	
M	24+47.03	℄ Brg. of Abut. #2	Left Fascia										1345.66	
	24+28.56		Crown Gr. ℄										1346.00	
	24+14.12		Right Fascia										1345.48	

† Stationing shown from South to North

NOTE: The Contractor will turn in a completed copy of this table to the Design Engineer for review.

* It is assumed that piling have been driven to design bearing and checked by ENR formula (QA/QC). No allowance for pile settlement is included in crush.

Pour Dates (2)	
	Deck
	Left Rail (13)
	Right Rail (13)

Survey Data (1)(11)	
Bench Mark No.	Elevation
BM#2	1342.27
BM#4	1354.41

Crown Grade Profile (1)(12)	
23+28.56	VPI Station
1345.10	VPI Elevation
0.90	G1 %
N/A	G2 %
N/A	L in Stations

Slab Thickness (1)	
14"	Uniform Depth (inch)
8"	Haunch Depth @ Face of PB (inch)

Span Data (1)	
HL–93	Design Loading
30'	Span #1 (ft)
40'	Span #2 (ft)
2½"	Clear Cover (inch)

Roadway Data (1)(10)(13)	
18'	Deck Width (ft)(Ph2)
11'	Deck Width (ft)(Ph3)
1.60	% Slope Left (±)
1.60	% Slope Right (±)
30°0'0"	Skew (dd:mm:ss)

Camber (1)(17)	
0.0233'	Span #1 0.4 Point (ft)
0.0350'	Span #2 Midspan (ft)

Legend
TOF = Top of Formwork
TOC = Top of Concrete
QA = Quality Assurance
QC = Quality Control

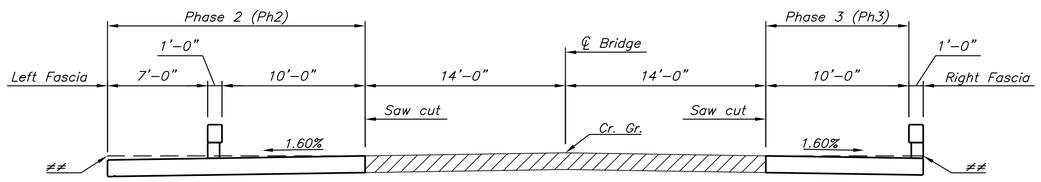

Exist. Bridge Remaining after Demolition

TYPICAL DECK SECTION
(Shown Normal to ℄ Prop. Imp.)

≠≠ The valves shown for the "DEAD LOAD CAMBER" shall be used at the Left & Right Fascia line. The Finish Screed line shall then extend to the surface of the existing slab at the "saw cut" line.

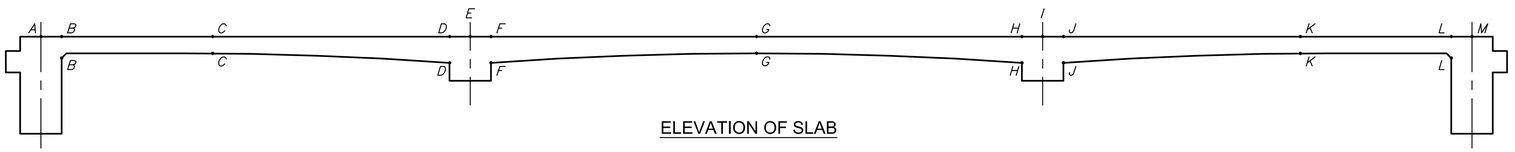

ELEVATION OF SLAB

(1) By the Design Engineer
(2) By the Contractor
(3) By Request
* (4) Based on hardwood shims, assume 6 joints with 1/16" crush (Take Up) per joint. Revise estimate if/when more accurate information becomes available. Ref;"Formwork for Concrete" Fifth Edition, by M.K. Hurd, Chapter 6
(5) (col 7 – col 6)x12
(6) Crush (Take Up) and camber must be included
(7) (col 10 – col 9)x12
(8) (col 10 – col 7)x12
(9) (col 13 – col 12)
(10) If transition falls on the bridge, then enter "Varies" for the % Slope
(11) From "Construction Layout" sheet
(12) If bridge is not on the vertical curve, enter Abutment #1 ℄ bearing elevation from the "Construction Layout" sheet. Represent a change in grade with G1 only.
(13) Looking Up–Station
(14) Out–to–Out
(15) Ignore Fillet
(16) Non–skewed bridges only require ℄ stations.
(17) Ignore theoretical camber at face of pier beams

MKEC
Wichita, KS • 316-684-9600

STREET IMPROVEMENTS FOR

127TH STREET EAST

FROM 13TH STREET NORTH TO 21ST STREET NORTH

©2017
MKEC Engineering
All Rights Reserved
www.mkec.com
These drawings and their contents, including, but not limited to, all concepts, designs, & ideas are the exclusive property of MKEC Engineering (MKEC), and may not be used or reproduced in any way without the express consent of MKEC.

SLAB ELEVATIONS

PROJECT NO.	472-85158
DATE	11/29/17
SCALE	NTS

DESIGNED	DRAWN	CHECKED
KJS	RAM	KJS

NO.	REVISION	DATE

SHEET NO.
85 OF 183

Sh. No. 85

J:\PROJECTS\2014\140104\090 - COW_127TH E 13TH TO 21ST\05-CIVIL\CAD\BRIDGE\140902D10.DWG

PLOTTED: Wednesday, November 29, 2017 @ 03:05PM

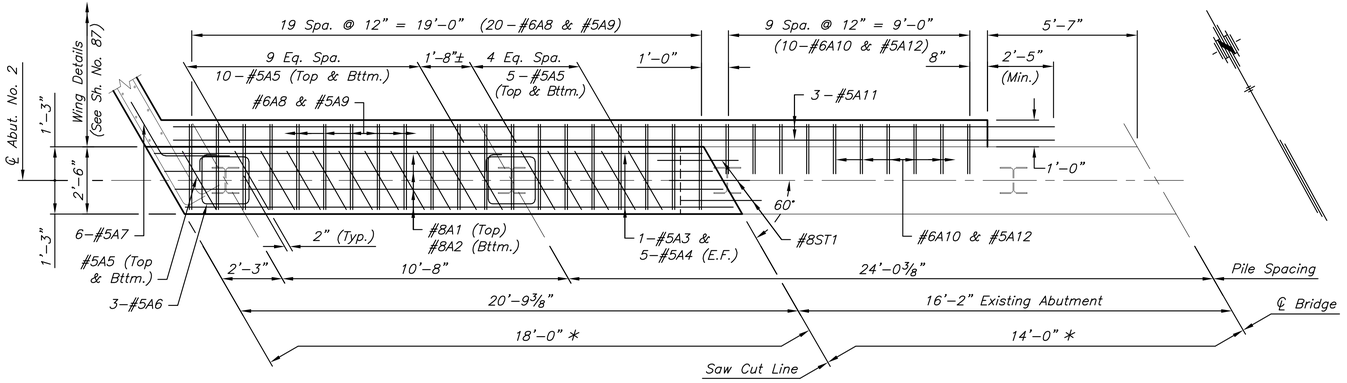

PLAN - ABUTMENT NO. 2 EXTENSION

* Measured perpendicular to ℄ Bridge

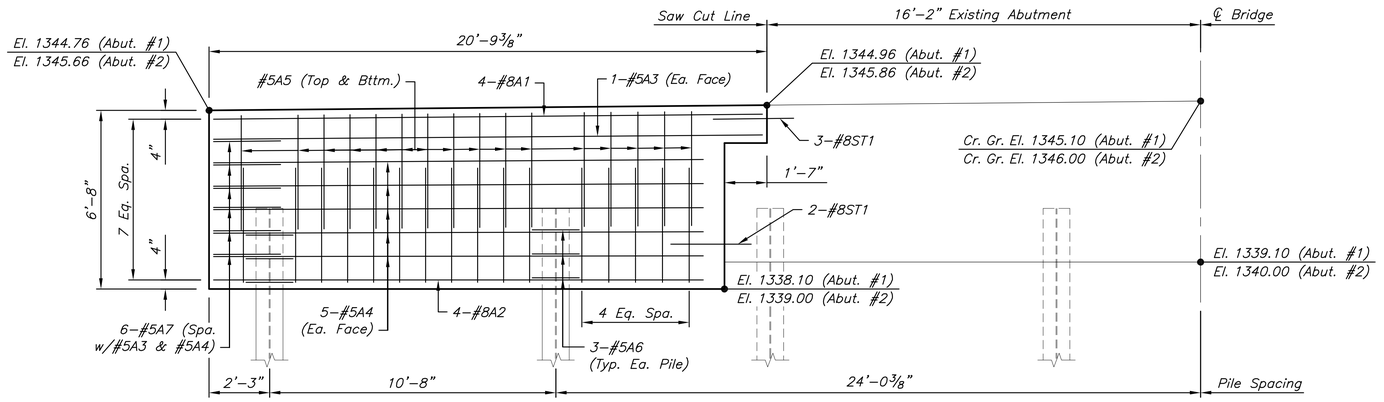

ELEVATION - ABUTMENT EXTENSION

Dimensioned along ℄ Abutment

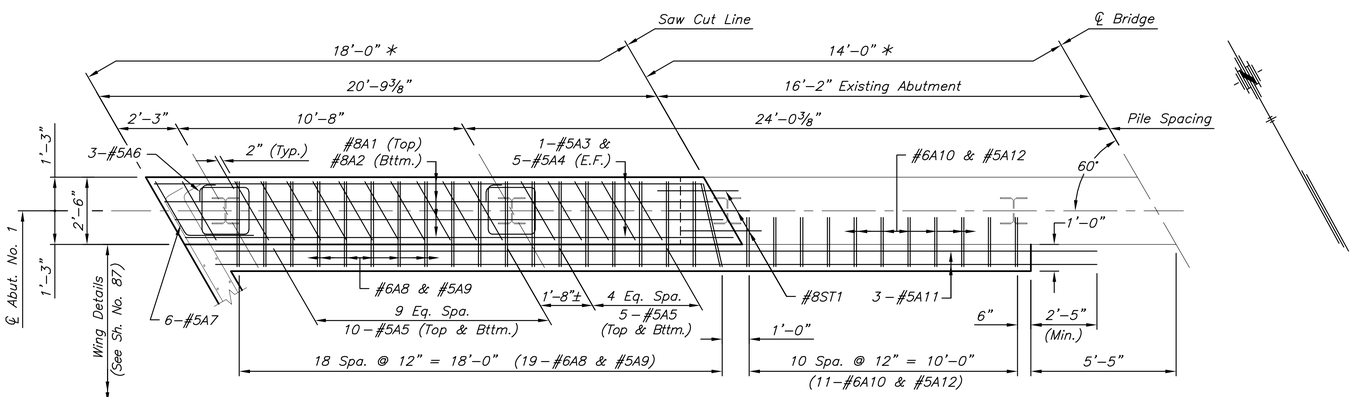

PLAN - ABUTMENT NO. 1 EXTENSION

* Measured perpendicular to ℄ Bridge

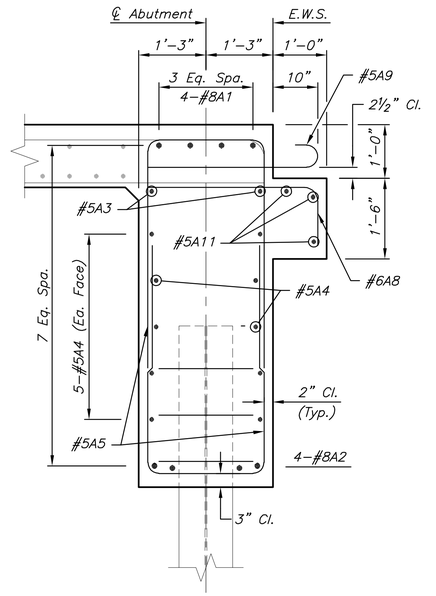

ABUTMENT TYPICAL SECTION

Shown Perpendicular to ℄ Abutment
(Abutment No. 1, Looking East)
(Abutment No. 2, Looking West)

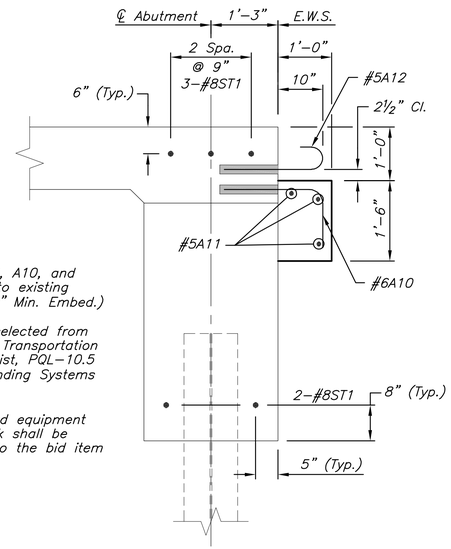

EXISTING ABUTMENT END ELEVATION

Shown Perpendicular to ℄ Abutment

NOTE:
Drill and Epoxy all ST1, A10, and A12 bars as shown into existing abutment concrete (12" Min. Embed.)

Epoxy Resin shall be selected from Kansas Department of Transportation Prequalified Materials List, PQL-10.5 "Epoxy-Resin-Base Bonding Systems for Concrete".

All materials, labor, and equipment necessary for this work shall be considered subsidiary to the bid item "Reinforcing Steel".

MKEC
Wichita, KS • 316-684-9600

STREET IMPROVEMENTS FOR

127TH STREET EAST

FROM 13TH STREET NORTH TO 21ST STREET NORTH

©2017
MKEC Engineering
All Rights Reserved
www.mkec.com
These drawings and their contents, including, but not limited to, all concepts, designs, & ideas are the exclusive property of MKEC Engineering (MKEC), and may not be used or reproduced in any way without the express consent of MKEC.

PHASE 2
ABUTMENT EXT.
DETAILS

PROJECT NO.	472-85158
DATE	11/29/17
SCALE	3/8"=1'

DESIGNED	DRAWN	CHECKED
KJS	DMU	KJS

NO.	REVISION	DATE

SHEET NO.

86 OF 183

Sh. No. 86

J:\PROJECTS\2014\140104260 - COV_127TH E 13TH TO 21ST\05-CIVIL\CAD\BRIDGE\142602D01.DWG

PLOTTED: Wednesday, November 29, 2017 @ 03:06PM

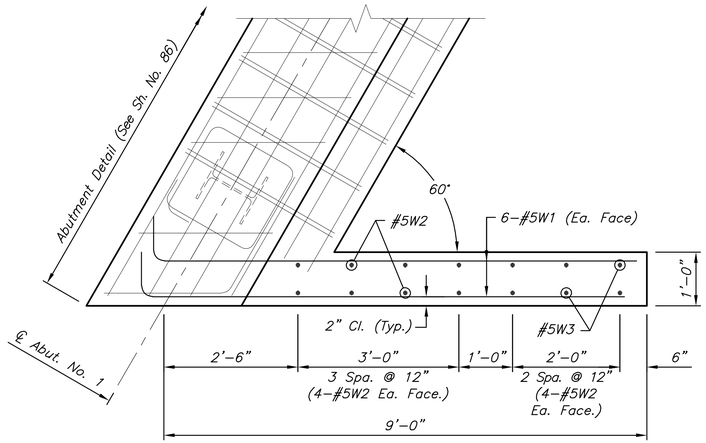

PLAN - ABUTMENT WING

Phase 2 – Abutment No. 1

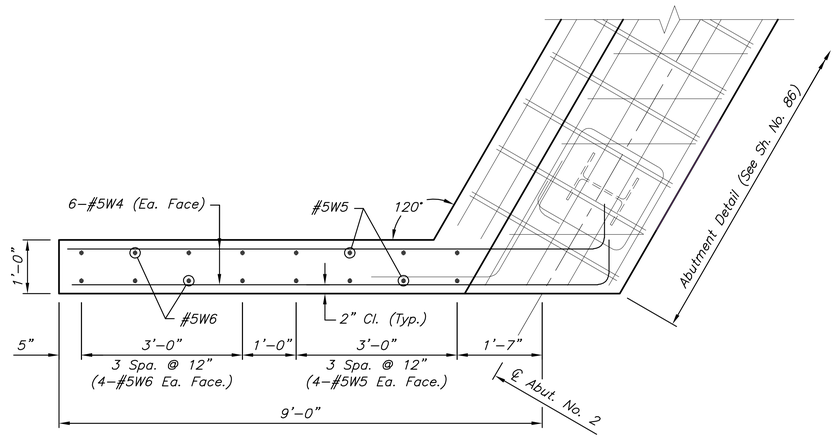

PLAN - ABUTMENT WING

Phase 2 – Abutment No. 2

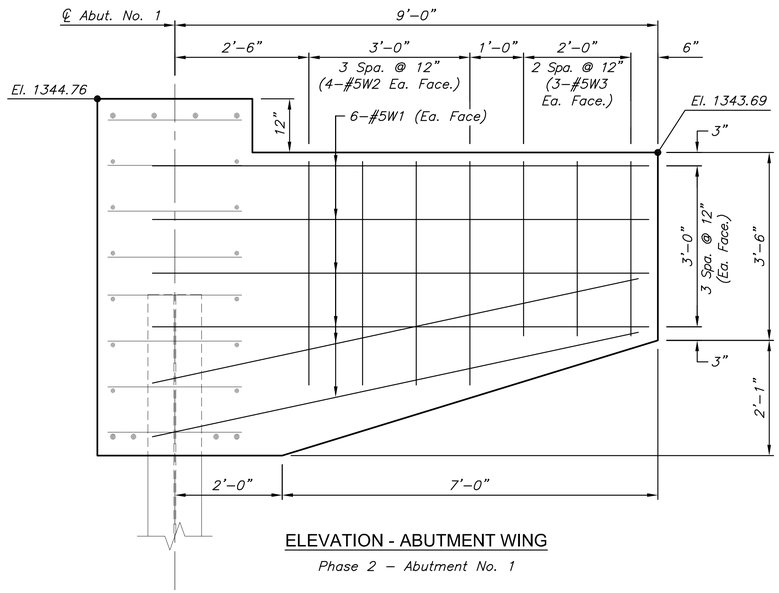

ELEVATION - ABUTMENT WING

Phase 2 – Abutment No. 1

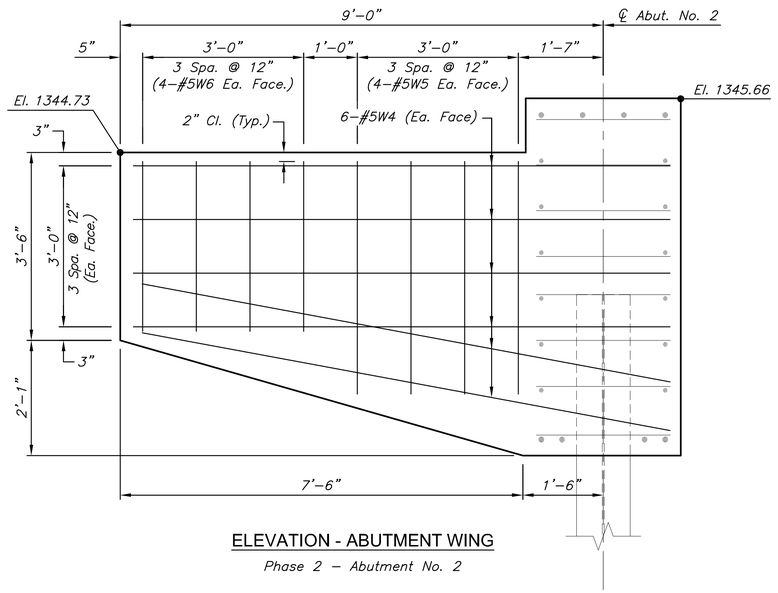

ELEVATION - ABUTMENT WING

Phase 2 – Abutment No. 2

J:\PROJECTS\2014\140104260 - COV_127TH E 13TH TO 21ST\05-CIVIL\CAD\BRIDGE\142602D02.DWG

MKEC
Wichita, KS • 316-684-9600

STREET IMPROVEMENTS FOR

127TH STREET EAST

FROM 13TH STREET NORTH TO 21ST STREET NORTH

©2017
MKEC Engineering
All Rights Reserved
www.mkec.com
These drawings and their contents, including, but not limited to, all concepts, designs, & ideas are the exclusive property of MKEC Engineering (MKEC), and may not be used or reproduced in any way without the express consent of MKEC.

PHASE 2 ABUTMENT WING DETAILS

PROJECT NO.	472-85158
DATE	11/29/17
SCALE	3/4"=1'

DESIGNED	DRAWN	CHECKED
KJS	DMU	KJS

NO.	REVISION	DATE

SHEET NO.

87 OF 183

PLOTTED: Wednesday, November 29, 2017 @ 03:06PM

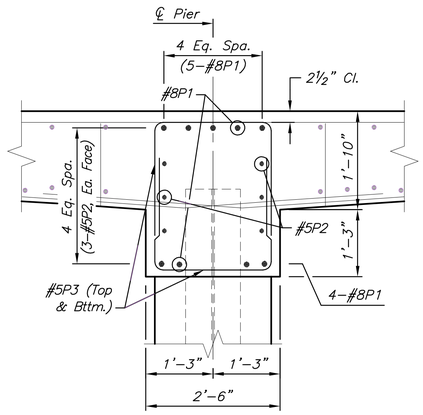

TYPICAL SECTION - PIER BEAM

Shown Perpendicular to ℄ Pier

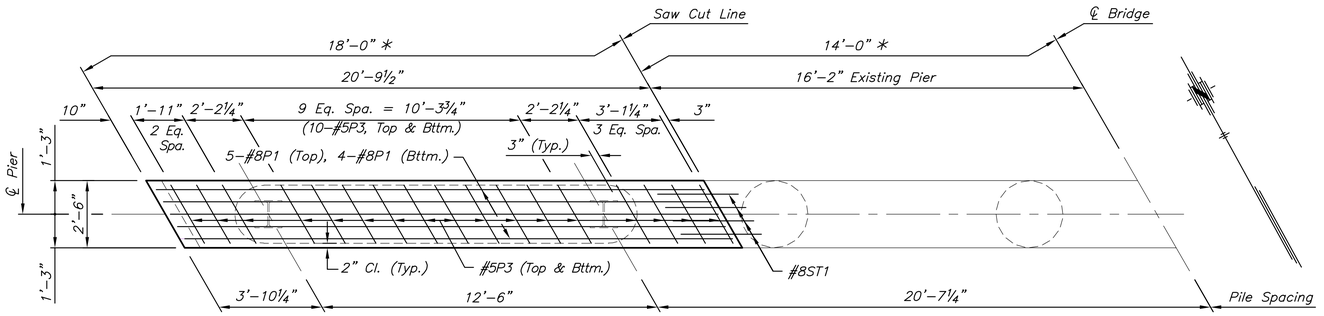

PLAN - PIER EXTENSION

* *Measured perpendicular to ℄ Bridge*

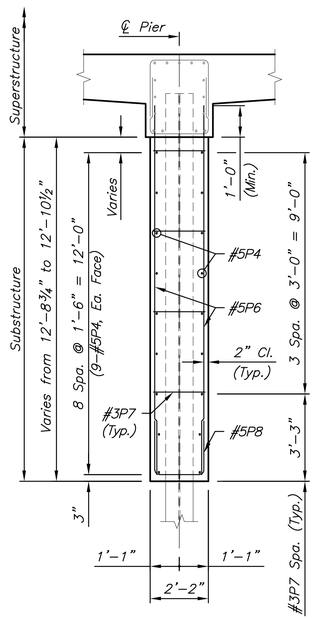

SECTION B-B

SUBSTRUCTURE CONCRETE	
Concrete (Grade 4.0) (AE)	
Location	*Quantity*
Pier No. 1	*15.0 Cu. Yds.*
Pier No. 2	*15.0 Cu. Yds.*

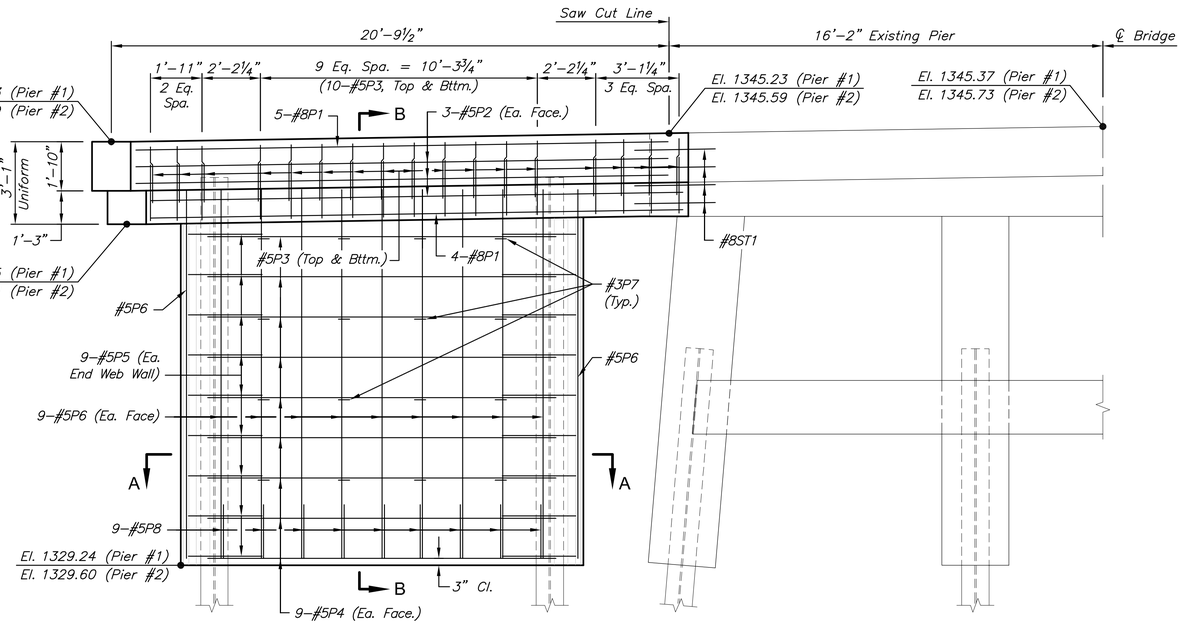

ELEVATION - PIER EXTENSION

Dimensioned along ℄ Pier (Looking Forward Station)
(Pier Beam reinforcing is shown normal to South face)

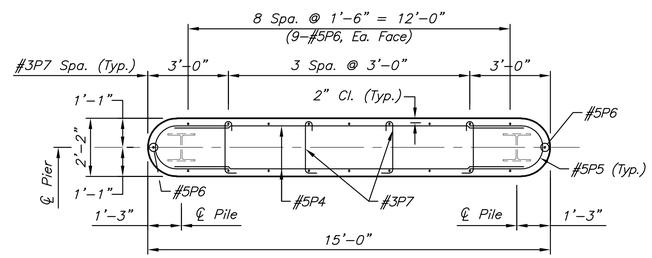

SECTION A-A

NOTE:
Drill and Epoxy all ST1 bars as shown into existing pier concrete (12" Min. Embed.)

Epoxy Resin shall be selected from Kansas Department of Transportation Prequalified Materials List, PQL–10.5 "Epoxy–Resin–Base Bonding Systems for Concrete".

All materials, labor, and equipment necessary for this work shall be considered subsidiary to the bid item "Reinforcing Steel".

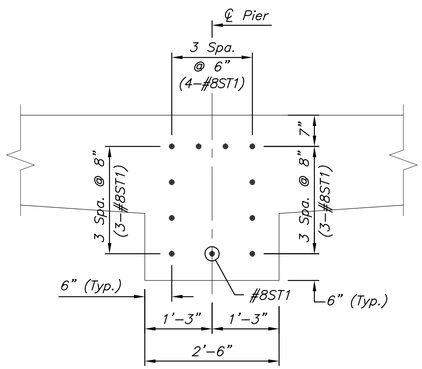

EXISTING PIER BEAM END ELEVATION

Shown Perpendicular to ℄ Pier

MKEC
Wichita, KS • 316-684-9600

STREET IMPROVEMENTS FOR

127TH STREET EAST

FROM 13TH STREET NORTH TO 21ST STREET NORTH

©2017
MKEC Engineering
All Rights Reserved
www.mkec.com
These drawings and their contents, including, but not limited to, all concepts, designs, & ideas are the exclusive property of MKEC Engineering (MKEC), and may not be used or reproduced in any way without the express consent of MKEC.

PHASE 2
PIER EXT.
DETAILS

PROJECT NO.	472-85158
DATE	11/29/17
SCALE	NTS

DESIGNED	DRAWN	CHECKED
KJS	DMU	KJS

NO.	REVISION	DATE

SHEET NO.

88 OF 183

Sh. No. 88

J:\PROJECTS\2014\140104\299 - COW_127TH E 13TH TO 21ST\05-CIVIL\CAD\BRIDGE\140292Z003.DWG

PLOTTED: Wednesday, November 29, 2017 @ 03:07PM

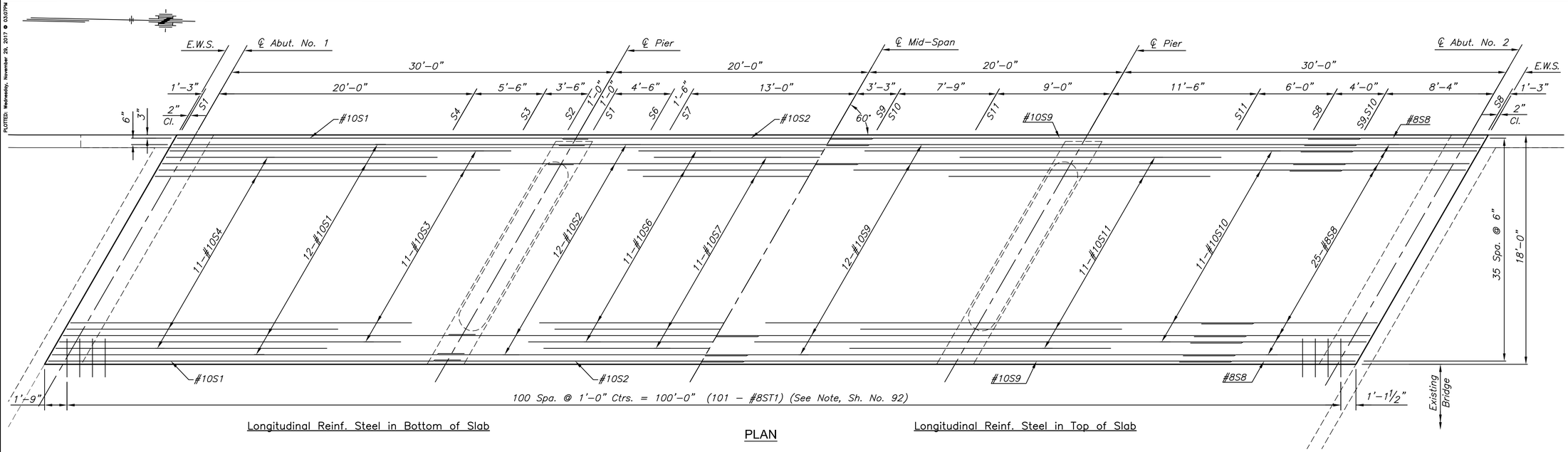

Longitudinal Reinf. Steel in Bottom of Slab

PLAN

Longitudinal Reinf. Steel in Top of Slab

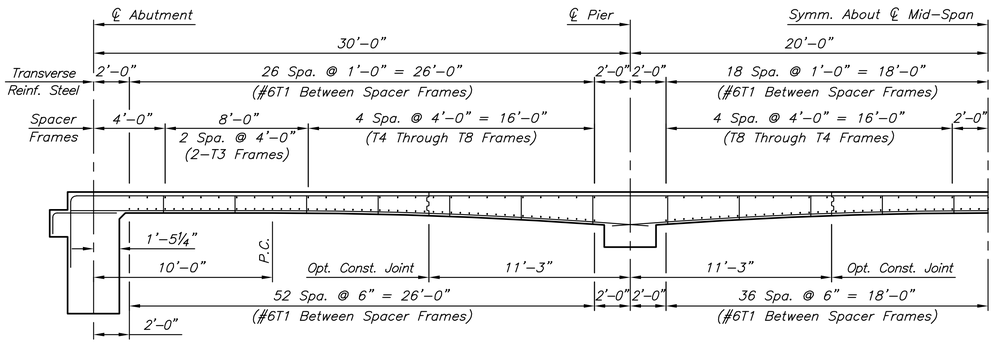

HALF LONGITUDINAL SECTION

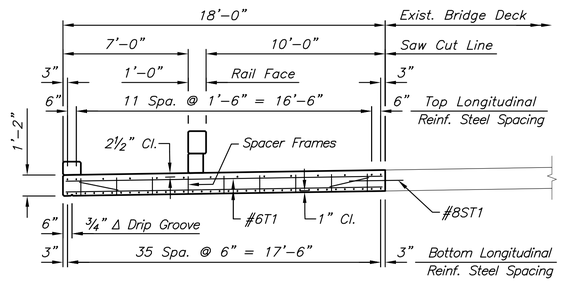

TYPICAL SECTION

At Mid–Span

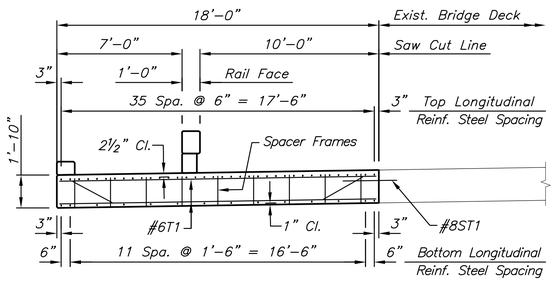

TYPICAL SECTION

At Face of Pier Beam

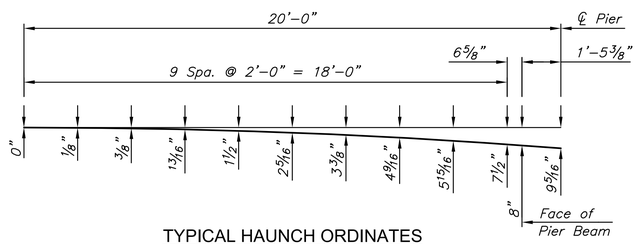

TYPICAL HAUNCH ORDINATES

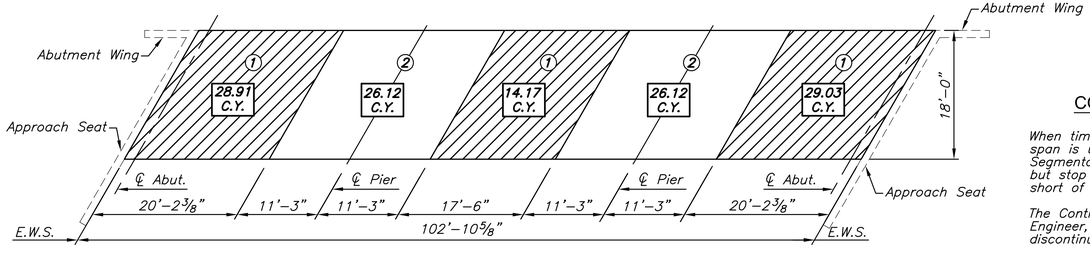

CONCRETE PLACING SEQUENCE DIAGRAM

(End Span concrete quantities include Abutment Wing & Approach Seat)

NOTE

Refer to Sh. No. 92 for "Typical Dead Load Camber Diagram at Tenth Points".

CONCRETE PLACING SEQUENCE

When timber falsework with greater than 12'–0" clear span is used, follow the placing sequence shown. Segmental, combined or continuous pours are allowed, but stop a discontinuous pour at a construction joint short of a pier.

The Contractor, subject to the approval of the Engineer, may use a continuous pour or may discontinue the pour at any construction joint shown.

The Contractor may place the corral rail continuously from one end of the bridge to the other.

Quantities shown do not include Corral Rail concrete.

MKEC
Wichita, KS • 316-684-9600

STREET IMPROVEMENTS FOR

127TH STREET EAST

FROM 13TH STREET NORTH TO 21ST STREET NORTH

©2017
MKEC Engineering
All Rights Reserved
www.mkec.com
These drawings and their contents, including, but not limited to, all concepts, designs, & ideas are the exclusive property of MKEC Engineering (MKEC), and may not be used or reproduced in any way without the express consent of MKEC.

PHASE 2 SUPERSTRUCTURE DETAILS

PROJECT NO.	472-85158
DATE	11/29/17
SCALE	1/4"=1'

DESIGNED	DRAWN	CHECKED
KJS	DMU	KJS

NO.	REVISION	DATE

SHEET NO.

89 OF 183

Sh. No. 89

J:\PROJECTS\2014\140104\260 - COV_127TH E 13TH TO 21ST\05-CIVIL\CAD\BRIDGE\142602D04.DWG

PLOTTED: Wednesday, November 29, 2017 @ 03:08PM

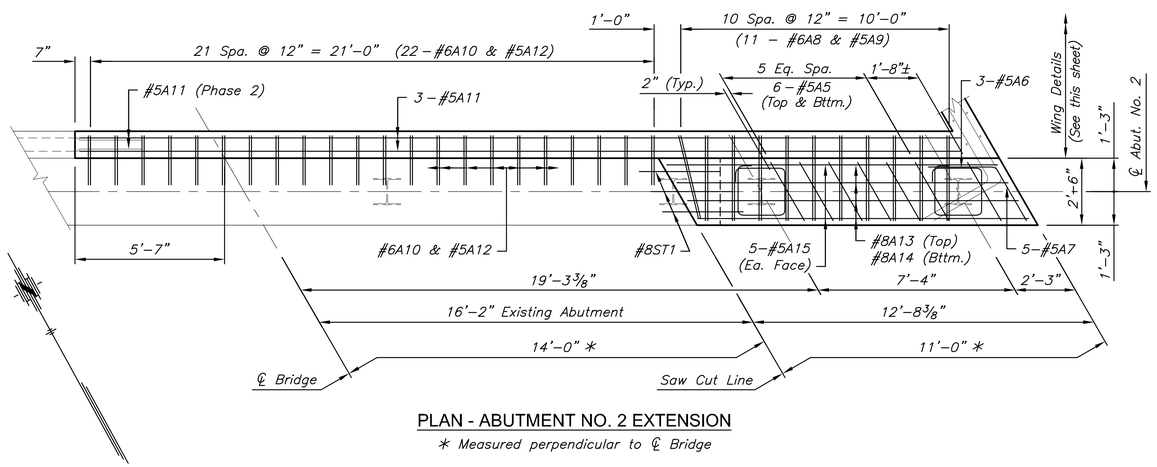

PLAN - ABUTMENT NO. 2 EXTENSION

* Measured perpendicular to ℄ Bridge

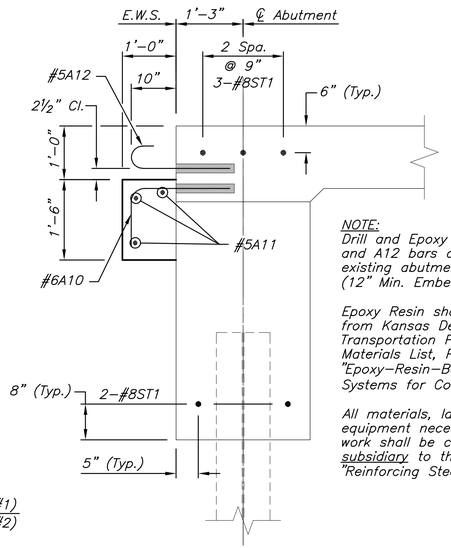

EXISTING ABUTMENT END ELEVATION

Shown Perpendicular to ℄ Abutment

NOTE:
Drill and Epoxy all ST1, A10, and A12 bars as shown into existing abutment concrete (12" Min. Embed.)

Epoxy Resin shall be selected from Kansas Department of Transportation Prequalified Materials List, PQL-10.5 "Epoxy-Resin-Base Bonding Systems for Concrete".

All materials, labor, and equipment necessary for this work shall be considered subsidiary to the bid item "Reinforcing Steel".

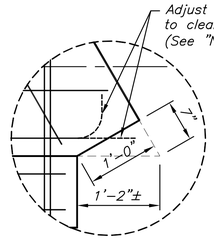

DETAIL A

Abutment No. 1
(Corner Blockout for Retaining Wall)

NOTE A:
The Contractor may realign, field bend, or field cut #8A13, #8A14, and #5A15 reinforcing bars as required to provide 2" Cl. If reinforcing steel is field cut, the Contractor shall patch epoxy coating at the exposed ends of rebar according to KDOT Specifications. The patching material shall be selected from Kansas Department of Transportation Prequalified Materials List, PQL-10.2 "Patching Materials for Epoxy Coatings".

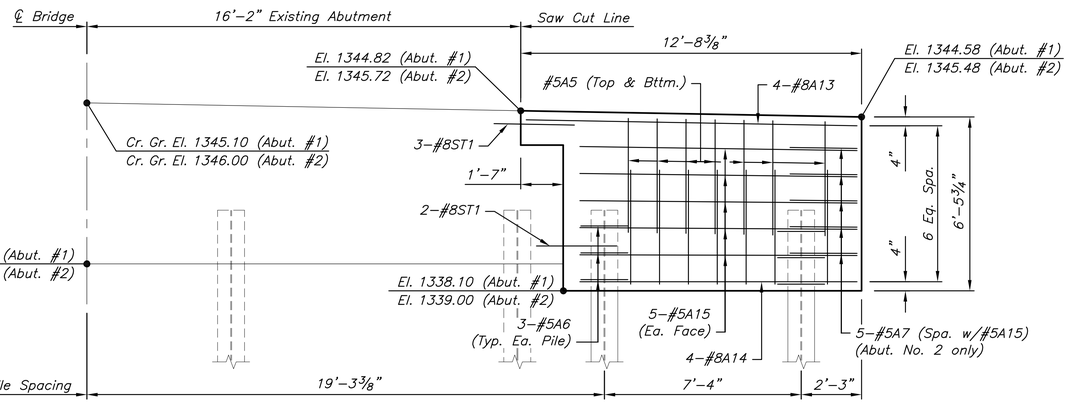

ELEVATION - ABUTMENT EXTENSION

Dimensioned along ℄ Abutment

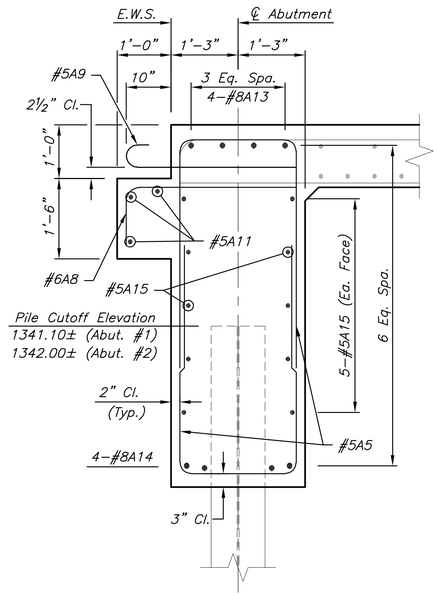

ABUTMENT TYPICAL SECTION

Shown Perpendicular to ℄ Abutment
(Abutment No. 1, Looking West)
(Abutment No. 2, Looking East)

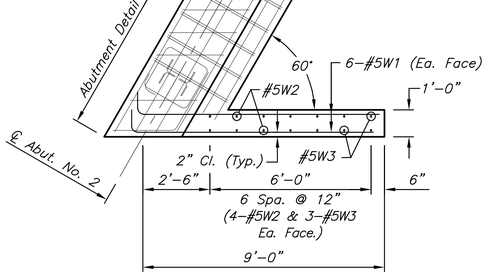

PLAN - ABUTMENT WING

Phase 3 - Abutment No. 2

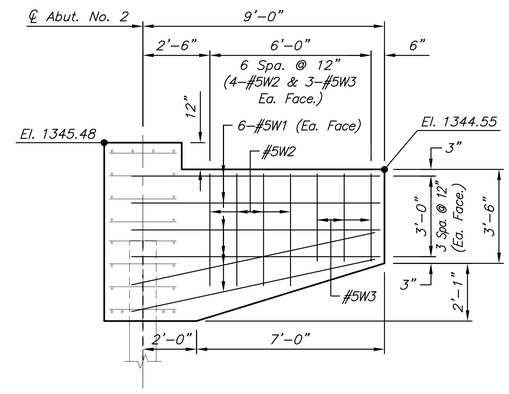

ELEVATION - ABUTMENT WING

Phase 3 - Abutment No. 2

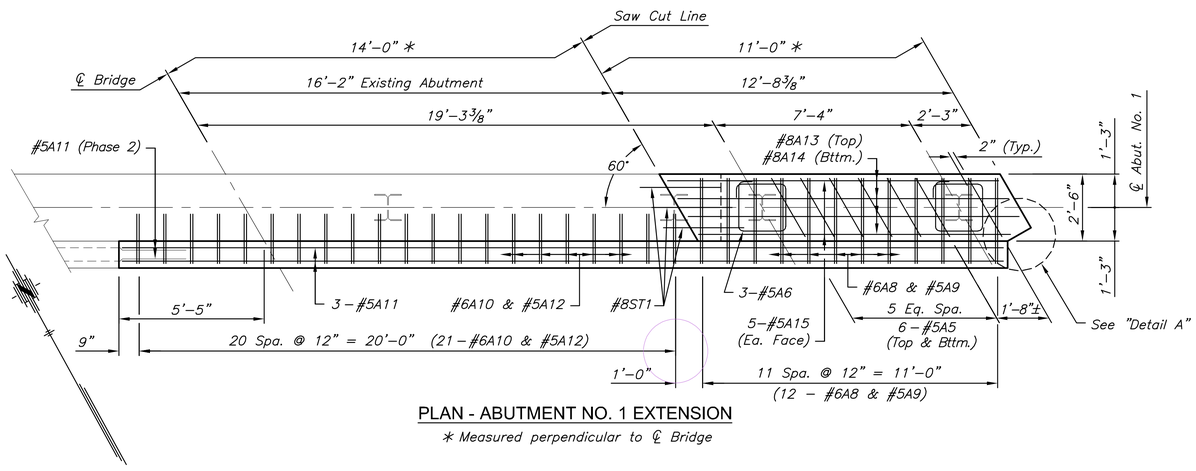

PLAN - ABUTMENT NO. 1 EXTENSION

* Measured perpendicular to ℄ Bridge

J:\PROJECTS\2014\1401940290 - COW_127TH E 13TH TO 21ST\05-CIVIL\CAD\BRIDGE\142602D05.DWG

MKEC
Wichita, KS • 316-684-9600

STREET IMPROVEMENTS FOR

127TH STREET EAST

FROM 13TH STREET NORTH TO 21ST STREET NORTH

©2017
MKEC Engineering
All Rights Reserved
www.mkec.com
These drawings and their contents, including, but not limited to, all concepts, designs, & ideas are the exclusive property of MKEC Engineering (MKEC), and may not be used or reproduced in any way without the express consent of MKEC.

PHASE 3
ABUTMENT EXT. DETAILS

PROJECT NO.	472-85158
DATE	11/29/17
SCALE	3/8"=1'

DESIGNED	DRAWN	CHECKED
KJS	DMU	KJS

NO.	REVISION	DATE

SHEET NO.
90 OF 183

Sh. No. 90

PLOTTED: Wednesday, November 29, 2017 @ 03:09PM

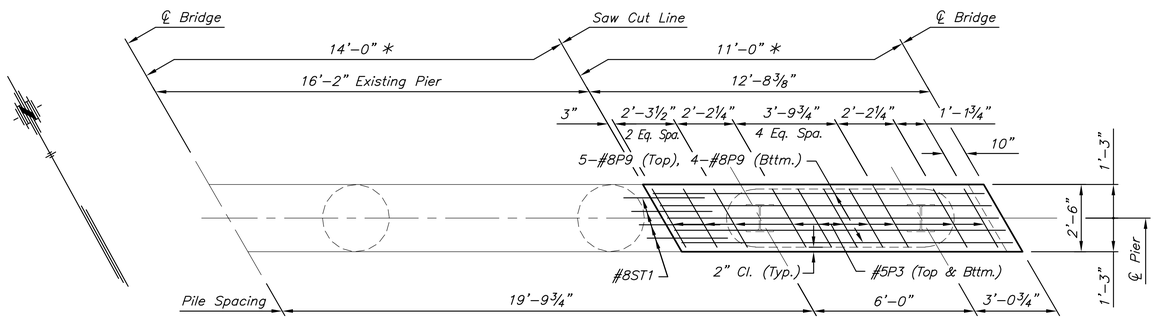

PLAN - PIER EXTENSION

* Measured perpendicular to ℄ Bridge

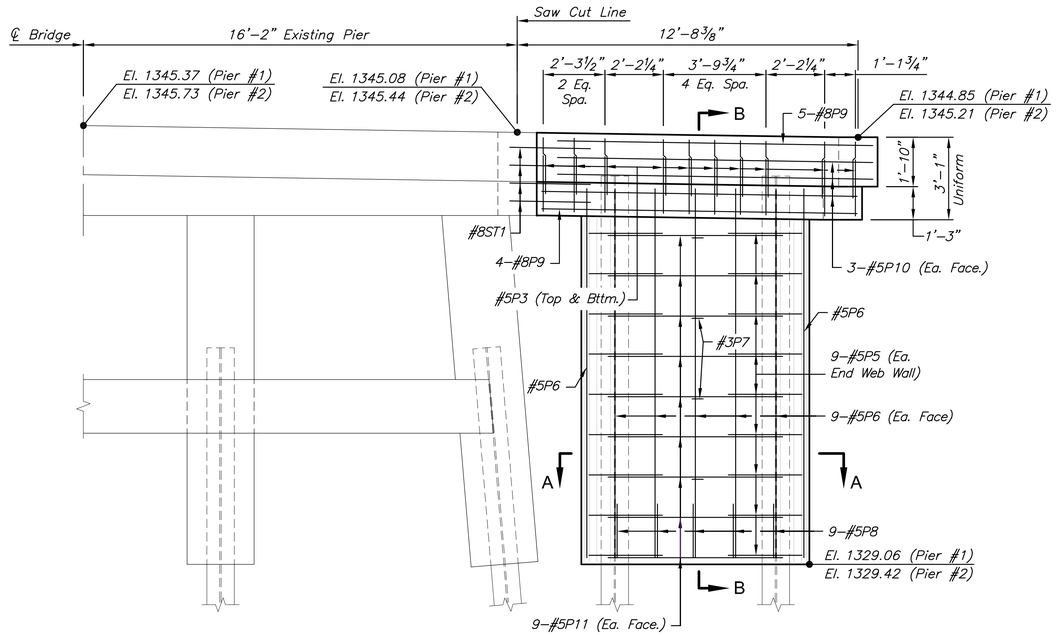

ELEVATION - PIER EXTENSION

Dimensioned along ℄ Pier (Looking Forward Station)
(Pier Beam reinforcing is shown normal to South face)

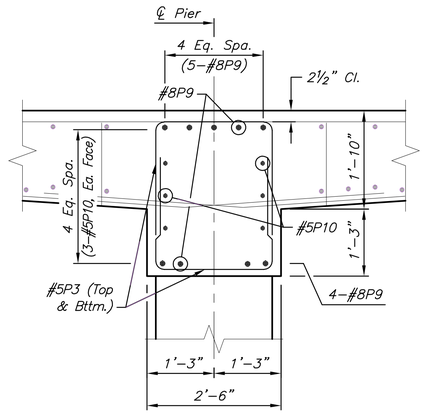

TYPICAL SECTION - PIER BEAM

Shown Perpendicular to ℄ Pier

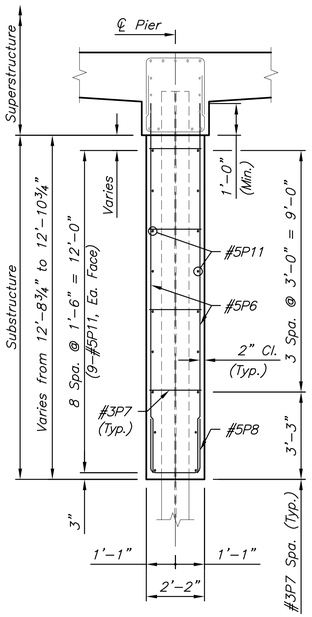

SECTION B-B

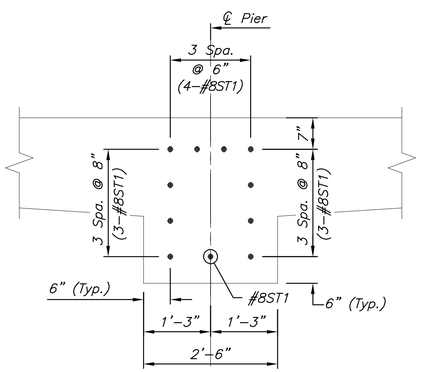

EXISTING PIER BEAM END ELEVATION

Shown Perpendicular to ℄ Pier

NOTE:
Drill and Epoxy all ST1 bars as shown into existing pier concrete (12" Min. Embed.)

Epoxy Resin shall be selected from Kansas Department of Transportation Prequalified Materials List, PQL–10.5 "Epoxy–Resin–Base Bonding Systems for Concrete".

All materials, labor, and equipment necessary for this work shall be considered subsidiary to the bid item "Reinforcing Steel".

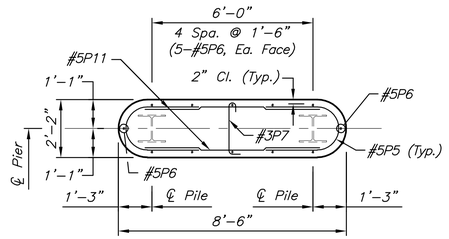

SECTION A-A

SUBSTRUCTURE CONCRETE	
Concrete (Grade 4.0) (AE)	
Location	*Quantity*
Pier No. 1	*8.3 Cu. Yds.*
Pier No. 2	*8.3 Cu. Yds.*

MKEC
Wichita, KS • 316-684-9600

STREET IMPROVEMENTS FOR

127TH STREET EAST

FROM 13TH STREET NORTH TO 21ST STREET NORTH

©2017
MKEC Engineering
All Rights Reserved
www.mkec.com
These drawings and their contents, including, but not limited to, all concepts, designs, & ideas are the exclusive property of MKEC Engineering (MKEC), and may not be used or reproduced in any way without the express consent of MKEC.

PHASE 3
PIER EXT. DETAILS

PROJECT NO.	472-85158
DATE	11/29/17
SCALE	3/8"=1'

DESIGNED	DRAWN	CHECKED
KJS	DMU	KJS

NO.	REVISION	DATE

SHEET NO.

91 OF 183

Sh. No. 91

J:\PROJECTS\2014\140194\299 - COW_127TH E 13TH TO 21ST\06-CIVIL\CAD\BRIDGE\142992D06.DWG

PLOTTED: Wednesday, November 29, 2017 @ 03:10PM

Longitudinal Reinf. Steel in Bottom of Slab

Longitudinal Reinf. Steel in Top of Slab

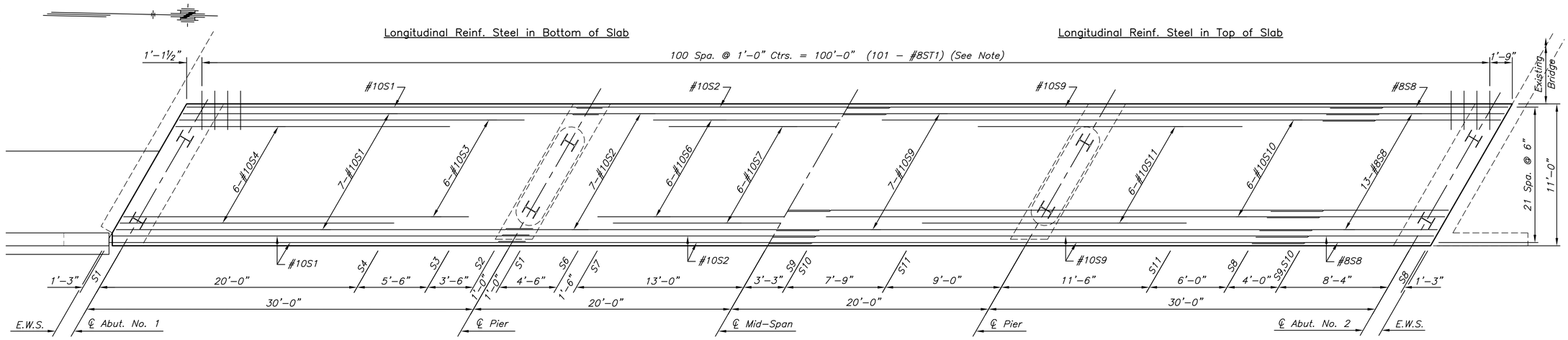

PLAN

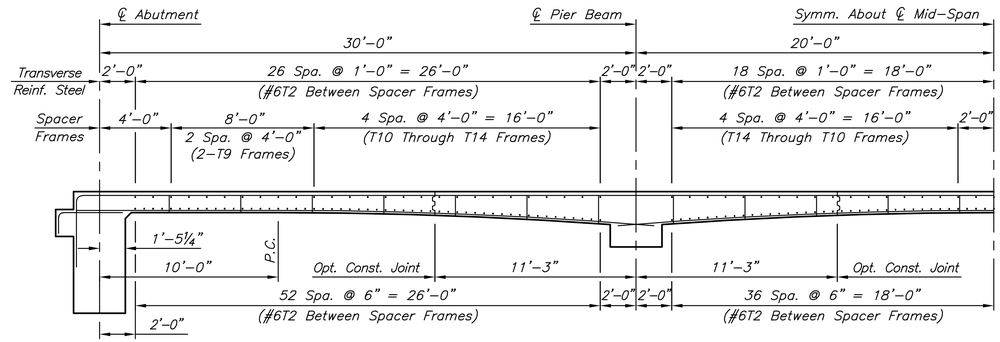

HALF LONGITUDINAL SECTION

(See Sh. No. 89 for "Typical Haunch Ordinates")

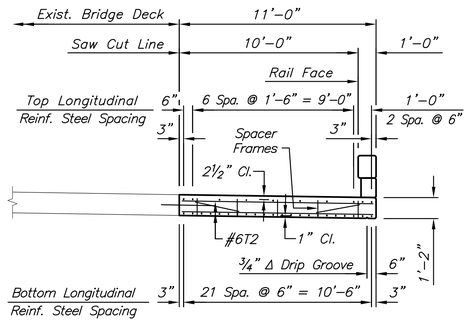

TYPICAL SECTION

At Mid–Span

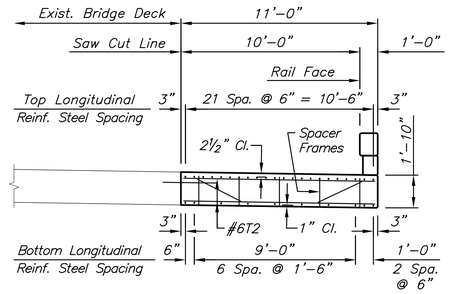

TYPICAL SECTION

At Face of Pier Beam

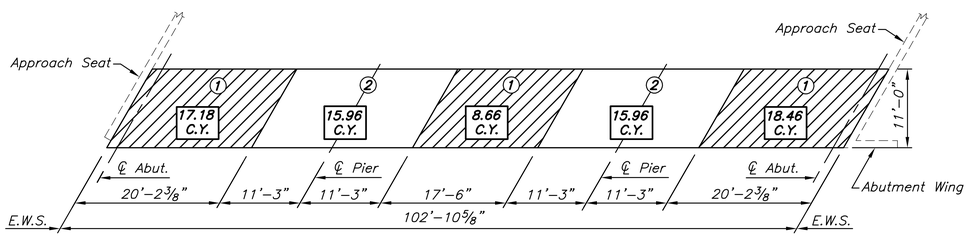

CONCRETE PLACING SEQUENCE DIAGRAM

(End Span concrete quantities include Abutment Wing & Approach Seat)

NOTE:
Drill and Epoxy all ST1 bars as shown into existing bridge slab concrete (12" Min. Embed.)

Epoxy Resin shall be selected from Kansas Department of Transportation Prequalified Materials List, PQL–10.5 "Epoxy–Resin–Base Bonding Systems for Concrete".

All materials, labor, and equipment necessary for this work shall be considered subsidiary to the bid item "Reinforcing Steel".

CONCRETE PLACING SEQUENCE

When timber falsework with greater than 12'–0" clear span is used, follow the placing sequence shown. Segmental, combined or continuous pours are allowed, but stop a discontinuous pour at a construction joint short of a pier.

The Contractor, subject to the approval of the Engineer, may use a continuous pour or may discontinue the pour at any construction joint shown.

The Contractor may place the corral rail continuously from one end of the bridge to the other.

Quantities shown do not include Corral Rail concrete.

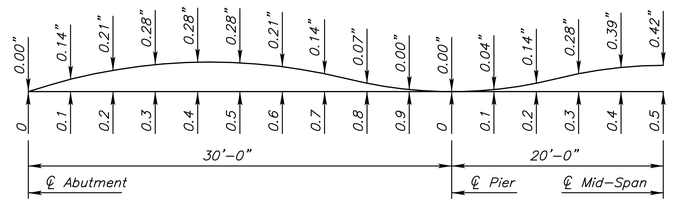

TYPICAL DEAD LOAD CAMBER DIAGRAM AT TENTH POINTS

Long Term Deflections = Initial Deflections x 3.5
(Initial Deflections Based on E_C = 3.605 x 10^6 p.s.i.)
(camber values in inches)

MKEC
Wichita, KS • 316-684-9600

STREET IMPROVEMENTS FOR

127TH STREET EAST

FROM 13TH STREET NORTH TO 21ST STREET NORTH

©2017
MKEC Engineering
All Rights Reserved
www.mkec.com
These drawings and their contents, including, but not limited to, all concepts, designs, & ideas are the exclusive property of MKEC Engineering (MKEC), and may not be used or reproduced in any way without the express consent of MKEC.

PHASE 3
SUPERSTRUCTURE DETAILS

PROJECT NO.	472-85158
DATE	11/29/17
SCALE	1/4"=1'

DESIGNED	DRAWN	CHECKED
KJS	DMU	KJS

NO.	REVISION	DATE

SHEET NO.

92 OF 183

Sh. No. 92

J:\PROJECTS\2014\140104\0290 - CON_127TH E. 13TH TO 21ST\05-CIVIL\CAD\BRIDGE\142902D07.DWG

PLOTTED: Wednesday, November 29, 2017 @ 03:11PM

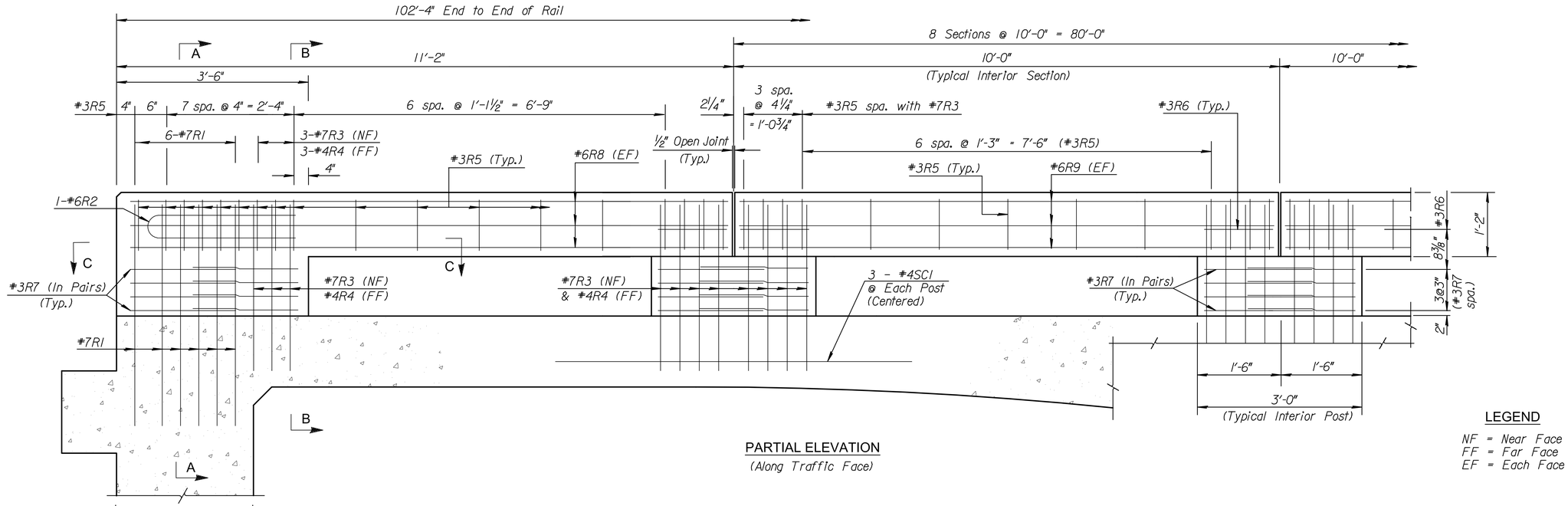

PARTIAL ELEVATION
(Along Traffic Face)

LEGEND
NF = Near Face
FF = Far Face
EF = Each Face

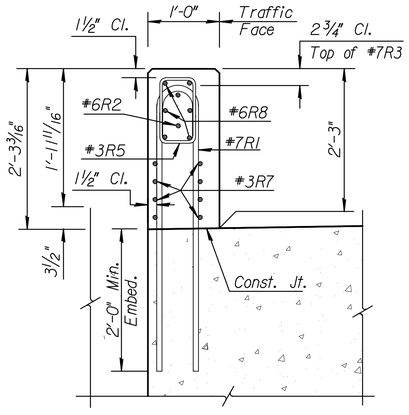

SECTION A-A
(Phase 3 Rail Shown)
(Abutment Extends beyond Phase 2 Rail)

SUPERSTRUCTURE CONCRETE	
Concrete (Grade 4.0) (AE) (SA)	
Location	Quantity
Phase 2	5.60 Cu. Yds.
Phase 3	5.60 Cu. Yds.

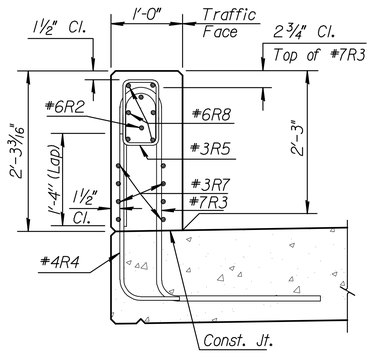

SECTION B-B

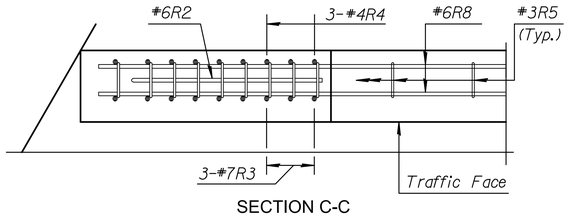

SECTION C-C
(South End of Phase 2 Rail & North End of Phase 3 Rail)
(Traffic Face and Clr. for Reinforcing mirrored for other ends)

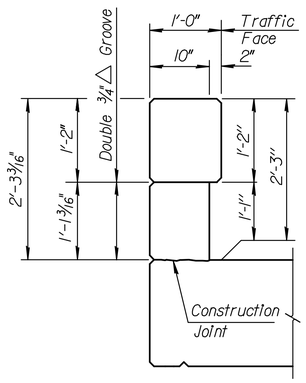

TYPICAL INTERIOR POST

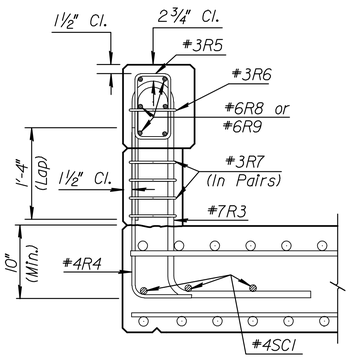

SECTION THRU POST

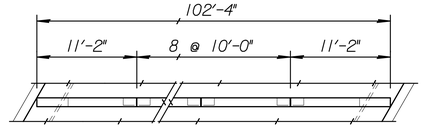

WEST RAIL PLAN

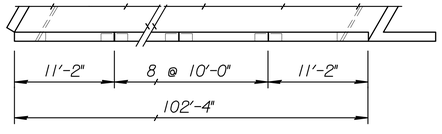

EAST RAIL PLAN

MKEC
Wichita, KS • 316-684-9600

STREET IMPROVEMENTS FOR

127TH STREET EAST

FROM 13TH STREET NORTH TO 21ST STREET NORTH

©2017
MKEC Engineering
All Rights Reserved
www.mkec.com
These drawings and their contents, including, but not limited to, all concepts, designs, & ideas are the exclusive property of MKEC Engineering (MKEC), and may not be used or reproduced in any way without the express consent of MKEC.

CORRAL RAIL DETAILS

PROJECT NO.	472-85158
DATE	11/29/17
SCALE	NTS

DESIGNED	DRAWN	CHECKED
KJS	DMU	KJS

NO.	REVISION	DATE

SHEET NO.
93 OF 183

Sh. No. 93

J:\PROJECTS\2014\1401940290 - COW_127TH E 13TH TO 21ST\05-CIVIL\CAD\BRIDGE\142922D08.DWG

PLOTTED: Wednesday, November 29, 2017 @ 03:11PM

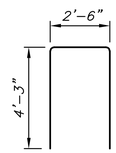

A5

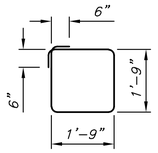

A6

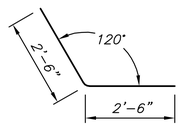

A7

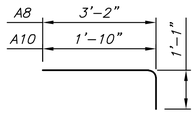

A8 & A10

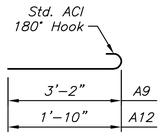

A9 & A12

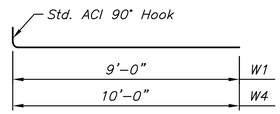

W1 & W4

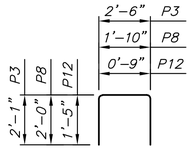

P3, P8, & P12

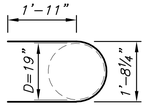

P5

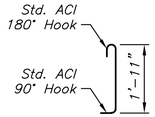

P7

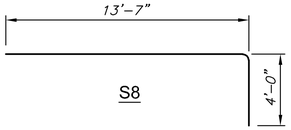

S8

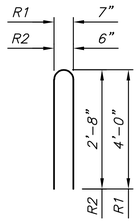

R1 & R2

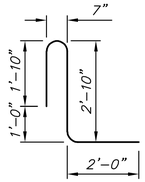

R3

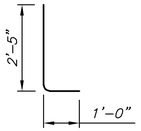

R4

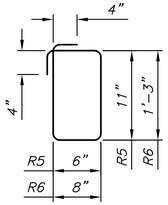

R5 & R6

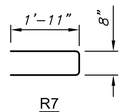

R7

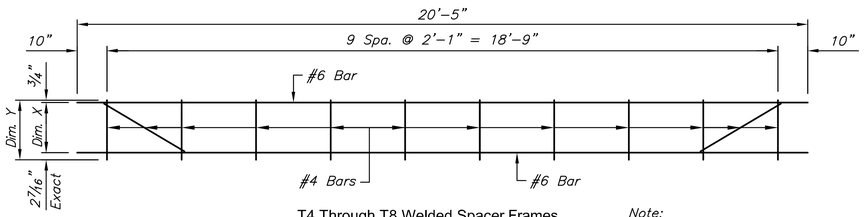

T4 Through T8 Welded Spacer Frames

Note:
Dim. X is out to out and is an exact dim. See Detail A.

SPACER FRAMES (Epoxy–Coated)			
Mark	No. Ea.	Dim. X	Dim. Y
T3, T9	4	7 15/16"	11 1/8"
T4, T10	4	7 3/4"	10 15/16"
T5, T11	4	8 7/16"	11 5/8"
T6, T12	4	9 15/16"	1'–1 1/8"
T7, T13	4	1'–0 3/16"	1'–3 3/8"
T8, T14	4	1'–3 3/16"	1'–6 3/8"

Weight of Spacer Frames included in the weight of Reinforcing Steel.

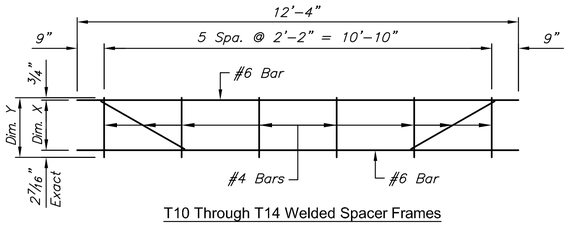

T10 Through T14 Welded Spacer Frames

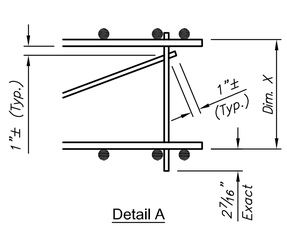

Detail A

BILL OF REINFORCING STEEL - PHASE 2
(Grade 60, Epoxy–Coated)

	Straight Bars				Bent Bars			
	Mark	Size	No.	Length	Mark	Size	No.	Length
Abutment No. 1	A1	#8	4	20'–5"	A8	#6	19	4'–3"
	A2	#8	4	18'–3"	A10	#6	11	2'–11"
	ST1	#8	5	3'–0"	A5	#5	32	11'–0"
	A3	#5	2	20'–5"	A6	#5	6	8'–0"
	A4	#5	10	18'–3"	A7	#5	6	5'–0"
	A11	#5	3	32'–10"	A9	#5	19	3'–9"
	W2	#5	8	4'–2"	A12	#5	11	2'–5"
	W3	#5	6	3'–3"	W1	#5	12	9'–10"
Abutment No. 2	A1	#8	4	20'–5"	A8	#6	20	4'–3"
	A2	#8	4	18'–3"	A10	#6	10	2'–11"
	ST1	#8	5	3'–0"	A5	#5	32	11'–0"
	A3	#5	2	20'–5"	A6	#5	6	8'–0"
	A4	#5	10	18'–3"	A7	#5	6	5'–0"
	A11	#5	3	32'–10"	A9	#5	20	3'–9"
	W5	#5	8	4'–4"	A12	#5	10	2'–5"
	W6	#5	8	3'–2"	W4	#5	12	10'–10"
Pier No. 1	P1	#8	9	19'–10"	P3	#5	34	6'–8"
	ST1	#8	11	3'–0"	P5	#5	18	6'–4"
	P2	#5	6	19'–10"	P8	#5	9	5'–10"
	P4	#5	18	13'–0"	P7	#3	16	2'–10"
	P6	#5	20	13'–9"				
Pier No. 2	P1	#8	9	19'–10"	P3	#5	34	6'–8"
	ST1	#8	11	3'–0"	P5	#5	18	6'–4"
	P2	#5	6	19'–10"	P8	#5	9	5'–10"
	P4	#5	18	13'–0"	P7	#3	16	2'–10"
	P6	#5	20	13'–9"				
Deck Slab	S1	#10	28	32'–3"	S8	#8	54	17'–7"
	S2	#10	14	42'–0"	P12	#5	104	3'–7"
	S3	#10	22	26'–9"				
	S4	#10	22	21'–3"				
	S6	#10	11	29'–0"				
	S7	#10	11	26'–0"				
	S9	#10	28	44'–9"				
	S10	#10	22	38'–3"				
	S11	#10	22	20'–6"				
	ST1	#8	101	3'–0"				
	T1	#6	222	20'–5"				
	S12	#5	2	104'–6"				
Corral Rail	R8	#6	12	10'–9"	R1	#7	12	8'–4"
	R9	#6	48	9'–8"	R3	#7	78	6'–11"
	SC1	#4	27	6'–6"	R2	#6	2	5'–8"
					R4	#4	78	3'–5"
					R5	#3	140	3'–6"
					R6	#3	18	4'–6"
					R7	#3	88	4'–6"

BILL OF REINFORCING STEEL - PHASE 3
(Grade 60, Epoxy–Coated)

	Straight Bars				Bent Bars			
	Mark	Size	No.	Length	Mark	Size	No.	Length
Abutment No. 1	A13	#8	4	12'–4"	A8	#6	11	4'–3"
	A14	#8	4	10'–2"	A10	#6	22	2'–11"
	ST1	#8	5	3'–0"	A5	#5	14	11'–0"
	A11	#5	3	32'–10"	A6	#5	6	8'–0"
	A15	#5	10	10'–2"	A9	#5	11	3'–9"
					A12	#5	22	2'–5"
Abutment No. 2	A13	#8	4	12'–4"	A8	#6	11	4'–3"
	A14	#8	4	10'–2"	A10	#6	22	2'–11"
	ST1	#8	5	3'–0"	A5	#5	14	11'–0"
	A11	#5	3	32'–10"	A6	#5	6	8'–0"
	A15	#5	10	10'–2"	A7	#5	5	5'–0"
	W2	#5	8	4'–2"	A9	#5	11	3'–9"
	W3	#5	6	3'–3"	A12	#5	22	2'–5"
					W1	#5	12	9'–10"
Pier No. 1	P9	#8	9	12'–4"	P3	#5	20	6'–8"
	ST1	#8	11	3'–0"	P5	#5	18	6'–4"
	P6	#5	12	13'–9"	P8	#5	5	5'–10"
	P10	#5	6	12'–4"	P7	#3	4	2'–10"
	P11	#5	18	6'–6"				
Pier No. 2	P9	#8	9	12'–4"	P3	#5	20	6'–8"
	ST1	#8	11	3'–0"	P5	#5	18	6'–4"
	P6	#5	12	13'–9"	P8	#5	5	5'–10"
	P10	#5	6	12'–4"	P7	#3	4	2'–10"
	P11	#5	18	6'–6"				
Deck Slab	S1	#10	20	32'–3"	S8	#8	32	17'–7"
	S2	#10	10	42'–0"				
	S3	#10	12	26'–9"				
	S4	#10	12	21'–3"				
	S6	#10	6	29'–0"				
	S7	#10	6	26'–0"				
	S9	#10	20	44'–9"				
	S10	#10	12	38'–3"				
	S11	#10	12	20'–6"				
	ST1	#8	101	3'–0"				
	T2	#6	222	12'–4"				
Corral Rail	R8	#6	12	10'–9"	R1	#7	12	8'–4"
	R9	#6	48	9'–8"	R3	#7	78	6'–11"
	SC1	#4	27	6'–6"	R2	#6	2	5'–8"
					R4	#4	78	3'–5"
					R5	#3	140	3'–6"
					R6	#3	18	4'–6"
					R7	#3	88	4'–6"

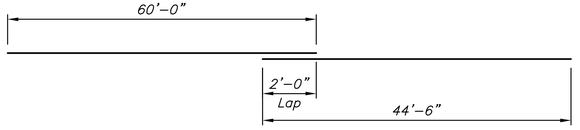

S12

MKEC
Wichita, KS • 316-684-9600

STREET IMPROVEMENTS FOR

127TH STREET EAST

FROM 13TH STREET NORTH TO 21ST STREET NORTH

©2017
MKEC Engineering
All Rights Reserved
www.mkec.com
These drawings and their contents, including, but not limited to, all concepts, designs, & ideas are the exclusive property of MKEC Engineering (MKEC), and may not be used or reproduced in any way without the express consent of MKEC.

BILL OF REINFORCING STEEL

PROJECT NO.	472-85158
DATE	11/29/17
SCALE	NTS

DESIGNED	DRAWN	CHECKED
KJS	DMU	KJS

NO.	REVISION	DATE

SHEET NO.

94 OF 183

Sh. No. 94

J:\PROJECTS\2014\140104\260 - COV_127TH E 13TH TO 21ST\05-CIVIL\CAD\BRIDGE\142602D06.DWG

PLOTTED: Wednesday, November 29, 2017 @ 03:11PM

STATE	PROJECT NO.	YEAR	SHEET NO.	TOTAL SHEETS
KANSAS	87 N-0615-01	2017	95	183

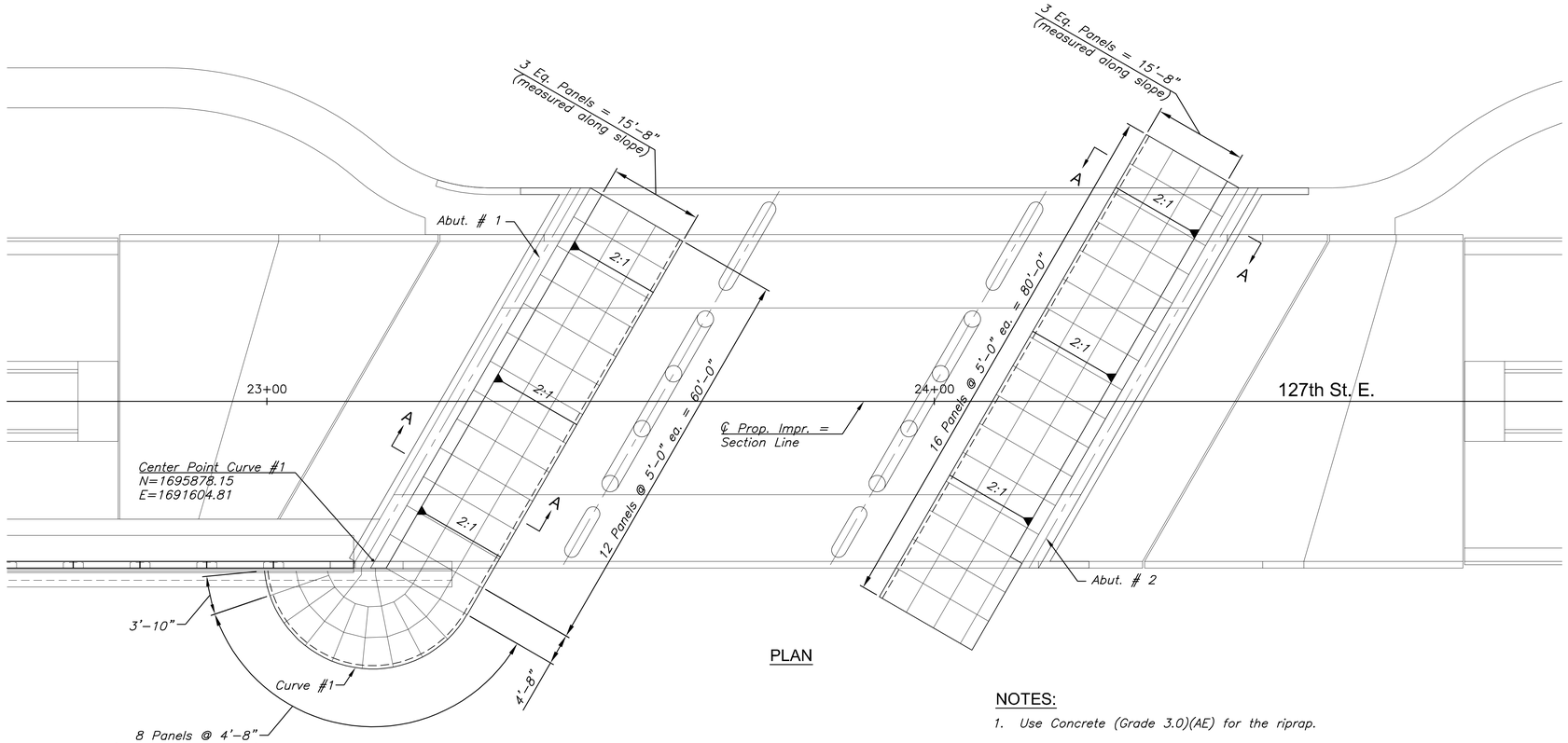

PLAN

CURVE #1 DATA	
Radius	16.31
Curve Length	41.125
Total Deflection	144°

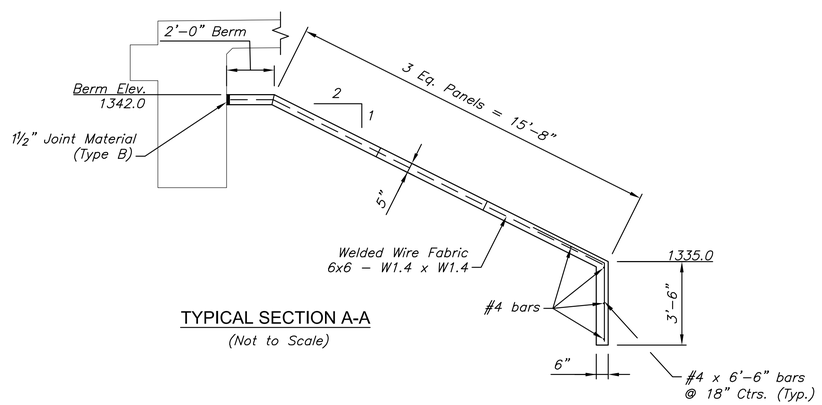

TYPICAL SECTION A-A
(Not to Scale)

NOTES:

1. Use Concrete (Grade 3.0)(AE) for the riprap.
2. Use 6x6 – W1.4 x W1.4 welded wire fabric conforming to the requirements of ASTM A185.
3. Use reinforcing steel conforming to the requirements of ASTM A615, Grade 60.
4. Place 1½" Type B expansion material in the joints caused by any intersection of the riprap with the abutment, wings, or columns.
5. Measurement of the "Reinforced Concrete Riprap" shall be in square yards and is based on the outside surface area.
6. The toe walls, Type B expansion material, welded wire fabric, and reinforcing steel are subsidiary to the bid item "Reinforced Concrete Riprap".

REINFORCED CONCRETE RIPRAP	
Location	Quantity
Abutment No. 1	168.06 Sq. Yds.
Abutment No. 2	157.04 Sq. Yds.

J:\PROJECTS\2014\1401040299 - COW_127TH E 13TH TO 21ST\05-CIVIL\CAD\BRIDGE\1402902P03.DWG

MKEC
Wichita, KS • 316-684-9600

STREET IMPROVEMENTS FOR

127TH STREET EAST

FROM 13TH STREET NORTH TO 21ST STREET NORTH

©2017
MKEC Engineering
All Rights Reserved
www.mkec.com
These drawings and their contents, including, but not limited to, all concepts, designs, & ideas are the exclusive property of MKEC Engineering (MKEC), and may not be used or reproduced in any way without the express consent of MKEC.

CONCRETE RIPRAP

PROJECT NO.	472-85158
DATE	11/29/17
SCALE	1"=10'

DESIGNED	DRAWN	CHECKED
DMU	RAM	DMU

NO.	REVISION	DATE

SHEET NO.

95 OF 183

Sh. No. 95

PLOTTED: Wednesday, November 29, 2017 @ 04:45PM

STATE	PROJECT NO.	YEAR	SHEET NO.	TOTAL SHEETS
KANSAS	87 N-0615-01	2017	96	183

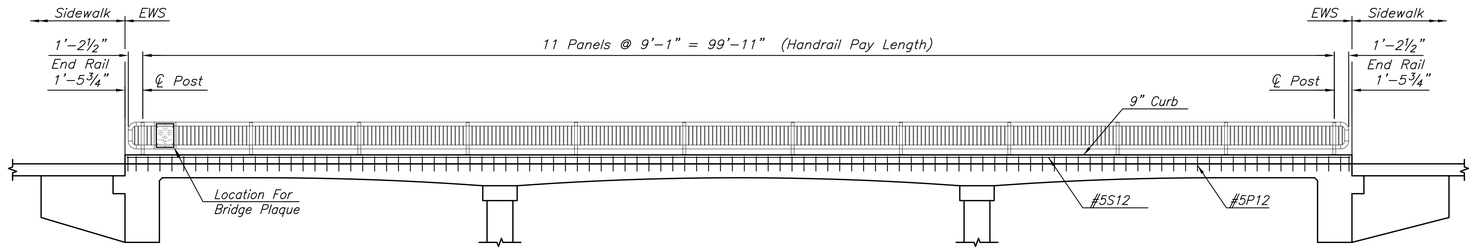

ELEVATION - HANDRAIL, PEDESTRIAN

(Shown and Dimensioned along Walkway Face of Handrail)
(West Edge Bridge Deck – Phase 2)

HANDRAIL NOTES

1. The rail members shall conform to ASTM Designation A36 or equivalent.
2. Rail shall be fabricated in lengths to include a minimum of two and a maximum of three panels. Posts shall be set vertical. Shims may be used between concrete and base plates of posts.
3. All parts of handrail shall be painted. The primer coat shall conform to the inorganic zinc system. Surface preparation shall be in accordance with that for structural steel. The finish coat shall be in accordance with water-borne acrylic finish coat.
4. The Contractor shall submit color chart for approval by the City. The color shall be "black (carboline C900)".
5. All materials, equipment and labor necessary for the installation of the handrail shall be subsidiary to the bid item.

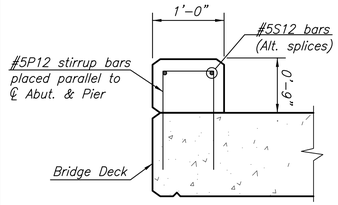

9" CURB DETAIL

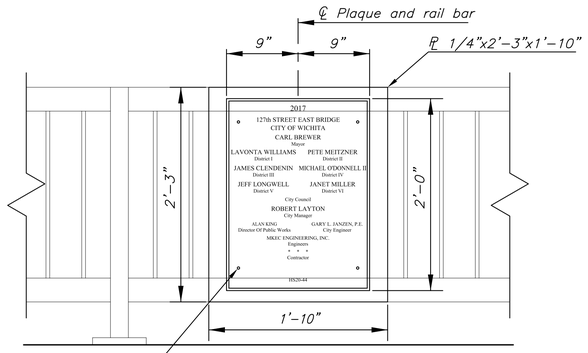

ELEVATION - PLAQUE

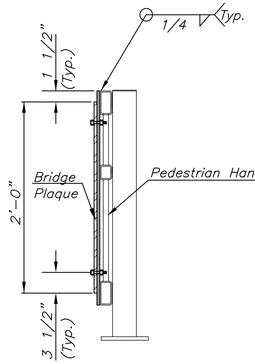

SECTION - PLAQUE

PLAQUE MOUNTING ON HANDRAIL (PEDESTRIAN)

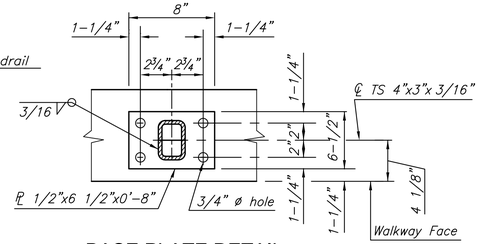

BASE PLATE DETAIL

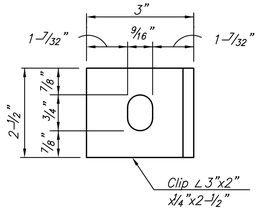

CLIP DETAIL

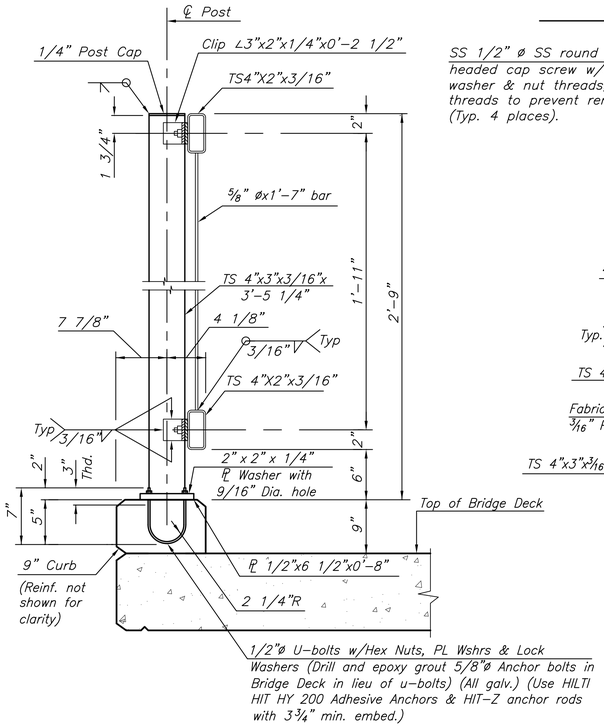

TYPICAL RAIL SECTION

NO SCALE

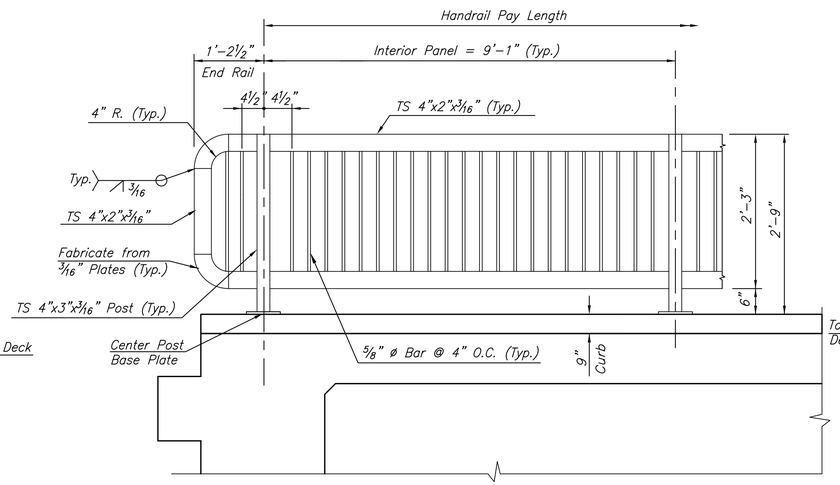

TYPICAL PANEL DETAIL

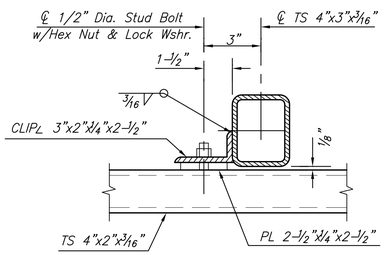

RAIL CONNECTION DETAIL

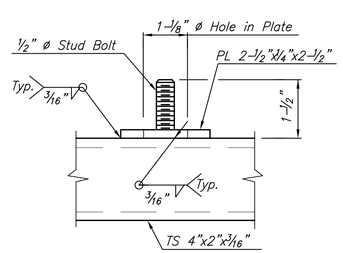

STUD BOLT DETAIL

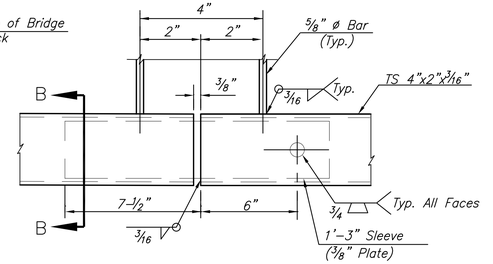

SLEEVE DETAIL

(Bottom Rail Shown, Top Rail Similar)

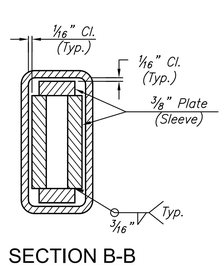

SECTION B-B

MKEC
Wichita, KS • 316-684-9600

STREET IMPROVEMENTS FOR

127TH STREET EAST

FROM 13TH STREET NORTH TO 21ST STREET NORTH

©2017
MKEC Engineering
All Rights Reserved
www.mkec.com
These drawings and their contents, including, but not limited to, all concepts, designs, & ideas are the exclusive property of MKEC Engineering (MKEC), and may not be used or reproduced in any way without the express consent of MKEC.

"HANDRAIL, PEDESTRIAN"

PROJECT NO.	472-85158
DATE	11/29/17
SCALE	NTS

DESIGNED	DRAWN	CHECKED
JRA	LES	JRA

NO.	REVISION	DATE

SHEET NO.

96 OF 183

Sh. No. 96

J:\PROJECTS\2014\140104\260 - COV_127TH E 13TH TO 21ST\05-CIVIL\CAD\PAV\1429IED07.DWG

PLOTTED: Wednesday, November 29, 2017 @ 03:12PM

STATE	PROJECT NO.	YEAR	SHEET NO.	TOTAL SHEETS
KANSAS	87 N–0615–01	2017	97	183

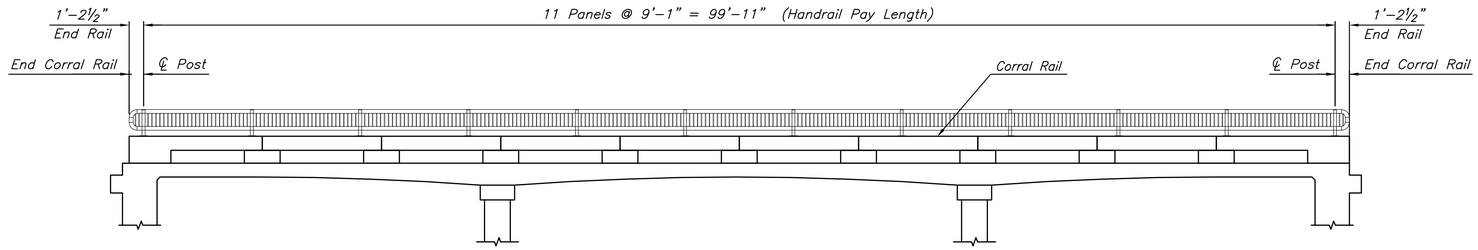

ELEVATION - HANDRAIL, BICYCLE

(Shown and Dimensioned along Traffic Face of Corral Rail)
(Both Corral Rails – Looking West at West Rail, Looking East at East Rail)

HANDRAIL NOTES

1. *The rail members shall conform to ASTM Designation A36 or equivalent.*
2. *Rail shall be fabricated in lengths to include a minimum of two and a maximum of three panels. Posts shall be set vertical. Shims may be used between concrete and base plates of posts.*
3. *All parts of handrail shall be painted. The primer coat shall conform to the inorganic zinc system. Surface preparation shall be in accordance with that for structural steel. The finish coat shall be in accordance with water–borne acrylic finish coat.*
4. *The Contractor shall submit color chart for approval by the City. The color shall be "black (carboline C900)".*
5. *All materials, equipment and labor necessary for the installation of the handrail shall be subsidiary to the bid item.*

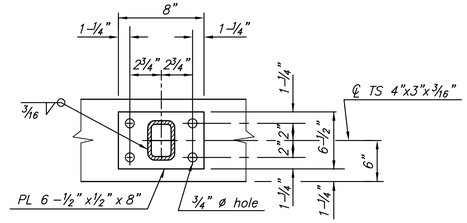

BASE PLATE DETAIL

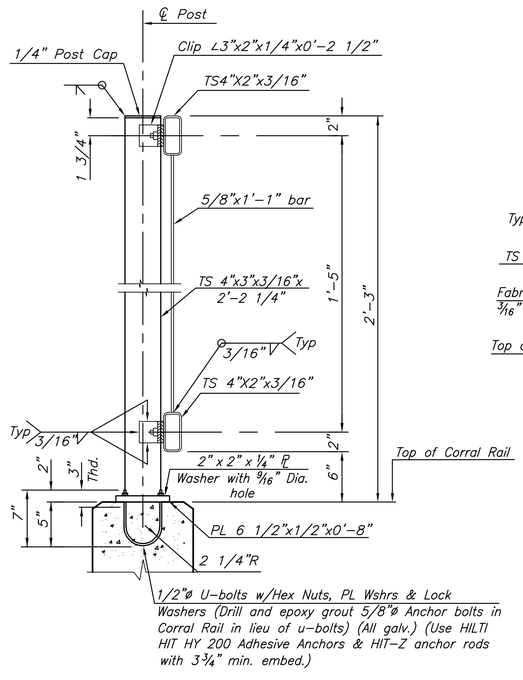

TYPICAL RAIL SECTION

NO SCALE

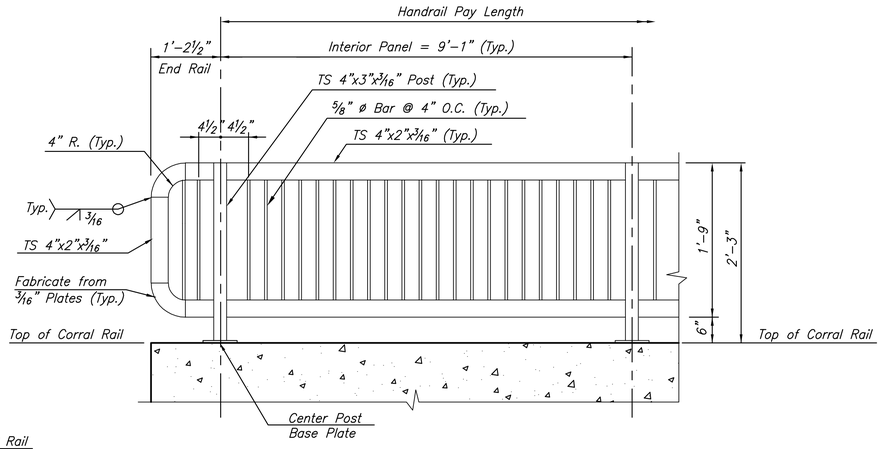

TYPICAL PANEL DETAIL

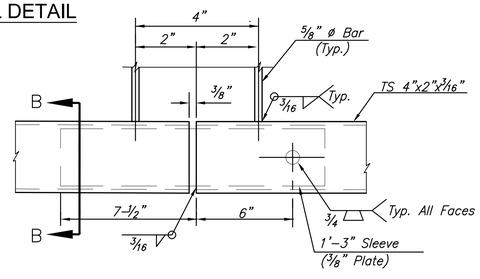

SLEEVE DETAIL

(Bottom Rail Shown, Top Rail Similar)

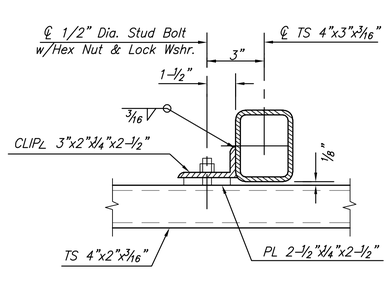

RAIL CONNECTION DETAIL

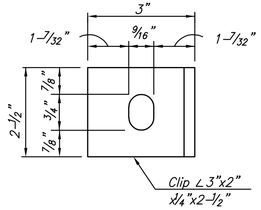

CLIP DETAIL

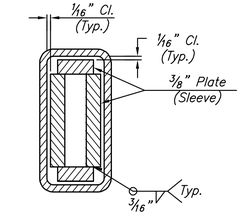

SECTION B-B

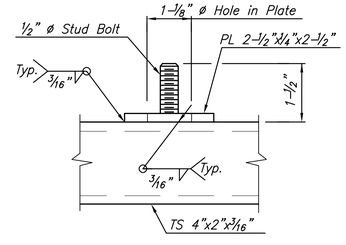

STUD BOLT DETAIL

MKEC
Wichita, KS • 316-684-9600

STREET IMPROVEMENTS FOR

127TH STREET EAST

FROM 13TH STREET NORTH TO 21ST STREET NORTH

©2017
MKEC Engineering
All Rights Reserved
www.mkec.com
These drawings and their contents, including, but not limited to, all concepts, designs, & ideas are the exclusive property of MKEC Engineering (MKEC), and may not be used or reproduced in any way without the express consent of MKEC.

"HANDRAIL, BICYCLE"

PROJECT NO.	472-85158
DATE	11/29/17
SCALE	NTS

DESIGNED	DRAWN	CHECKED
JRA	LES	JRA

NO.	REVISION	DATE

SHEET NO.

97 OF 183

Sh. No. 97

J:\PROJECTS\2014\140194090 - COW_127TH E 13TH TO 21ST\05-CIVIL\CAD\PAVI\14296ED07.DWG

PLOTTED: Wednesday, November 29, 2017 @ 04:45PM

STATE	PROJECT NO.	YEAR	SHEET NO.	TOTAL SHEETS
KANSAS	87 N-0615-01	2017	98	183

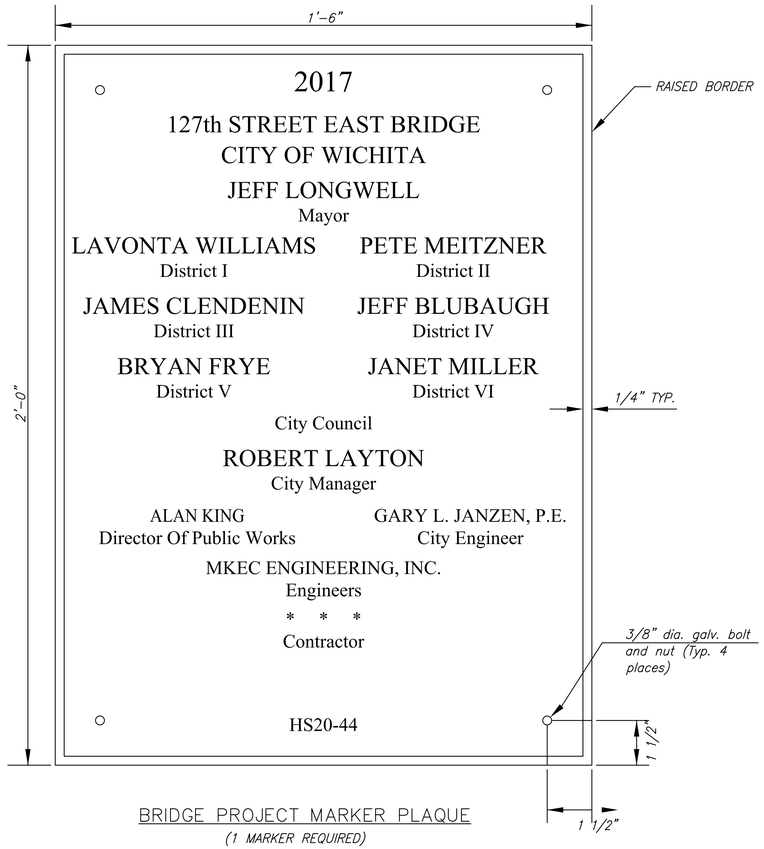

BRIDGE PROJECT MARKER PLAQUE

(1 MARKER REQUIRED)

** * * NAME OF CONTRACTOR*

NOTE: Information my need to be revised prior to casting.

PROJECT MARKER		
LOCATION ≠	NOTES	BRIDGE
Sta. 23+48.4, 31' Lt.	*New Plaque (Non-Participating)*	*Phase 2*

≠ Locations shown for information only. Actual plaque mounting locations to be field located.

NOTES:

Contractor to furnish a rubbing of the Bridge Project Plaque to the Engineer for approval before casting. Project Bridge Plaque shall conform to applicable requirements of Sub-section 1625 of the Kansas Dept. of Transportation Standard Specifications. Plaque shall be manufactured such that it can be attached to pedestrian handrail.

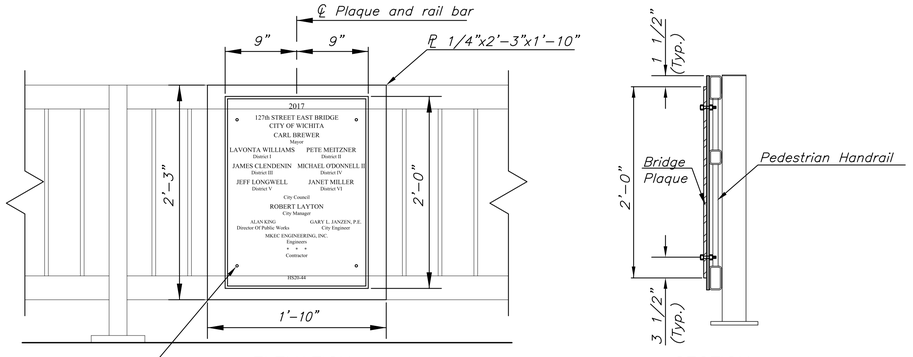

ELEVATION SECTION

PLAQUE MOUNTING ON HANDRAIL (PEDESTRIAN)

MKEC
Wichita, KS • 316-684-9600

STREET IMPROVEMENTS FOR

127TH STREET EAST

FROM 13TH STREET NORTH TO 21ST STREET NORTH

©2017
MKEC Engineering
All Rights Reserved
www.mkec.com
These drawings and their contents, including, but not limited to, all concepts, designs, & ideas are the exclusive property of MKEC Engineering (MKEC), and may not be used or reproduced in any way without the express consent of MKEC.

BRIDGE PLAQUE DETAILS

PROJECT NO.	472-85158
DATE	11/29/17
SCALE	NTS

DESIGNED	DRAWN	CHECKED
JRA	LES	JRA

NO.	REVISION	DATE

SHEET NO.

98 OF 183

Sh. No. 98

J:\PROJECTS\2014\1940290 - COW_127TH E 13TH TO 21ST\05-CIVIL\CAD\BRIDGE\14290_PLAQUES.DWG

PLOTTED: Wednesday, November 29, 2017 @ 04:45PM

STATE	PROJECT NO.	YEAR	SHEET NO.	TOTAL SHEETS
KANSAS	87 N-0615-01	2017	99	183

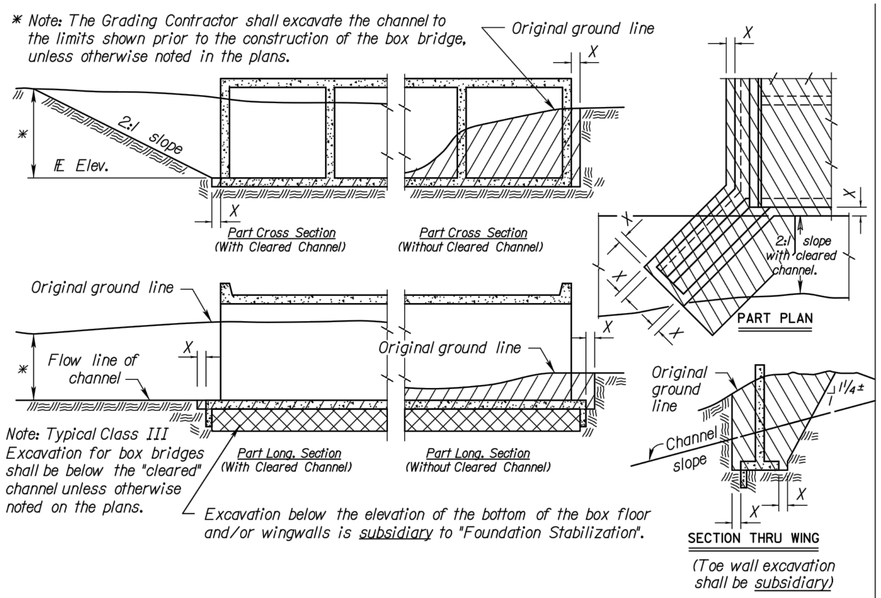

EXCAVATION DETAILS FOR REINFORCED CONCRETE BOX CULVERT

Note: Excavation for culverts less than bridge length and the additional excavation for "Embedded Structures" shall not be paid for as Class III Excavation, but shall be subsidiary to Grade 4.0 Concrete.

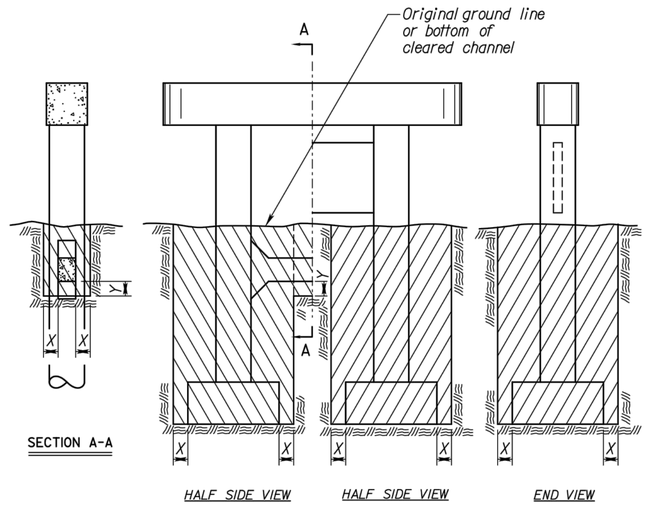

EXCAVATION DETAILS FOR TYPICAL PIERS

See detail when rock or shale (rock) is encountered. ❀

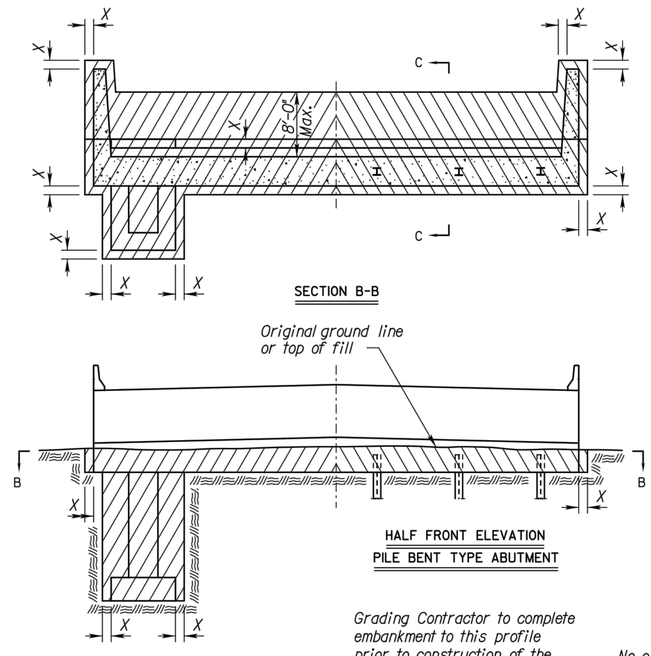

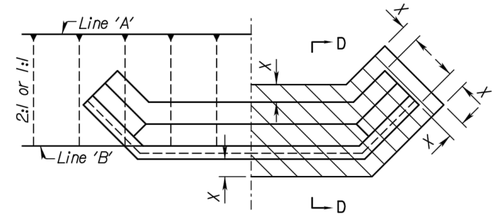

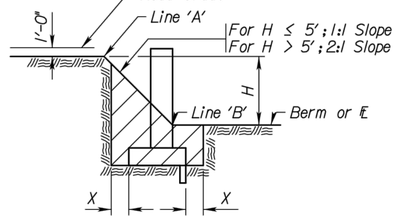

EXCAVATION DETAILS FOR ABUTMENTS WITH FLARED WINGWALLS

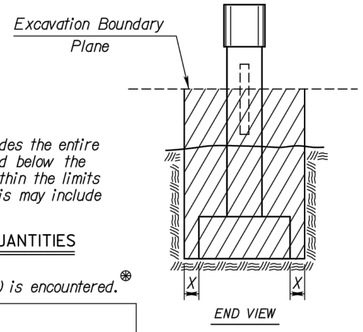

Note: Class II Excavation includes the entire volume of whatever nature found below the "Excavation Boundary Plane", within the limits specified for measurement. This may include water or air.

CLASS II EXCAVATION QUANTITIES

See detail when rock or shale (rock) is encountered. ❀

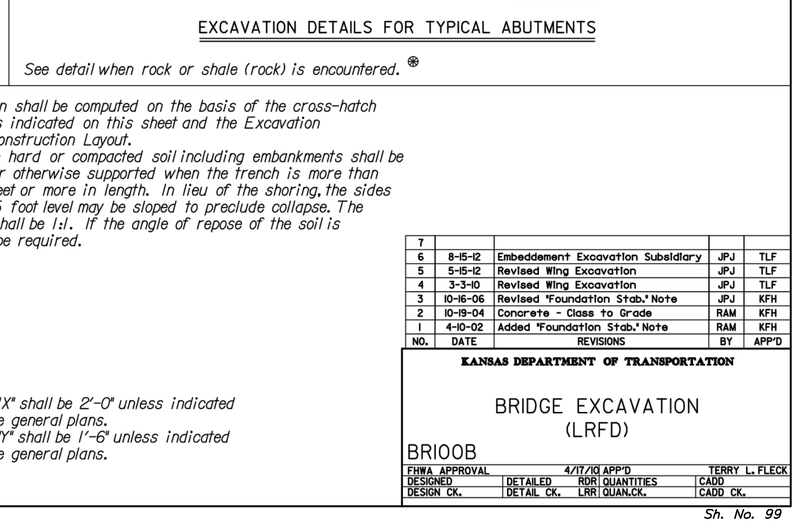

Note: Bridge Contractor shall finish the embankment and berms after the construction of the abutment and dispose of any excess material as approved by the Engineer.

Note: Any sheeting required shall be subsidiary to the bid item for Excavation.

EXCAVATION DETAILS FOR TYPICAL ABUTMENTS

See detail when rock or shale (rock) is encountered. ❀

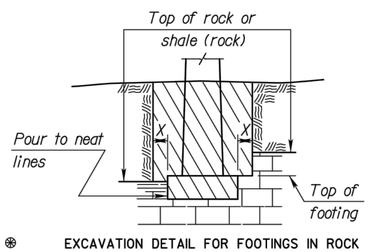

❀ EXCAVATION DETAIL FOR FOOTINGS IN ROCK OR SHALE (ROCK)

(Piers and Abutments)

Note: Excavation below top of rock, hard shale or below top of footing, whichever is lower, shall be to neat lines of the concrete construction.

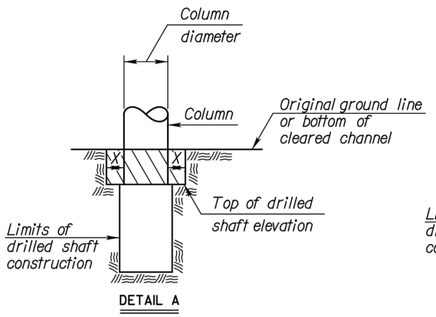

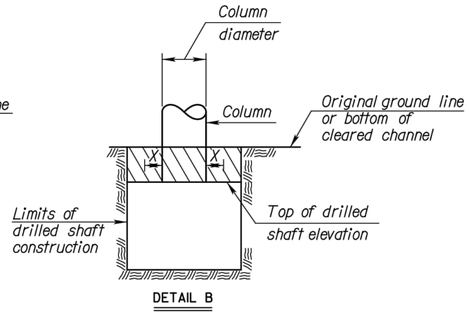

DRILLED SHAFT DETAILS

Note: Whenever the limits of the drilled shaft construction are greater than the Column Diameter + 2X, the limits of Class I, II or III Excavation shall be the limits of the drilled shaft construction. (See Detail B)

Note: All bridge excavation shall be computed on the basis of the cross-hatch areas and boundary lines indicated on this sheet and the Excavation Boundary Plane on the Construction Layout.

Sides of trenches in hard or compacted soil including embankments shall be shored, sheeted, braced or otherwise supported when the trench is more than 5 feet in depth and 8 feet or more in length. In lieu of the shoring, the sides of the trench above the 5 foot level may be sloped to preclude collapse. The slope for average soils shall be 1:1. If the angle of repose of the soil is less, flatter slopes shall be required.

Dimension "X" shall be 2'-0" unless indicated otherwise on the general plans.

Dimension "Y" shall be 1'-6" unless indicated otherwise on the general plans.

NO.	DATE	REVISIONS	BY	APP'D
7				
6	8-15-12	Embeddement Excavation Subsidiary	JPJ	TLF
5	5-15-12	Revised Wing Excavation	JPJ	TLF
4	3-3-10	Revised Wing Excavation	JPJ	TLF
3	10-16-06	Revised "Foundation Stab." Note	JPJ	KFH
2	10-19-04	Concrete - Class to Grade	RAM	KFH
1	4-10-02	Added "Foundation Stab." Note	RAM	KFH

KANSAS DEPARTMENT OF TRANSPORTATION

BRIDGE EXCAVATION (LRFD)

BRIOOB

FHWA APPROVAL	4/17/10 APP'D		TERRY L. FLECK
DESIGNED	DETAILED	RDR QUANTITIES	CADD
DESIGN CK.	DETAIL CK.	LRR QUAN.CK.	CADD CK.

Sh. No. 99

J:\PROJECTS\2014\40104290 - COW_127TH E 13TH TO 21ST\05-CIVIL\CAD\BRIDGE\1429OBR100.DWG

PLOTTED: Wednesday, November 29, 2017 @ 04:46PM

STATE	PROJECT NO.	YEAR	SHEET NO.	TOTAL SHEETS
KANSAS	87-72-0615-01	2017	100	183

O D 10¾" T. = ††
O D 12¾" T. = ††
O D 14" T. = ††

†† See the Geology Report or "Summary of Quanities" for Pipe Pile wall thickness

Note: Pile shall be driven with a steel head having a projecting ring fitting inside the pipe. Clearance between ring and pipe should be ¼".

Note: Pile pipe may be spiral welded, longitudinal welded, or seamless steel pipe.

¾" Driving Pt.

O D

¾" Round Pt.

PLAIN ROUND CAST-IN-PLACE CONCRETE PILES

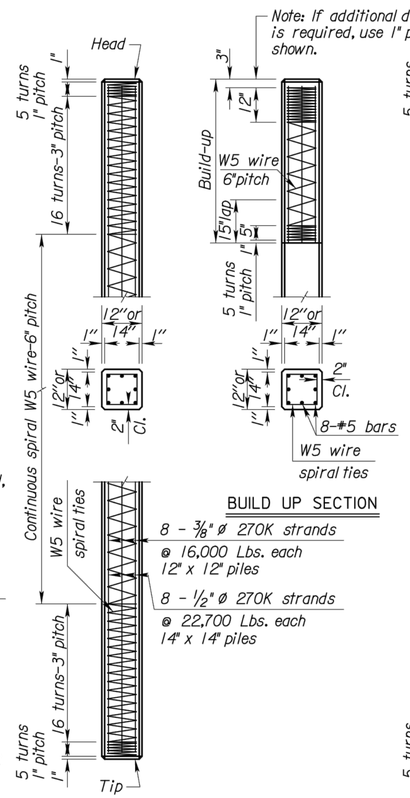

12" OR 14" PRESTRESSED CONCRETE PILES

BUILD UP SECTION

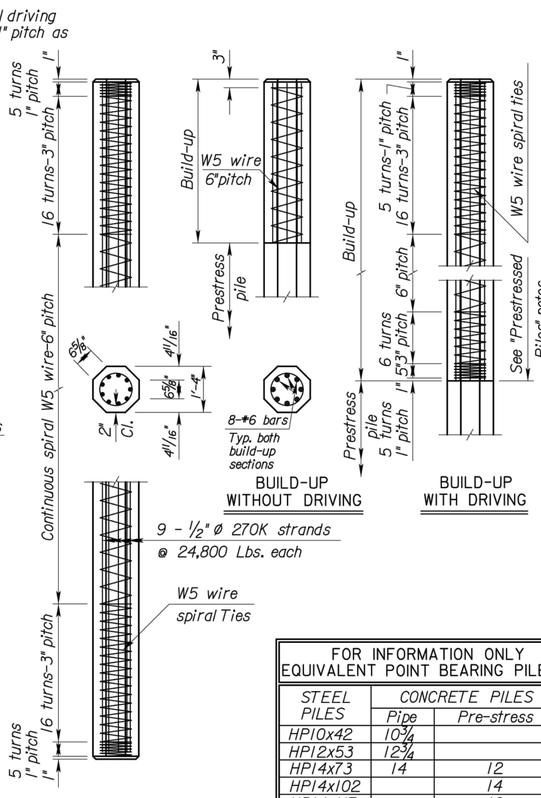

9 - ½" ø 270K strands
@ 24,800 Lbs. each

16" PRESTRESSED CONCRETE PILES

BUILD-UP WITHOUT DRIVING

BUILD-UP WITH DRIVING

8 - ⅜" ø 270K strands
@ 16,000 Lbs. each
12" x 12" piles

8 - ½" ø 270K strands
@ 22,700 Lbs. each
14" x 14" piles

FOR INFORMATION ONLY EQUIVALENT POINT BEARING PILES		
STEEL PILES	CONCRETE PILES	
	Pipe	Pre-stress
HP10x42	10¾	
HP12x53	12¾	
HP14x73	14	12
HP14x102		14
HP14x117		16

GENERAL NOTES

PRESTRESSED PILES: Fabricate prestressed concrete pile splices in accordance with the Manufacturer's recommendations subject to the approval of the Engineer.

Method of attachment of pile to build-up may be by any of the methods" given in the notes on "Alternate Methods. If mild reinforcing steel is used for attachment,the area shall be no less than that used in the build-up.

ALTERNATE METHODS: Method of attachment of a pile to build-up may be by any of the following methods:
1. Cut off at least 2'-0" of pile and expose a minimum of 2'-0" of strands.
2. Cast 8-#6, or 8-#5 bars (equally (spaced into pile head. All bars shall extend into pile head and project from pile head a minimum of 2'-0".
3. Drill 8 holes in pile head (equally spaced) for installation of 8 grouted dowel bars of same size and length as in 2.
4. Provide cored holes for bars as in 3.
No bars or strands are to extend from head of pile or build-up into footing or pile cap unless approved by the Engineer.

TEST PILES: Drive test piles where called for on the bridge plans. The test piles located within the limits of the substructure will become a part of the bridge pile system.

DRIVING FORMULA: Driving formula shall conform to the Standard Specifications.

MEASUREMENT AND PAYMENT: Measurement and payment for all piles shall comply with the Standard Specifications.

The following items are covered in Division 1000 of the Standard Specifications:

REINFORCEMENT: Use reinforcing steel conforming to ASTM A615, Grade 60. Hoops and spirals may be either plain or deformed bars.

PRESTRESSING STEEL: Use uncoated seven-wire stress relieved or low relaxation prestressing strand conforming to ASTM A416, Gr. 270.

SPECIFICATIONS: Standard Specifications for State Road and Bridge Construction as currently used by the Kansas Department of Transportation. The following items are covered in Division 700 of the Standard Specifications:

CONCRETE: Concrete for cast-in-place shall be f'c = 3,500 PSI.. Concrete for prestressed shall be f'c = 5,000 PSI.

WELDING: All field welding shall meet the requirements of the Standard Specifications.

Use only Shielded Metal Arch Welding SMAW (stick welding) for pile splices.

Use only low hydrogen E7018, 7016, or 7015 series welding rod (electrode) for all welding applications during pile splicing. See General Notes or proper storage of welding rod. welding filler rod (electrode) for field welding of splices.

New electrode are to be purchased for each KDOT project. The electrode shall arrive on the project in factory hermetically sealed containers opened and labeled with indelible ink in front of the engineer. The label shall include the current date and the project number. If the container seal is questionable or shows signs of damage the electrode is to be dried in an oven at least one hour at a temperature of 700°F to 800°F.

Upon removal from intact hermetically sealed factory packaging or the drying oven the electrode is to be placed in a storage oven with a minimum temperature of 250°F.

When electrodes are removed from the hermetically sealed container or storage oven and exposed to the atmosphere for less than 4 hours place into the storage oven for at least 4 hours before removing for use.

If electrode is exposed to the atmosphere for 4 hours or more (or 9 hours for moisture resistant electrodes designated with an R in their labeling) then electrode can be dried in a drying oven at a temperature of 450°F to 550°F.

If the electrode is exposed to the atmosphere for 4 hours or more a second time or the rod becomes wet discard rod.

CAST-IN-PLACE SHELLS: Steel shells for cast-in-place piles shall conform to the requirements of the Standard Specifications.
All piles driven without a mandrel shall be of the minimum thicknesses shown. Piles driven with a mandrel shall be of sufficient strength and thickness to withstand driving without injury and to resist harmful distortion and/or buckling due to soil pressure after the mandrel is removed.
Remove, replace or correct to the satisfaction of the Engineer improperly driven, broken or otherwise defective pipe piles. Otherwise drive an additional pile at no extra cost.
The Contractor shall maintain a light suitable for visual inspection of the pile on the Job at all times prior to and during the filling of the pipe.

STEEL PILE: Steel pile shall conform to the requirements of the Standard Specifications.

PILE POINTS: Pile points shall conform to the dimensions shown and to requirements of the Standard Specifications.

PAINT: All paint shall comply with the Standard Specifications, or as specified on the plans.

MILL TEST REPORTS: Steel piles test reports and steel shell test reports shall comply with the Standard Specifications.

CAST STEEL PILE POINT

The pile point shall be a one-piece unit of cast steel. Weld pile points in accordance with manufacturers recommendations to each steel pile before driving.

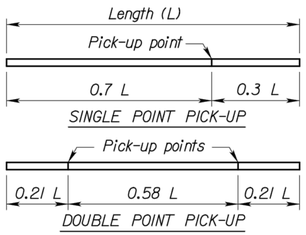

PICK-UP POINTS FOR PRESTRESSED PILING

Max. length - 55' single point pick-up
Max. length - 80' double point pick-up

Note: Piles shall be marked at Pick-up points to indicate proper points for attaching handling lines.



PIPE PILE POINT

Weld Symbology Definition

Use grinder to bevel edges of splice as shown in weld symbology and drawing. In addition to bevels, produce clean, bare, and shiny surfaces at and around the splice welding location.

Use E7018, 7016, or 7015 series welding rod (electrode) for all welding applications during pile splicing. See General Notes for proper storage of welding rod.

Lay full penetration root weld from beveled side of splice.

Back gouge root weld from side opposite of root welding application making sure to remove all foreign materials, porous steel, and inclusions from root weld. Finish welding the non beveled side of the splice.

Finish welding beveled side of the splice while removing slag, foreign materials, porous steel, and inclusions in between welding passes, use of a grinder may be needed.

Verify that enough filler metal has been correctly placed in all weld locations to obtain a flush or convex surface with no concavity produced upon completion of the final welds.

SPLICES: Splices for steel piles and shell piling shall be in accordance with details shown on this sheet and the Standard Specifications.

For integral pile bent abutments and piers, if a pile splice is required, do not locate the pile splice within a region extending 2'-0" above and 10'-0" below the bottom of the concrete web wall. For abutments, locate the pile splice at least 10'-0" below top of fill.

With the approval of the Engineer, one splice per bent may be allowed in the region described above without testing. If additional splices are anticipated, based on the geology, the Contractor will add a sufficient amount to the bottom of pile, prior to driving, so that the splice is below the regions described above in the completed pile.

† For integral pile bent abutments and piers, if a splice is located within the regions described above, then the Contractor will test the welds by Radiograph (RT) test methods. Repair and retest any welds not passing the test(s). Each weld tested will have written confirmation of results. Report these results to the Engineer. This work is not paid for directly, but is subsidiary to "Piles".

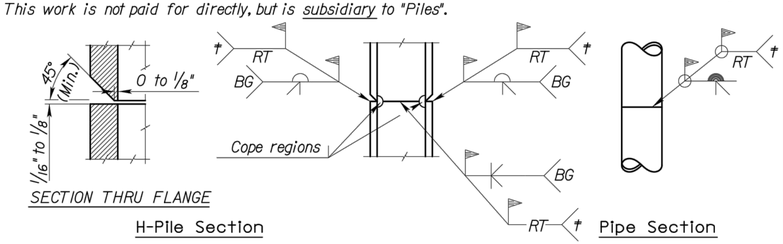

PILE SPLICE DETAILS

BG = Backgouge

NO.	DATE	REVISIONS	BY	APP'D
4	09-15-15	Clarify Notes	JPJ	CER
3	06-18-12	Clarify ft, rod type, use and weld	JPJ	TLF
2	1-5-09	Pile Splice Location and Weld Test	JPJ	KFH
1	6-14-06	Rev. Pile Splice Note & Reinforcing	JPJ	KFH

KANSAS DEPARTMENT OF TRANSPORTATION

STANDARD PILE DETAILS

BRIIO

FHWA APPROVAL	10-04-12	APP'D	Terry L. Fleck
DESIGNED JPJ	DETAILED	QUANTITIES	CADD RAA
DESIGN CK.	DETAIL CK.	QUAN.CK.	CADD CK.

CADconform Certify This File

Sh. No. 100

J:\PROJECTS\2014\4014010\0200 - COW_127TH E 13TH TO 215TH\05-CIVIL\CAD\BRIDGE\1429BR110.DWG

PLOTTED: Wednesday, November 29, 2017 @ 03:12PM

STATE	PROJECT NO.	YEAR	SHEET NO.	TOTAL SHEETS
KANSAS	87 N-0615-01	2017	101	183

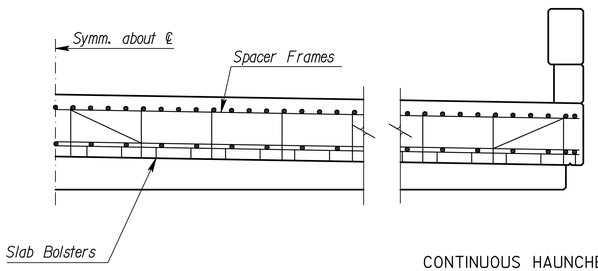

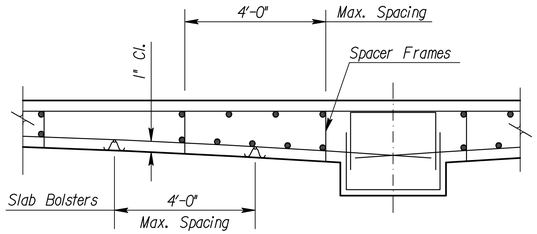

CONTINUOUS HAUNCHED SLAB

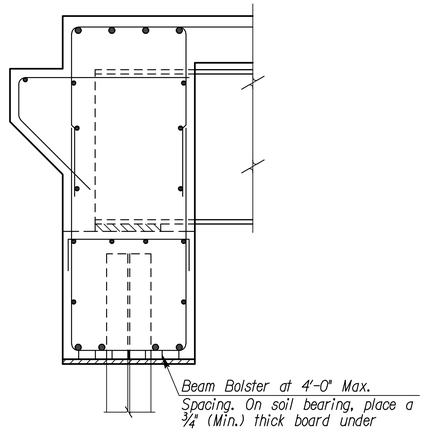

ABUTMENT

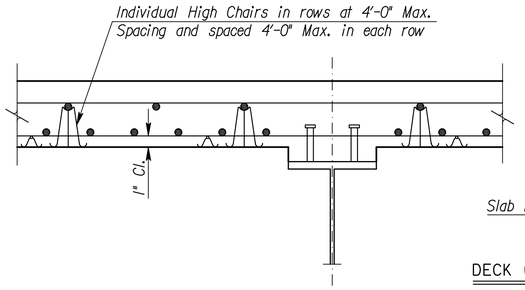

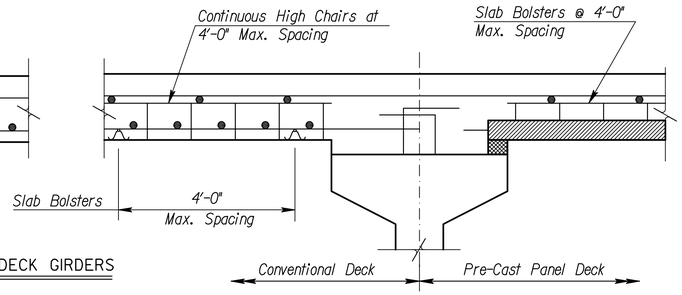

DECK GIRDERS

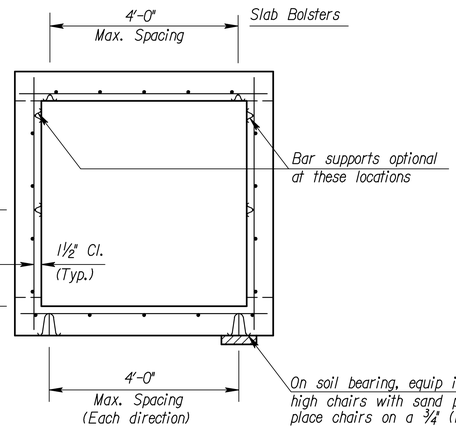

BOX CULVERT

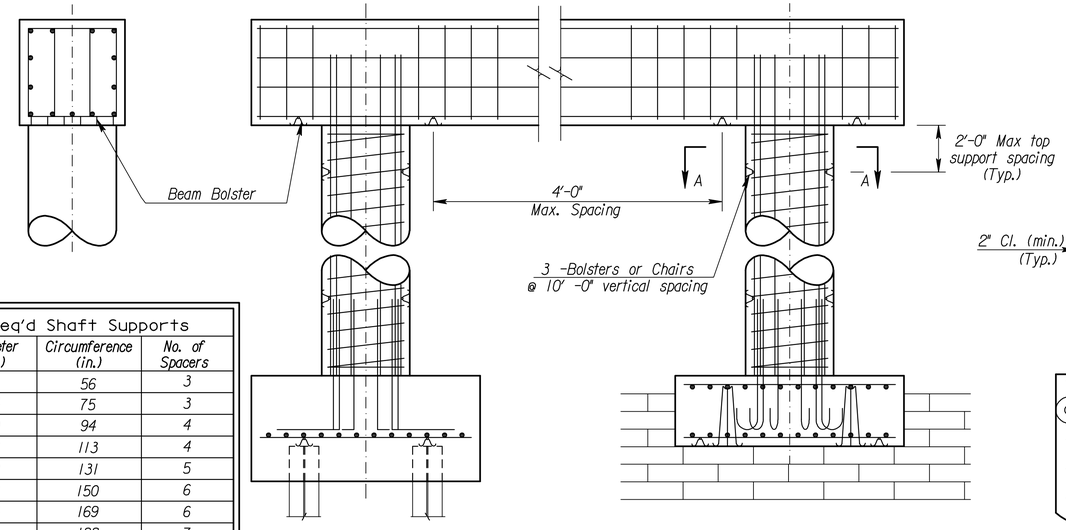

PIER

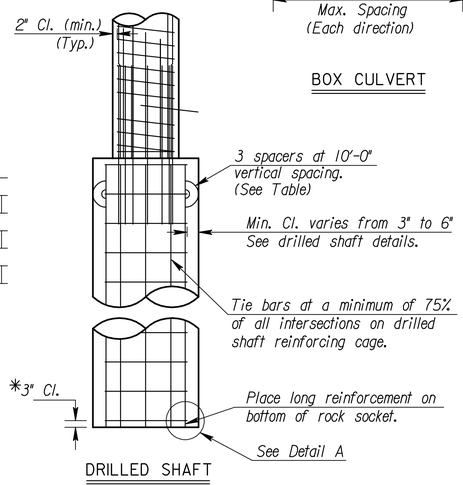

DRILLED SHAFT

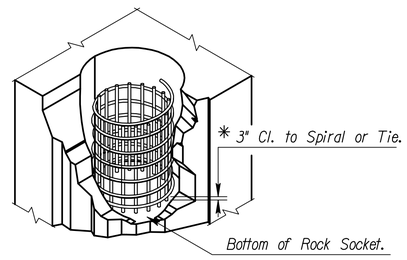

DETAIL A

*Note: Longitudinal reinforcing steel is placed on the bottom of the rock socket. Maintain 3" clearance from the bottom of rock socket to the first spiral or tie bar.

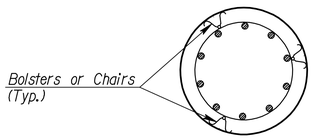

SECTION A-A

Req'd Shaft Supports

Diameter (in.)	Circumference (in.)	No. of Spacers
18	56	3
24	75	3
30	94	4
36	113	4
42	131	5
48	150	6
54	169	6
60	188	7
66	207	7
72	226	8
78	244	9
84	263	9
90	282	10
96	301	11
102	320	11
108	339	12

GENERAL NOTES

Reference is made to the latest edition of the CRSI "Manual of Standard Practice" for recommended industry practices concerning reinforcing steel.

Use only the following types of bar supports:

1) Wire Bar Supports:

a) Epoxy coated reinforcing: Class I Protection
b) Non-epoxy coated reinforcing: Class 1, 2, or 3 Protection

2) Plastic Bar Supports

3) Supplementary bars

When securing epoxy coated reinforcement, use tie wires or metal clips that are epoxy or plastic coated.

Do not weld reinforcing steel to bar supports or to other reinforcing steel. Shop weld spacer frames for haunched slabs.

Tie bars at all intersections around the perimeter of each mat and at not less than 2'-0" centers or at every intersection, whichever is greater.

Where more than one length of bar support is required, lap the end legs so they are locked or tied together.

Use proper height supports to maintain the distance between the reinforcing and the formed surface or the top surface of deck slabs within ¼" of that indicated on the plans.

Spacings shown are maximums. Use sufficient supports, as determined by the Engineer, to retain the reinforcing steel in position.

Construct any platforms, required for the support of workers and/or equipment during concrete placement, directly on the forms and not on the reinforcing steel.

Designs and arrangements of Supports or Spacers other than as shown on this sheet, may be used with the permission of the Engineer.

NO.	DATE	REVISIONS	BY	APP'D
5	11-10-10	Column Bar Supports Req'd	JPJ	TLF
4	12-01-05	Drilled Shaft Spiral Steel Placement	JPJ	KFH
3	8-21-00	Added Pre-Cast Panel Detail	RAM	KFH
2	12-20-99	Added Haunched Slab Bolsters	RAM	KFH
1	12-09-99	Revised Drilled Shaft Clearance	RAM	KFH

KANSAS DEPARTMENT OF TRANSPORTATION

SUPPORTS AND SPACERS FOR REINFORCING STEEL

BRI20

FHWA APPROVAL		11-17-10	APP'D	Terry L. Fleck	
DESIGNED	RAM	DETAILED	RAA	QUANTITIES	CADD RAA
DESIGN CK.	LRR	DETAIL CK.	RAM	QUAN.CK.	CADD CK. RAM

J:\PROJECTS\2014\0140100299 - COW_127TH E 13TH TO 215TH\05-CIVIL\CAD\BRIDGE\1429BR1-20.DWG

PLOTTED: Wednesday, November 29, 2017 @ 03:13PM

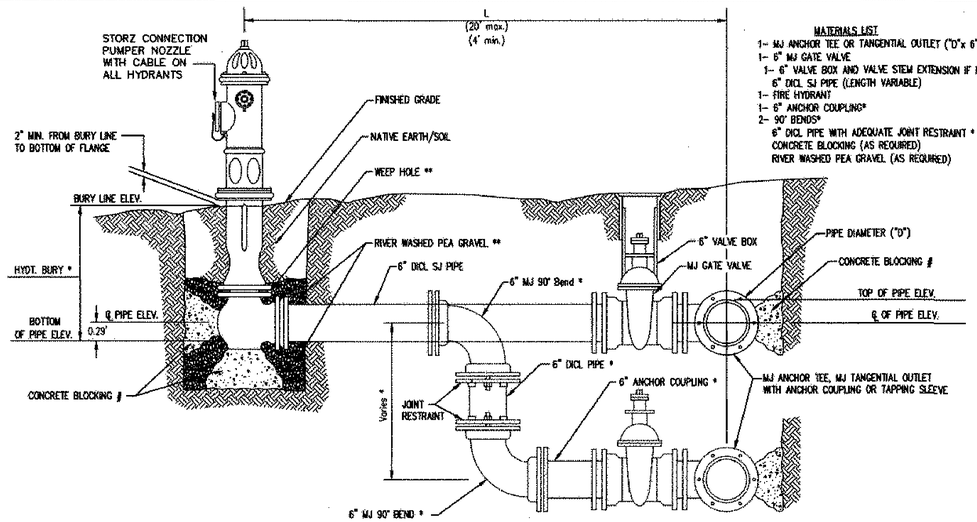

MATERIALS LIST
1- MJ ANCHOR TEE OR TANGENTIAL OUTLET ("D"x 6")
1- 6" MJ GATE VALVE
1- 6" VALVE BOX AND VALVE STEM EXTENSION IF REQUIRED *
6" DICL SJ PIPE (LENGTH VARIABLE)
1- FIRE HYDRANT
1- 6" ANCHOR COUPLING*
2- 90° BENDS*
6" DICL PIPE WITH ADEQUATE JOINT RESTRAINT *
CONCRETE BLOCKING (AS REQUIRED)
RIVER WASHED PEA GRAVEL (AS REQUIRED)

* IF THE REQUIRED HYDRANT BURY IS IN EXCESS OF 5', BUT LESS THAN 7', CONTRACTOR SHALL USE STANDARD 5' HYDRANT BURY AND HYDRANT BARREL EXTENSIONS AS NECESSARY. IF THE REQUIRED HYDRANT BURY IS GREATER THAN 7', CONTRACTOR SHALL USE 5' HYDRANT BURY, 2-MJ 90° BENDS, 6" ANCHOR COUPLING AND 6" DICL PIPE AS NECESSARY FOR VERTICAL ADJUSTMENT. THE CONTRACTOR SHALL PROVIDE ADEQUATE THRUST BLOCKING AT HYDRANT AND MEGALUGS, OR SIMILAR RESTRAINT BETWEEN 90° BENDS TO SECURE ALL FITTINGS DURING TESTING AND OPERATION. THE CONTRACTOR SHALL PROVIDE A VALVE STEM EXTENSION PER DETAIL THIS SHEET.

** CAUTION: WEEP HOLES TO BE KEPT CLEAR DURING CONSTRUCTION AND BACKFILL. CONCRETE FOR THRUST BLOCKING SHALL NOT OBSTRUCT WEEP HOLES. PLACE 1 CUBIC FOOT OF RIVER WASHED PEA GRAVEL AROUND EACH WEEP HOLE.

CONCRETE THRUST BLOCKING SHALL BE KEPT CLEAR OF BOLTS, NUTS, AND MJ ACCESSORIES.

FIRE HYDRANT ASSEMBLY

PER CITY OF WICHITA SPECIFICATIONS

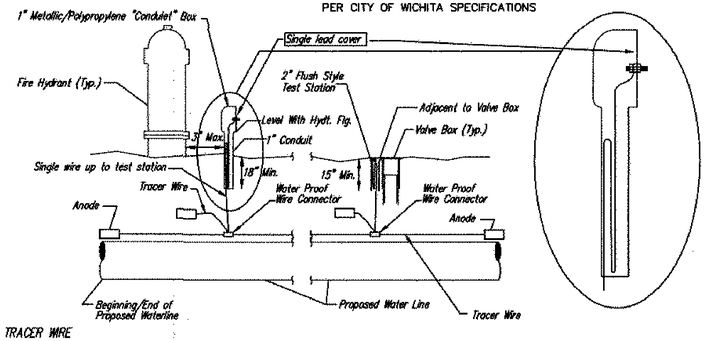

TRACER WIRE

Conductive type pipe locator/tracer wire shall be install to locate all waterline pipe regardless of pipe material. The wire shall extend the entire length of the proposed pipe. The wire shall be taped to the waterline and pulled with the pipe. A waterproof connector shall be used at splice locations. A complete list of approved tracer wire and waterproof connectors can be found on the City of Wichita's website at www.wichita.gov.

WIRE

The tracer wire shall be Blue No. 12 AWG CCS with 45 mil HDPE insulation. To allow for grade adjustment, a minimum of 12" of excess wire shall be coiled at the bottom of the test station for all wires. Wire connectors shall be installed per manufacturer recommendations. Contractor shall attach wire being installed with proposed water main to any tracer wire installed with adjacent waterline projects.

TEST STATIONS

*The test station for fire hydrant application shall be a 1" "conduiet" style station as manufactured by AGRA Industries with a removable solid cover having a single lead extending from the face or approved equal. The "conduit" style test station shall be attached to a 1" rigid galvanized conduit with a minimum length of 36" and plastic end bushing. The flush style shall have the word "WATER" stamped or molded into the lid. The test station for valve applications shall be a 2" flush style test station with wire connector on lid. Model # T2PH7BTLP Handley Industries or CD14*TP SnakePit as manufactured by Copperhead Industries or approved equal. The flush style shall have the word "WATER" stamped or molded into the lid. All test stations shall be manufactured using molded blue tops or sufficiently coated with blue enamel paint. The tracer wire and the anode wire shall be install to allow 12" of wire within the test station. The location of all test stations shall be recorded, and shown in the as-built drawings. Flush style test stations shall not be installed in pavement or sidewalk unless approved by the Engineer. Contractor shall extend tracer wire & move flush mount test station to nearest location out of pavement or sidewalk.*

ANODES

The anodes shall be 3 lb. bare zinc or magnesium. The anodes shall be buried at the same elevation as the waterline at each test station. The anodes shall be connected to 12 AWG CCS which shall be extended to the test station.

TRACER WIRE DETAIL

COST IS SUBSIDIARY TO PIPE INSTALLATION

FIRE HYDRANTS REQUIRED				
STATION	BURY LINE ELEVATION	TOP OF PIPE ELEVATION	FIRE HYDRANT BURY REQUIRED*	VALVE STEM EXT. REQUIRED (ft)*
LINE 2 10+25.55	1342.32	1356.5	6.5'	N/A
LINE 3 10+21.94	1343.41	1337.6	6.5'	N/A
FH #1 10+00.00	1364.23	1355.08	N/A	T.S. & V.

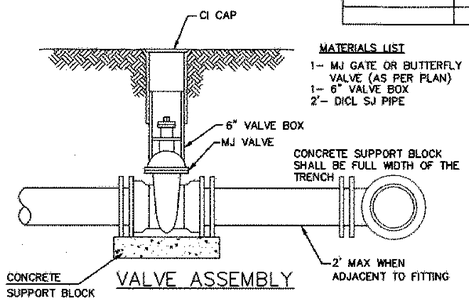

MATERIALS LIST
1- MJ GATE OR BUTTERFLY VALVE (AS PER PLAN)
1- 6" VALVE BOX
2'- DICL SJ PIPE

VALVE ASSEMBLY

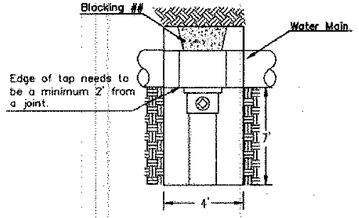

CITY TAP

Blocking ## When the City of Wichita makes tap, blocking is to be done by Contractor

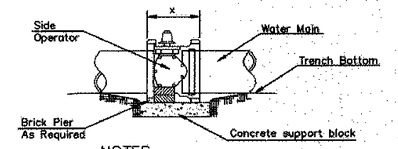

NOTES

1. This detail covers Butterfly Valve installation, inclusive, regardless of type of pipe or joint used. 24" and larger lines to be detailed on plans.
2. 6" Valve Box and Cover required per City of Wichita Std. Specifications.
3. Conc. Support Block to be full width of trench.

CONCRETE SUPPORT BLOCKING FOR BUTTERFLY VALVE INSTALLATION

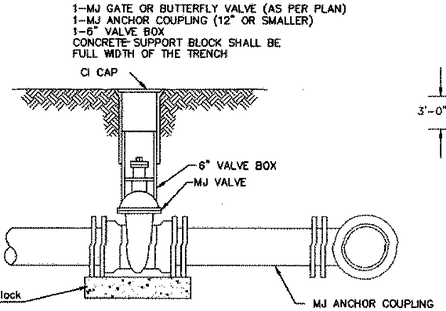

MATERIALS LIST
1-MJ GATE OR BUTTERFLY VALVE (AS PER PLAN)
1-MJ ANCHOR COUPLING (12" OR SMALLER)
1-6" VALVE BOX
CONCRETE SUPPORT BLOCK SHALL BE FULL WIDTH OF THE TRENCH

ANCHORED VALVE ASSEMBLY

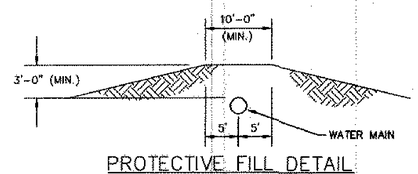

PROTECTIVE FILL DETAIL

MINIMUM PROTECTIVE FILL SHALL BE PROVIDED IN ALL INSTANCES WHERE COVER OVER THE PROP. WATER LINE IS LESS THAN 3'. (COST SUBSIDIARY TO PIPE INSTALLATION).

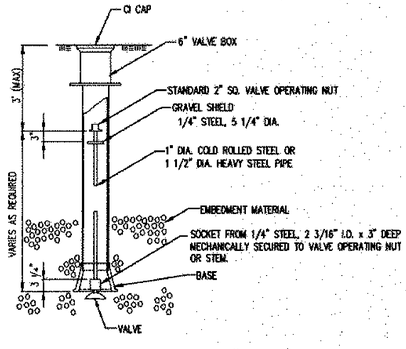

VALVE STEM EXTENSION DETAIL

NOTE: ONE VALVE STEM EXTENSION FOR EACH VALVE BURIED GREATER THAN 5'.

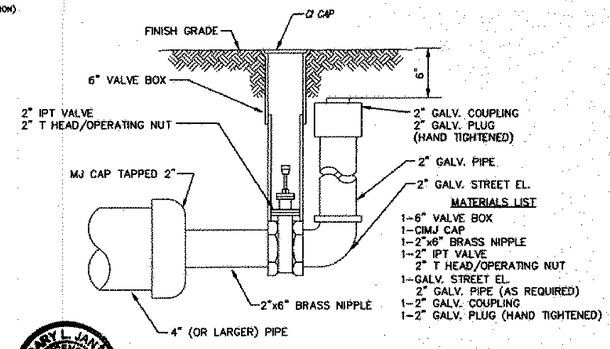

MATERIALS LIST
1-6" VALVE BOX
1-CIMJ CAP
1-2"x6" BRASS NIPPLE
1-2" IPT VALVE
2" T HEAD/OPERATING NUT
1-GALV. STREET EL.
2" GALV. PIPE (AS REQUIRED)
1-2" GALV. COUPLING
1-2" GALV. PLUG (HAND TIGHTENED)

2" BLOWOFF ASSEMBLY

GARY L. JANZEN LICENSED 16234 KANSAS PROFESSIONAL ENGINEER
10/27/16

REVISED: OCTOBER 2016

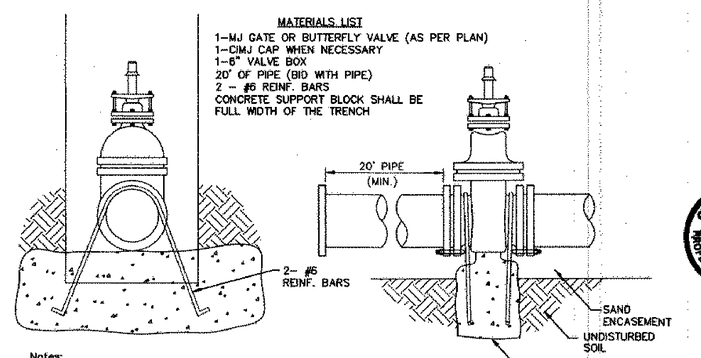

Notes:
1. Concrete Block at Valve to have sufficient bearing in undisturbed soil to prevent thrust movement as shown in table at right. Field Engineer to determine thrust loading of undisturbed soil and final size of thrust block.
2. The thrust block shall be constructed such that bolts, nuts, and other MJ accessories are kept clear of concrete.
3. All valves at dead ends and at other locations as called out on the plans shall be blocked as shown here.

THRUST AT VALVES	
VALVE	THRUST AT 150 ¢/in²
4"	1809 lbs.
6"	4245 lbs.
8"	7540 lbs.
12"	16965 lbs.

ANCHORED VALVE ASSEMBLY, SPECIAL

CITY OF WICHITA
PUBLIC WORKS & UTILITIES ENGINEERING DIVISION

STANDARD WATER ASSEMBLY DETAIL

CITY ENGINEER
GARY JANZEN, P.E.

PROJECT NUMBER	OCA NUMBER	DATE
472-85158	707065	

CITY ENGINEER'S OFFICE
CITY HALL - SEVENTH FLOOR
455 NORTH MAIN STREET
WICHITA, KANSAS 67202-1620
(316) 268-4501

SHEET
102 OF 183

Sh. No. 102 WL-101

J:\PROJECTS\2014\1401040290 - COW_127TH E 13TH TO 21ST\05-CIVIL\CAD\WTR\14290WL-101.DWG

PLOTTED: Wednesday, November 29, 2017 @ 03:13PM
J:\PROJECTS\2017\1401\04\0260 - COW_ZPTH E 13TH TO 21ST\05-CIVIL\CAD\WTR\1426W04-102.DWG

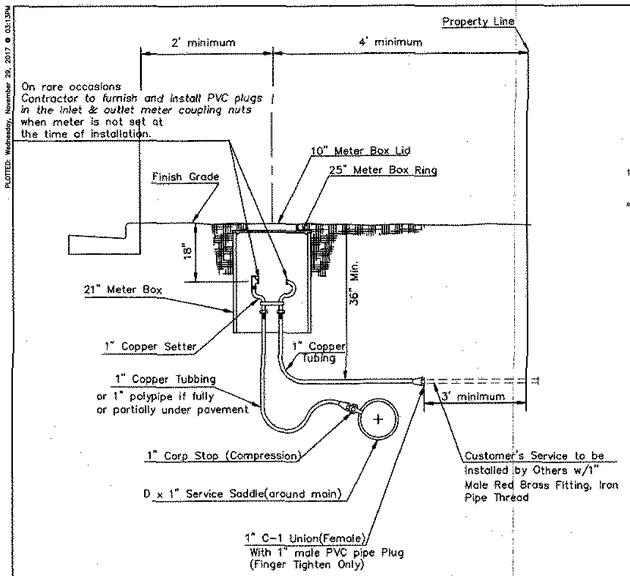

Minimum length of pigtail on consumer side is 36" of copper tubing from meter set.

Bore hole under paving shall be a maximum of 2" in diameter and a minimum of 36" below top of pavement.

Service Saddles are required on all mains.

Meter boxes will be located on each lot to be served, as indicated in the SPECIAL PROVISIONS

TYPICAL 1" METER SETTING

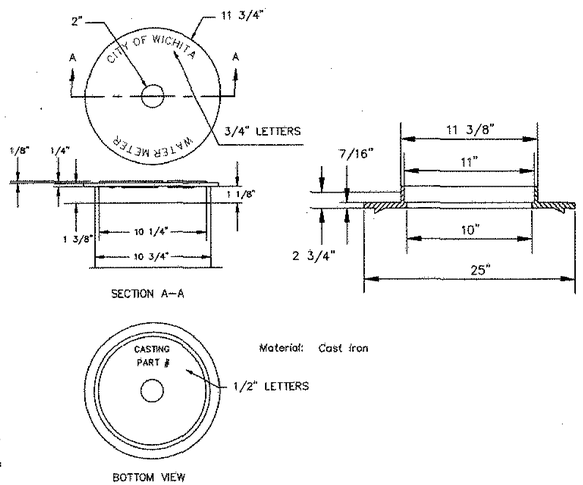

Material: Cast iron

NOT TRAFFIC RATED
RING & LID FOR 1" METER BOX

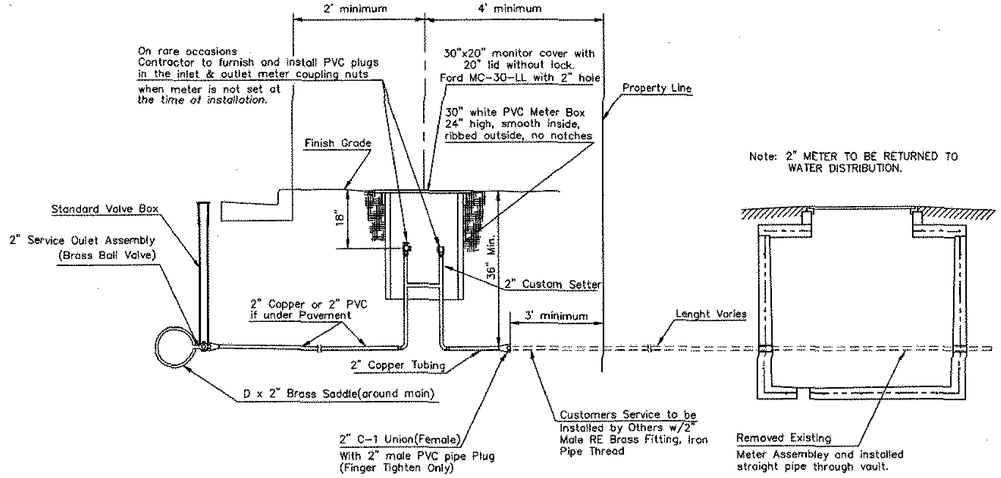

TYPICAL 2" METER SETTING

Note: ONE VALVE STEM EXTENSION FOR EACH VALVE BURIED GREATER THAN 5'.

TYPICAL 2" METER SETTING INVOLVING EXISTING 2" METER VAULT

Note: ONE VALVE STEM EXTENSION FOR EACH *VALVE BURIED GREATER THAN 5'.*

1 – Ø Mueller Thread Corporation Stop
– Ø Type "K" Copper Tubing
1 – Ø Copper to Iron Union (Male)
1 – Ø Brass Curb Stop (Iron to Iron)
2 – Øx4" Brass Nipple

Air Release
2 – Ø Brass Elbows (90°)
1 – 1"x6" Brass Nipple
1 – 30" Monitor Cover
1 – 20" Meter Lid

NOTE:

THE 1"/2" AIR RELEASE ASSEMBLY WILL TYPICALLY BE USED ON WATER MAINS 24" AND SMALLER, AS SPECIFICALLY DESIGNATED IN THE PLANS. COMBINATION AIR RELAEASE ASSEMBLIES WILL BE SPECIFICALLY DESIGNED FOR PROJECTS WITH LARGER MAINS, AND WILL BE INCLUDED IN THE PLANS.

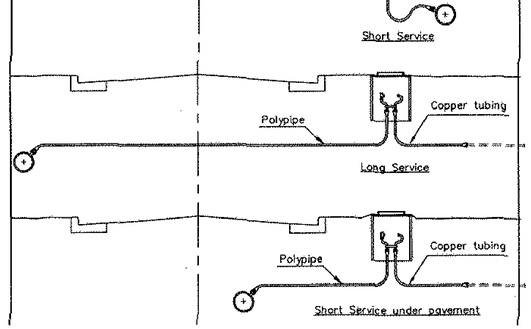

SERVICE TYPES

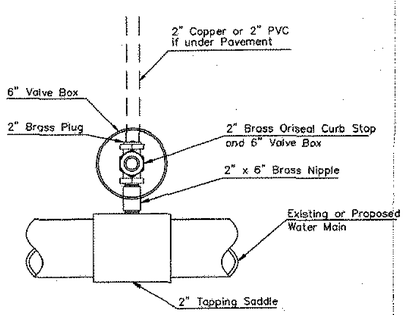

Note: Where the 2" Service Outlet Assembly is to be used to connect a 2" main to another main, the 2" valve shall be a 2" IPT Gate Valve. 2" ball or globe vavles shall not be approved for this use.

2" SERVICE OUTLET ASSEMBLY

TOP VIEW

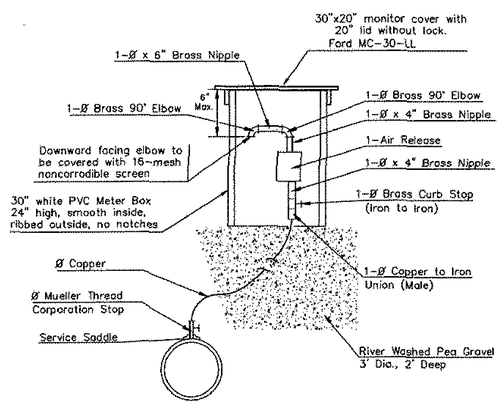

MATERIALS FOR 1" or 2" AIR RELEASE ASSEMBLY
Ø = 1" or 2"

GARY L. JANZEN LICENSED 16294 KANSAS PROFESSIONAL ENGINEER
01/26/15

REVISED: JANUARY 2015

CITY OF WICHITA
PUBLIC WORKS & UTILITIES
ENGINEERING DIVISION

STANDARD WATER SERVICE DETAIL

CITY ENGINEER
GARY JANZEN, P.E.

PROJECT NUMBER	OCA NUMBER	DATE
472-85158	707065	

CITY ENGINEER'S OFFICE
CITY HALL - SEVENTH FLOOR
455 NORTH MAIN STREET
WICHITA, KANSAS 67202-1620
(316) 268-4501

SHEET
103 OF 183

Sh. No. 103 **WL-102**

PLOTTED: Wednesday, November 29, 2017 @ 03:13PM

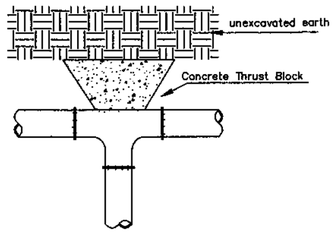

TEE

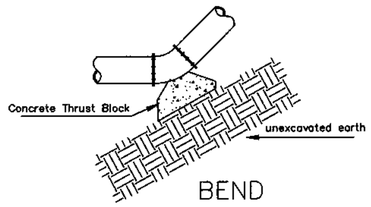

BEND

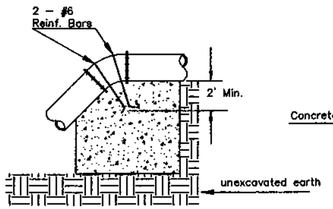

VERTICAL BEND

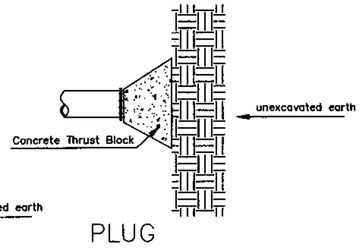

PLUG

PIPE SIZE	THRUST AT FITTINGS IN TONS–AT 150#/IN²P					
	PLUG	90°	45°	22 1/2°	11 1/4°	TEE
6"	2.8	3.95	2.15	1.09	.55	2.8
8"	4.9	6.95	3.75	1.90	.96	4.9
12"	11.4	16.1	8.75	4.45	2.25	11.4
16"	20.15	28.5	15.4	7.85	3.95	20.15
20"	31.15	44.0	23.85	12.15	6.10	31.15
24"	44.55	63.0	34.1	17.4	8.75	44.55

TYPICAL THRUST BLOCKS

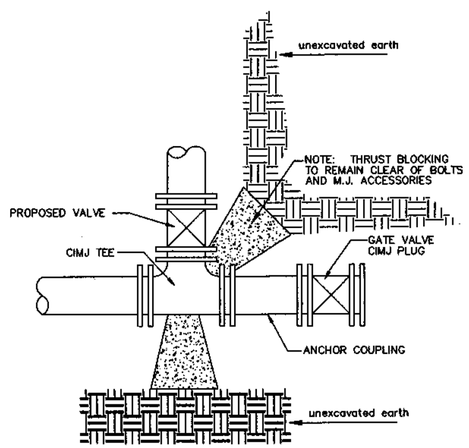

KEY BLOCK DETAIL

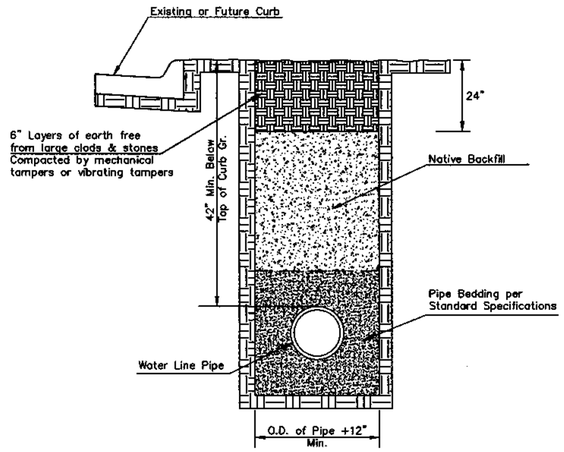

TRENCH COMPACTION IN ROAD RIGHT–OF–WAY

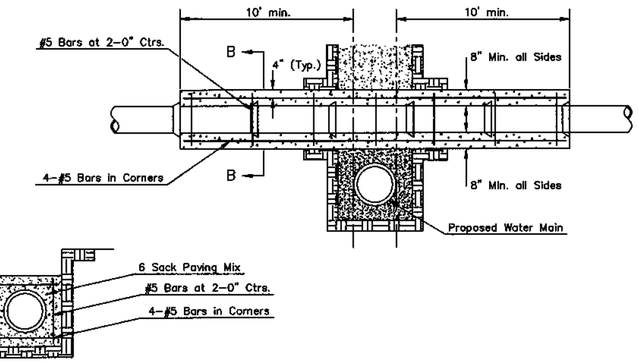

Note: Encasement to begin and end at a Bell on Sanitary Sewer Pipe.

SECTION B–B

REINFORCED CONCRETE ENCASEMENT OF SANITARY SEWER

SIDE VIEW

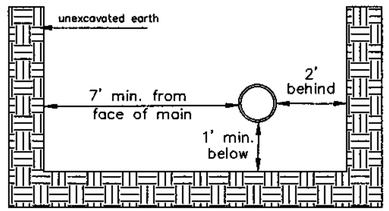

Note: When shoring is required it is to be per The City of Wichita Standard Specifications.

TOP VIEW

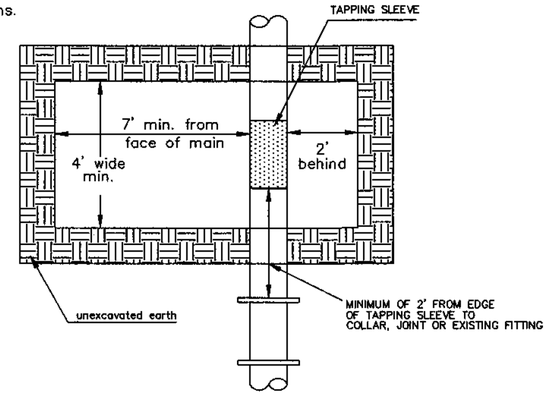

EXCAVATION FOR WET TAP

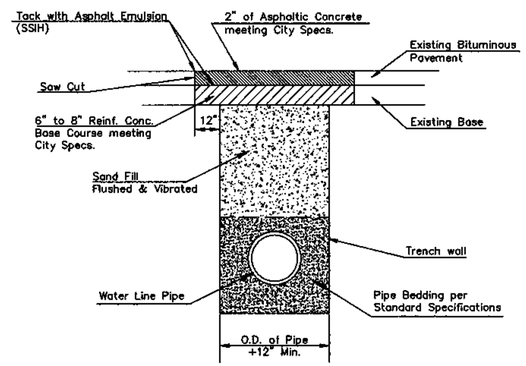

PAVEMENT REPLACEMENT & TRENCH COMPACTION UNDER EXISTING AND PROPOSED CITY ROADS

* PLANS GOVERN
UNLESS OTHERWISE NOTED ON PLANS

GARY L. JANZEN — 16264 — KANSAS — PROFESSIONAL ENGINEER
07/21/15

REVISED: JULY 2015

CITY OF WICHITA
PUBLIC WORKS & UTILITIES ENGINEERING DIVISION

MISCELLANEOUS WATER DETAILS

CITY ENGINEER
GARY JANZEN, P.E..

PROJECT NUMBER	OCA NUMBER	DATE
472-85158	707065	

CITY ENGINEER'S OFFICE
CITY HALL - SEVENTH FLOOR
455 NORTH MAIN STREET
WICHITA, KANSAS 67202-1620
(316) 268-4501

SHEET
104 OF 183

WL-104
Sh. No. 104

J:\PROJECTS\2014\1401040090 - COW_127TH E 13TH TO 21ST\05-CIVIL\CAD\WTR\142900WL-104.DWG

PLOTTED: Wednesday, November 29, 2017 @ 05:21PM

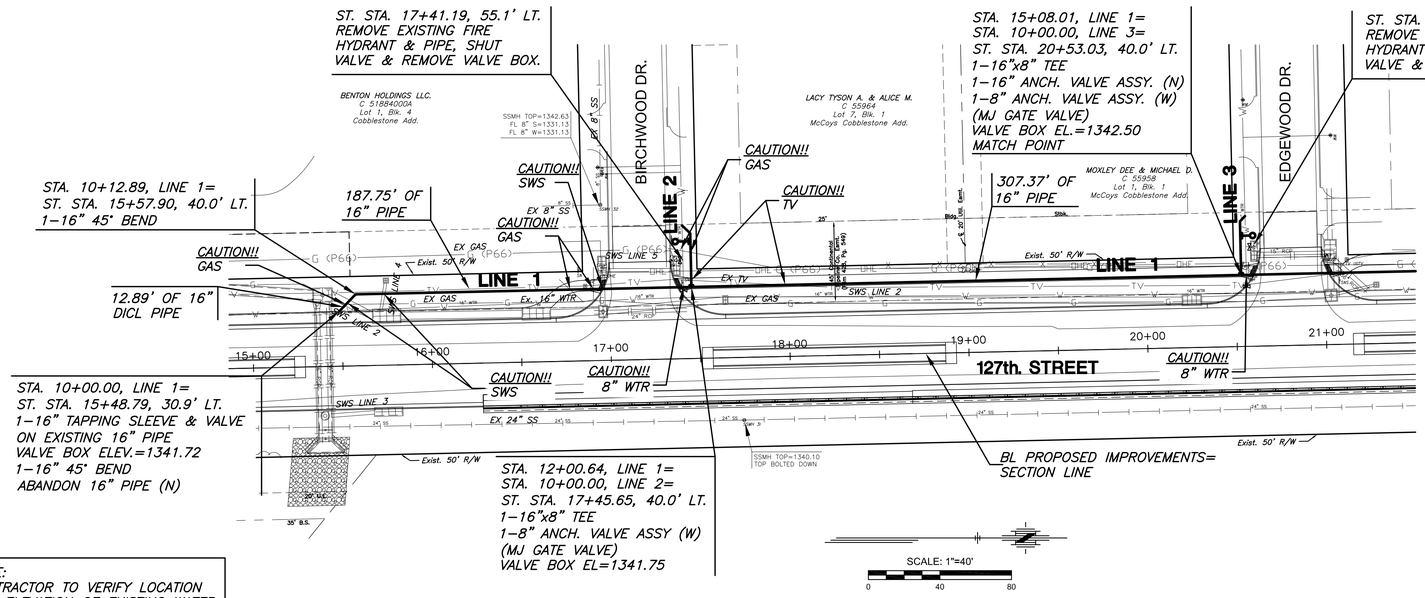

PLAN LINE 1

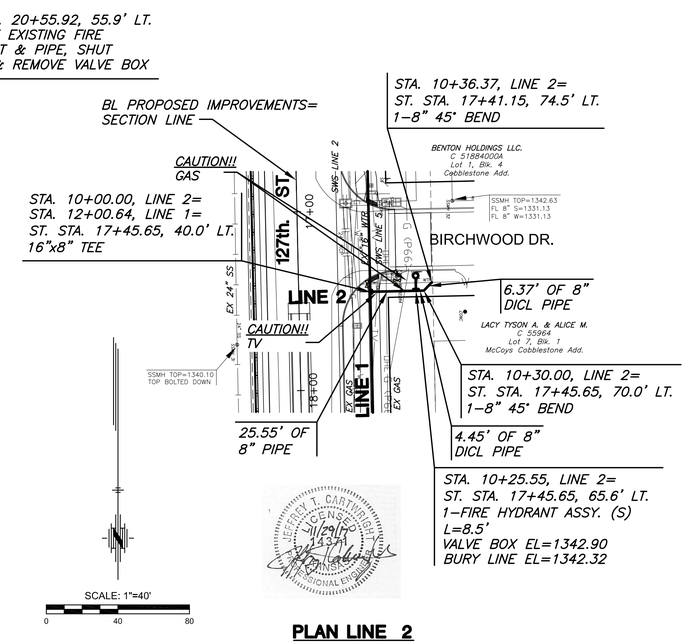

PLAN LINE 2

NOTE:
CONTRACTOR TO VERIFY LOCATION AND ELEVATION OF EXISTING WATER LINE PRIOR TO CONSTRUCTION.

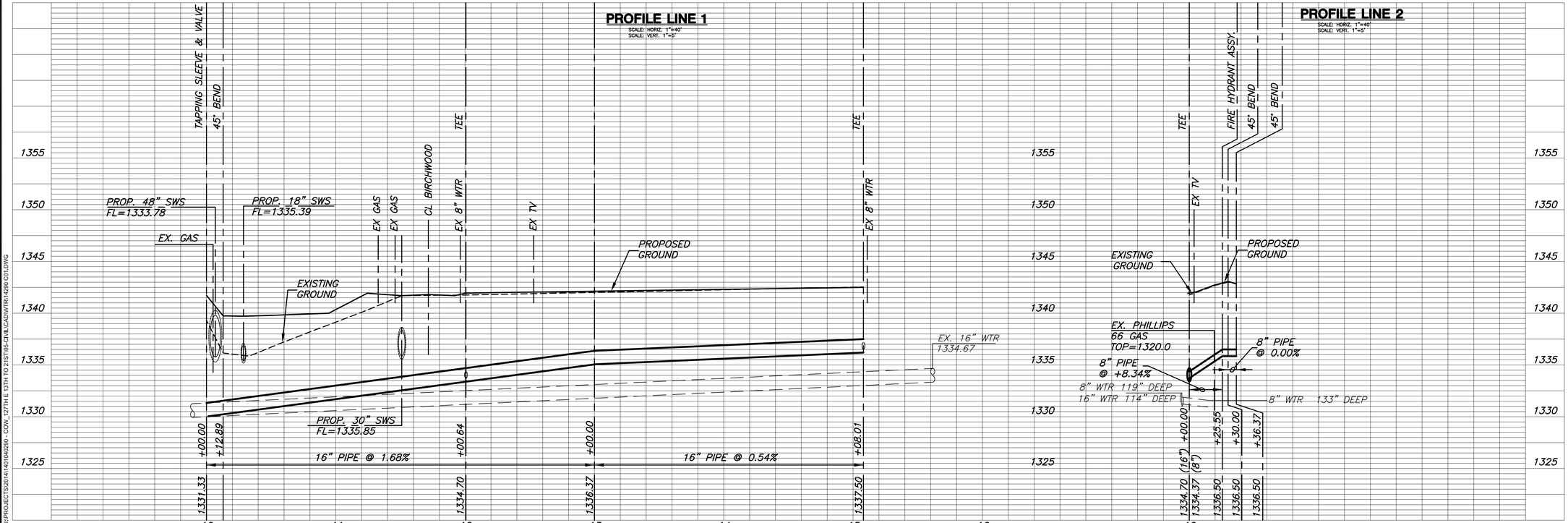

MKEC
Wichita, KS • 316-684-9600

WATER DISTRIBUTION PLANS FOR

127TH STREET EAST

FROM 13TH STREET NORTH TO 21ST STREET NORTH

©2017
MKEC Engineering
All Rights Reserved
www.mkec.com
These drawings and their contents, including, but not limited to, all concepts, designs, & ideas are the exclusive property of MKEC Engineering (MKEC), and may not be used or reproduced in any way without the express consent of MKEC.

WATER LINES 1 & 2

PROJECT NO.	472-85158
DATE	11/29/17
SCALE	AS SHOWN

DESIGNED	DRAWN	CHECKED
JTC	DM	JRA

NO.	REVISION	DATE

SHEET NO.

105 OF 183

Sh. No. 105

J:\PROJECTS\2014\140\140290 - COV_127TH E 13TH TO 21ST\05-CIVIL\CAD\WTR\140290 Cot1.DWG

PLOTTED: Wednesday, November 29, 2017 @ 04:36PM

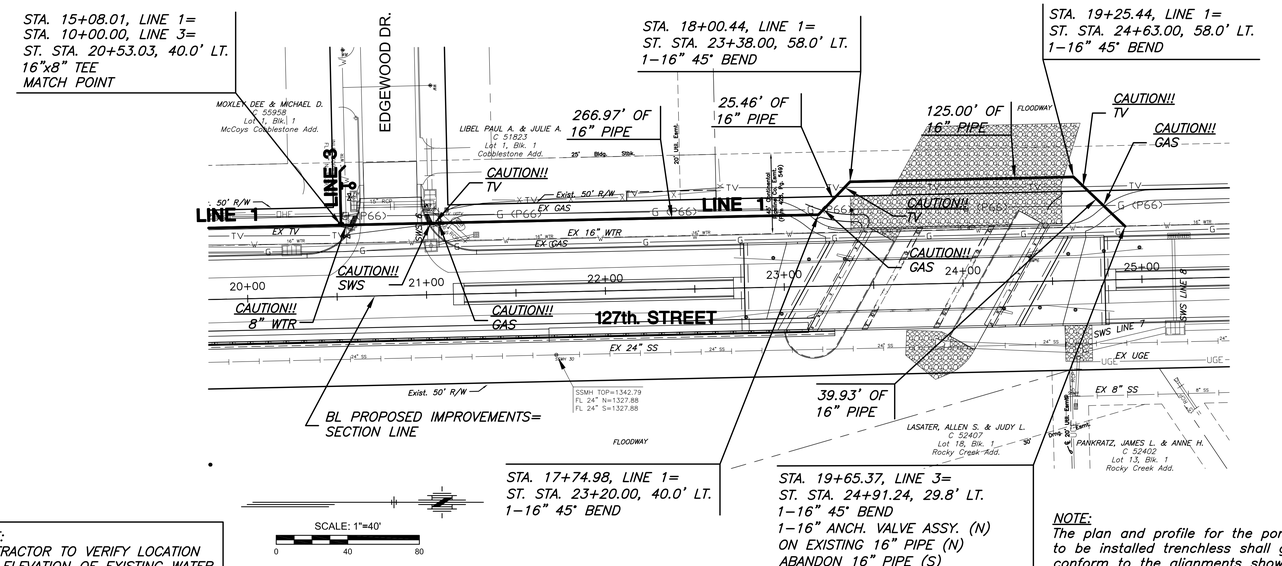

PLAN LINE 1 (CONT.)

NOTE:
CONTRACTOR TO VERIFY LOCATION AND ELEVATION OF EXISTING WATER LINE PRIOR TO CONSTRUCTION.

NOTE:
The plan and profile for the portion of Line 1 to be installed trenchless shall generally conform to the alignments shown on this sheet. The contractor shall take note of physical obstructions, above and below ground utilities, right-of-way and the proposed and existing ground elevations. Contractor shall provide as-built plan and profile information to the city after installation of the pipe.

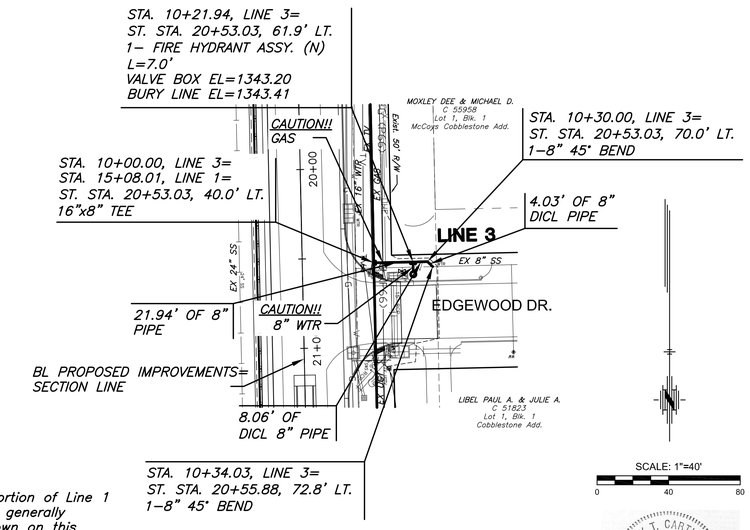

PLAN LINE 3

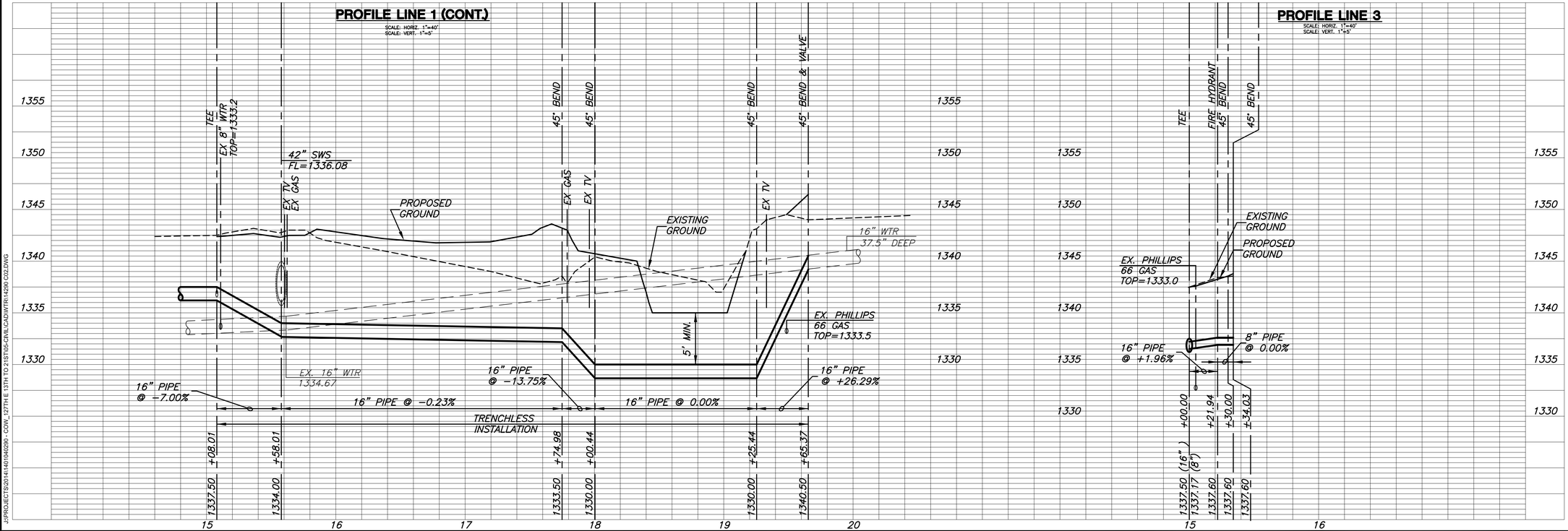

MKEC
Wichita, KS • 316-684-9600

WATER DISTRIBUTION PLANS FOR

127TH STREET EAST

FROM 13TH STREET NORTH TO 21ST STREET NORTH

©2017
MKEC Engineering
All Rights Reserved
www.mkec.com
These drawings and their contents, including, but not limited to, all concepts, designs, & ideas are the exclusive property of MKEC Engineering (MKEC), and may not be used or reproduced in any way without the express consent of MKEC.

WATER LINES 1 CONT. & 3	
PROJECT NO.	472-85158
DATE	11/29/17
SCALE	AS SHOWN
DESIGNED / DRAWN / CHECKED	JTC / DM / JRA

NO.	REVISION	DATE

SHEET NO.
106 OF 183

Sh. No. 106

J:\PROJECTS\2014\140\140260 - COV_127TH E 13TH TO 21ST\05-CIVIL\CAD\WTR\140260 C02.DWG

PLOTTED: Wednesday, November 29, 2017 @ 04:35PM

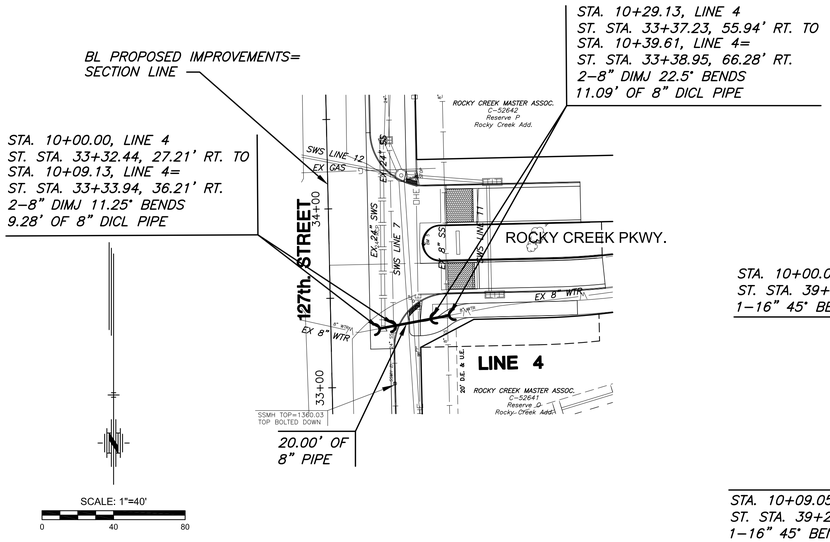

NOTE:
CONTRACTOR TO VERIFY LOCATION AND ELEVATION OF EXISTING WATER LINE PRIOR TO CONSTRUCTION.

PLAN LINE 4

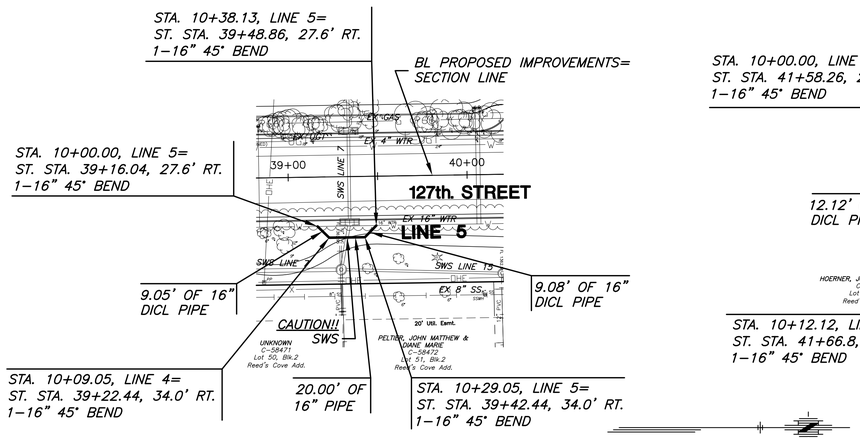

PLAN LINE 5

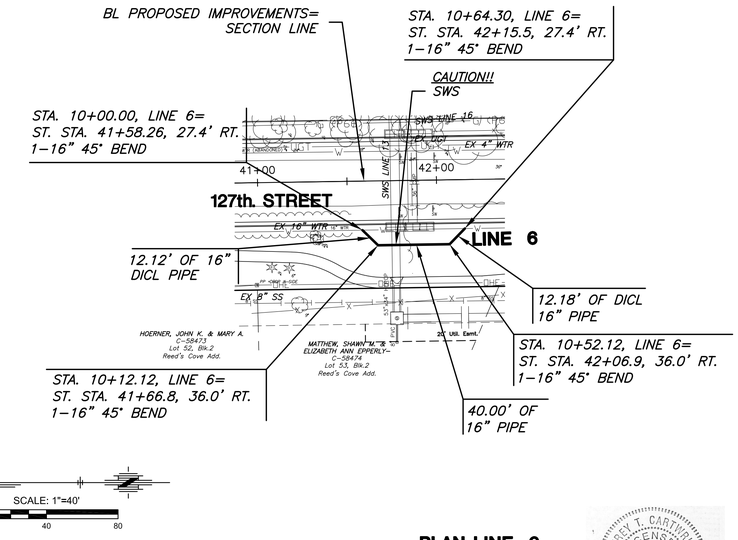

PLAN LINE 6



PROFILE LINE 4
SCALE: HORIZ. 1"=40'
SCALE: VERT. 1"=5'

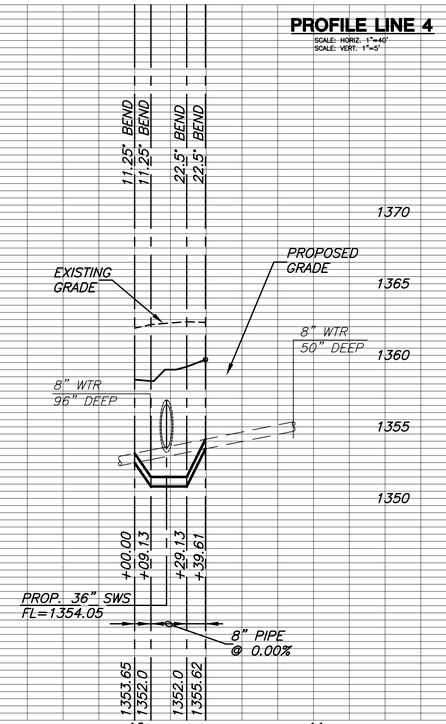

PROFILE LINE 5
SCALE: HORIZ. 1"=40'
SCALE: VERT. 1"=5'

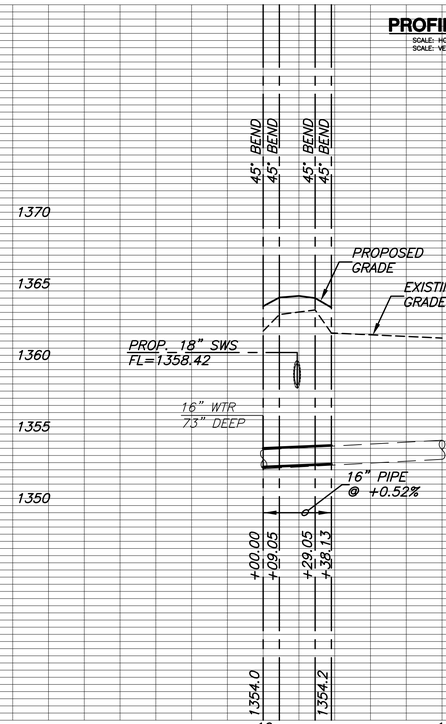

PROFILE LINE 6
SCALE: HORIZ. 1"=40'
SCALE: VERT. 1"=5'

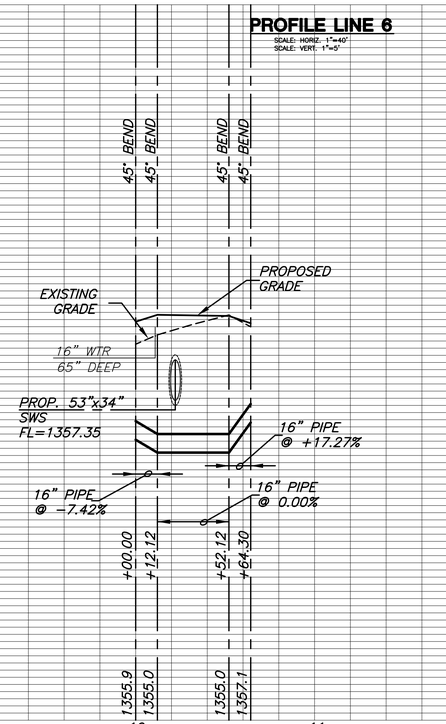

J:\PROJECTS\2014\140\140290 - COV_127TH E 13TH TO 21ST\05-CIVIL\CAD\WTR\140290 C03.DWG

MKEC
Wichita, KS • 316-684-9600

WATER DISTRIBUTION PLANS FOR

127TH STREET EAST

FROM 13TH STREET NORTH TO 21ST STREET NORTH

©2017
MKEC Engineering
All Rights Reserved
www.mkec.com
These drawings and their contents, including, but not limited to, all concepts, designs, & ideas are the exclusive property of MKEC Engineering (MKEC), and may not be used or reproduced in any way without the express consent of MKEC.

"WATER LINES 4, 5 & 6"

PROJECT NO.	472-85158
DATE	11/29/17
SCALE	AS SHOWN

DESIGNED	DRAWN	CHECKED
JTC	DM	JRA

NO.	REVISION	DATE

SHEET NO.

107 OF 183

Sh. No. 107

PLOTTED: Wednesday, November 29, 2017 @ 04:33PM

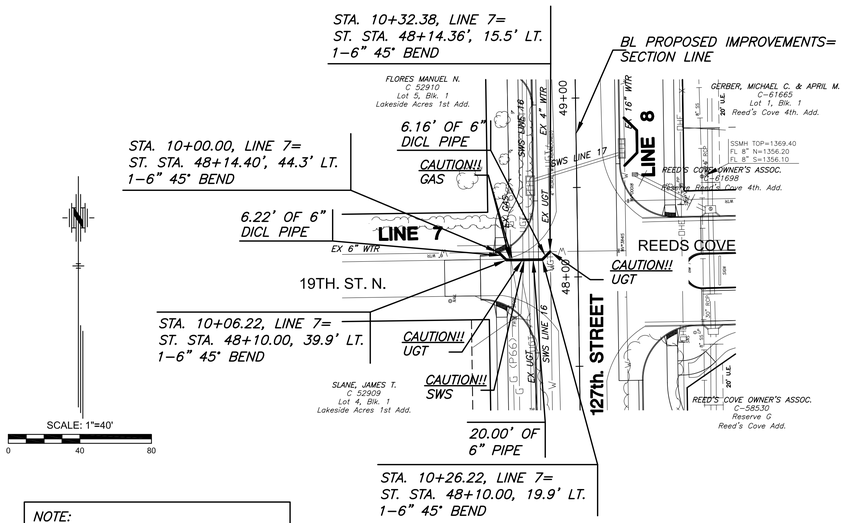

NOTE:
CONTRACTOR TO VERIFY LOCATION AND ELEVATION OF EXISTING WATER LINE PRIOR TO CONSTRUCTION.

PLAN LINE 7

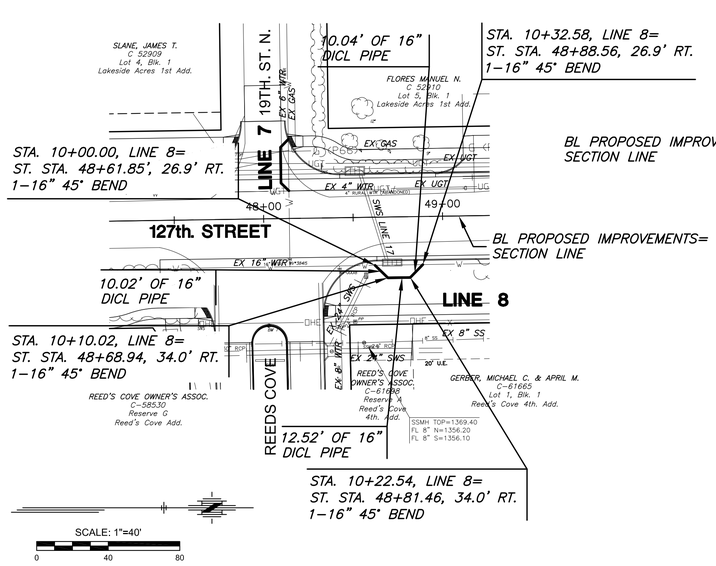

PLAN LINE 8

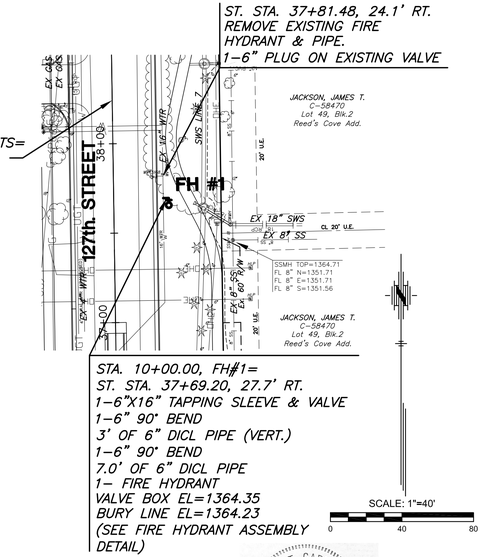

PLAN LINE FH# 1



MKEC
Wichita, KS • 316-684-9600

WATER DISTRIBUTION PLANS FOR

127TH STREET EAST

FROM 13TH STREET NORTH TO 21ST STREET NORTH

©2017
MKEC Engineering
All Rights Reserved
www.mkec.com
These drawings and their contents, including, but not limited to, all concepts, designs, & ideas are the exclusive property of MKEC Engineering (MKEC), and may not be used or reproduced in any way without the express consent of MKEC.

WATER LINES 7 & 8 & FH #1

PROJECT NO.	472-85158
DATE	11/29/17
SCALE	AS SHOWN

DESIGNED	DRAWN	CHECKED
JTC	DM	JRA

NO.	REVISION	DATE

SHEET NO.

108 OF 183

Sh. No. 108

J:\PROJECTS\2014\140\140290 - COV_127TH E 13TH TO 21ST\05-CIVIL\CAD\WTR\140290 CA4.DWG

PLOTTED: Wednesday, November 29, 2017 @ 04:39PM

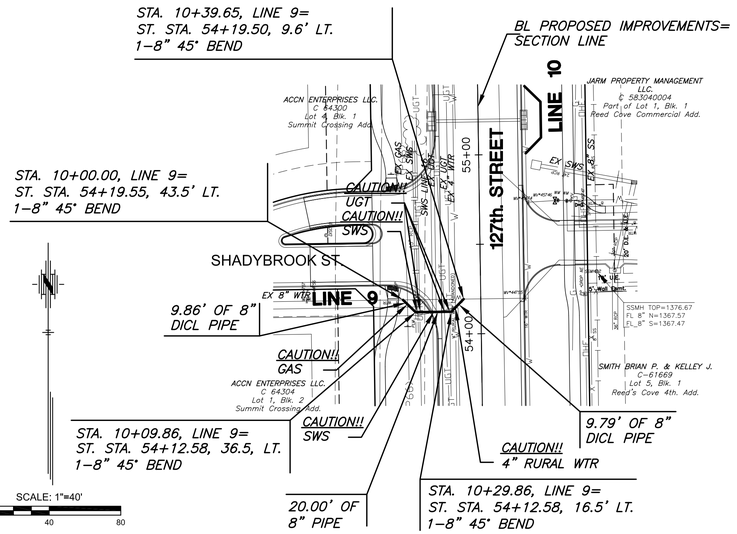

NOTE:
CONTRACTOR TO VERIFY LOCATION AND ELEVATION OF EXISTING WATER LINE PRIOR TO CONSTRUCTION.

PLAN LINE 9

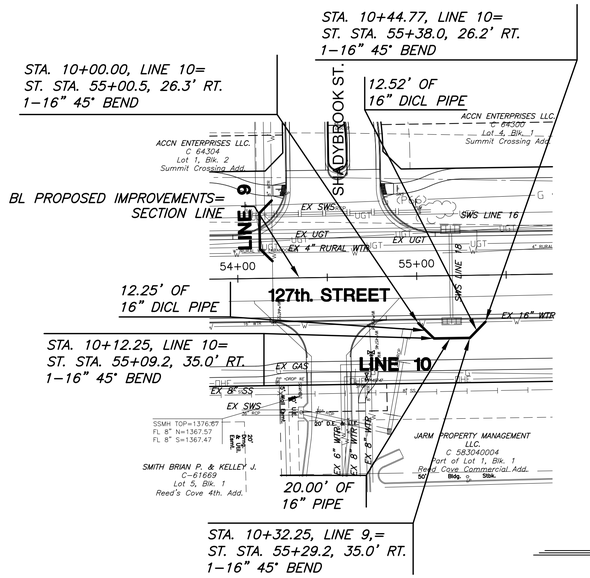

PLAN LINE 10

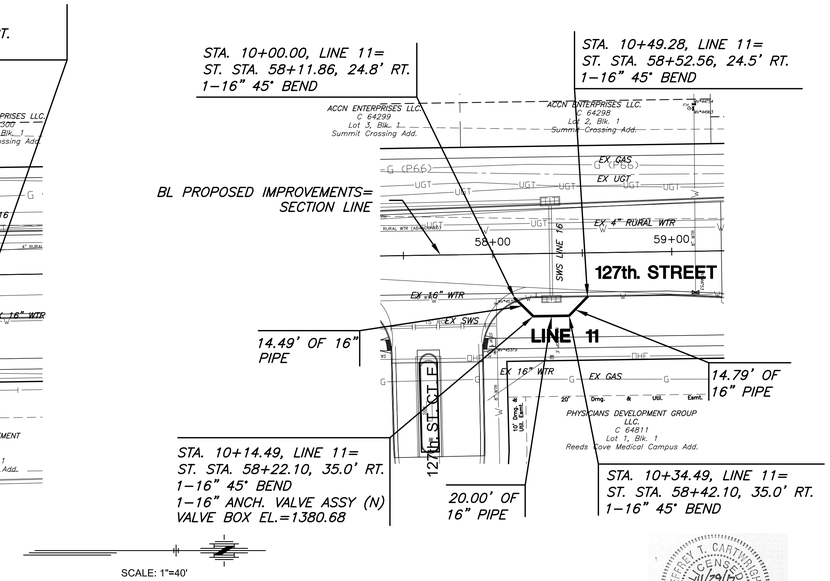

PLAN LINE 11



PROFILE LINE 9
SCALE: HORIZ. 1"=40'
SCALE: VERT. 1"=5'

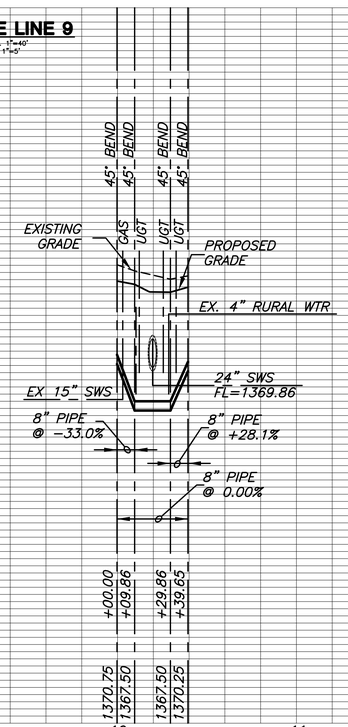

PROFILE LINE 10
SCALE: HORIZ. 1"=40'
SCALE: VERT. 1"=5'

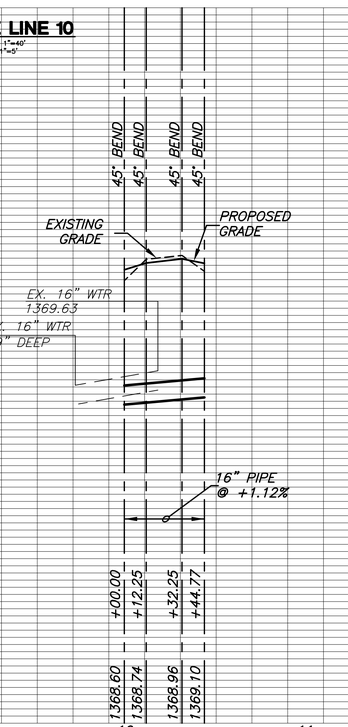

PROFILE LINE 11
SCALE: HORIZ. 1"=40'
SCALE: VERT. 1"=5'

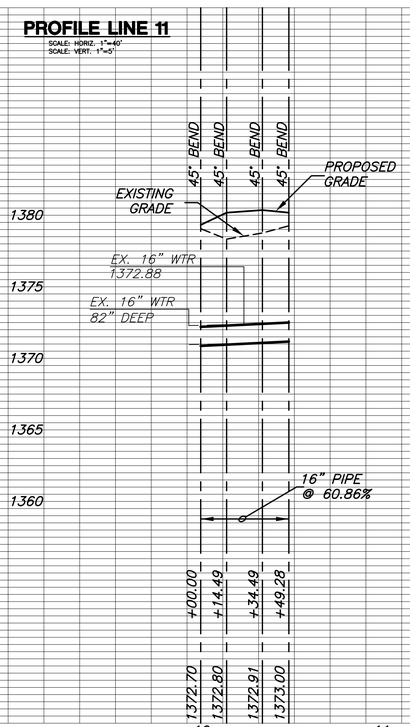

J:\PROJECTS\2014\140\140260 - COV_127TH E 13TH TO 21ST\05-CIVIL\CAD\WTR\140290 C05.DWG

MKEC
Wichita, KS • 316-684-9600

WATER DISTRIBUTION PLANS FOR

127TH STREET EAST

FROM 13TH STREET NORTH TO 21ST STREET NORTH

©2017
MKEC Engineering
All Rights Reserved
www.mkec.com
These drawings and their contents, including, but not limited to, all concepts, designs, & ideas are the exclusive property of MKEC Engineering (MKEC), and may not be used or reproduced in any way without the express consent of MKEC.

"WATER LINES 9, 10 & 11"

PROJECT NO.	472-85158
DATE	11/29/17
SCALE	AS SHOWN

DESIGNED	DRAWN	CHECKED
JTC	DM	JRA

NO.	REVISION	DATE

SHEET NO.

109 OF 183

Sh. No. 109

PLOTTED: Wednesday, November 29, 2017 @ 06:17PM

STATE	PROJECT NO.	YEAR	SHEET NO.	TOTAL SHEETS
KANSAS	87 N-0615-01	2017	110	183

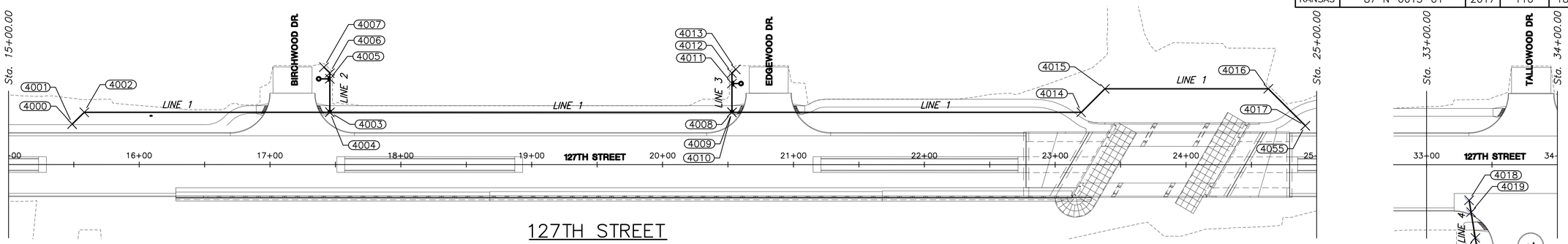

127TH STREET

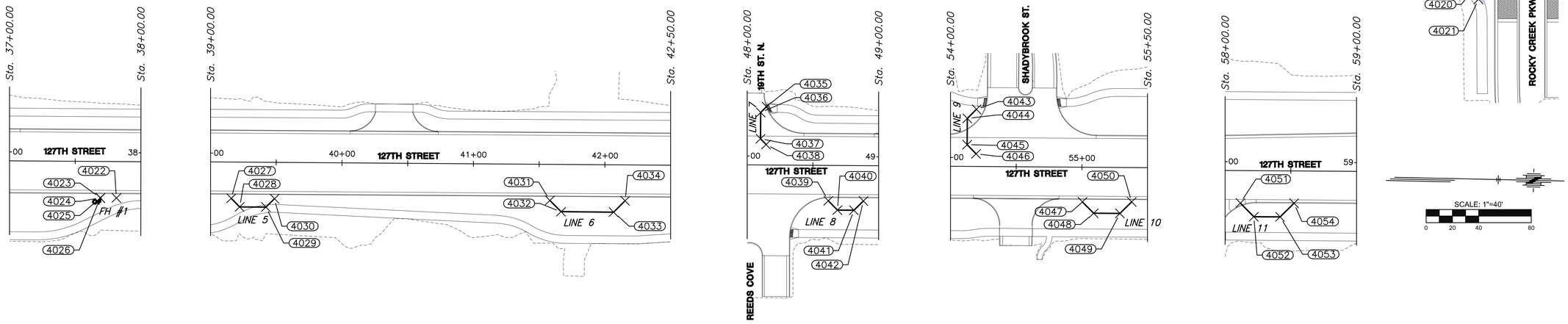

127TH STREET

WATER POINTS

Point #	Station	Offset	Northing	Easting	Desc.	WTR LINE
4000	15+48.79	30.89' LT.	1695110.07	1691566.83	16" TAPPING SLEEVE & VALVE	1
4001	15+48.79	30.89' LT.	1695110.07	1691566.83	16" 45° BEND	1
4002	15+57.90	40.00' LT.	1695118.98	1691557.52	16" 45° BEND	1
4003	17+45.65	40.00' LT.	1695306.69	1691553.42	16"X8" TEE	1
4004	17+45.65	40.00' LT.	1695306.69	1691553.42	8" ANCH. VALVE ASSY.	1
4005	17+45.65	65.55' LT.	1695306.13	1691527.87	FH	2
4006	17+45.65	70.00' LT.	1695306.04	1691523.43	8" 45° BEND	2
4007	17+41.15	74.51' LT.	1695301.43	1691519.02	8" 45° BEND	2
4008	20+53.03	40.00' LT.	1695613.99	1691546.71	16"X8" TEE	1
4009	20+53.03	40.00' LT.	1695613.99	1691546.71	16" ANCH. VALVE ASSY.	1
4010	20+53.03	40.00' LT.	1695613.99	1691546.71	8" ANCH. VALVE ASSY.	1
4011	20+53.03	61.94' LT.	1695613.51	1691524.78	FH	3
4012	20+53.03	70.00' LT.	1695613.34	1691516.72	8" 45° BEND	3
4013	20+55.88	72.85' LT.	1695616.13	1691513.81	8" 45° BEND	3
4014	23+20.00	40.00' LT.	1695880.90	1691540.89	16" 45° BEND	1
4015	23+38.00	58.00' LT.	1695898.51	1691522.50	16" 45° BEND	1
4016	24+63.00	58.00' LT.	1696023.48	1691519.77	16" 45° BEND	1
4017	24+91.24	29.76' LT.	1696052.32	1691547.39	16" 45° BEND	1
4018	33+32.44	27.21' RT.	1696894.61	1691585.98	8" 45° BEND	4

WATER POINTS

Point #	Station	Offset	Northing	Easting	Desc.	WTR LINE
4019	33+33.94	36.21' RT.	1696896.31	1691594.95	8" 45° BEND	4
4020	33+37.23	55.94' RT.	1696900.03	1691614.61	8" 45° BEND	4
4021	33+38.95	66.28' RT.	1696901.98	1691624.90	8" 45° BEND	4
4022	37+81.48	27.75' RT.	1697343.34	1691577.64	6" PLUG	FH #1
4023	37+69.20	27.74' RT.	1697331.06	1691577.82	16"X6" TAPPING SLEEVE & VALVE	FH #1
4024	37+69.20	27.74' RT.	1697331.06	1691577.82	6" 90° BEND	FH #1
4025	37+69.20	27.74' RT.	1697331.06	1691577.82	FH #1	FH #1
4026	37+69.20	27.74' RT.	1697331.06	1691577.82	6" 90° BEND	FH #1
4027	39+16.04	27.60' RT.	1697477.89	1691575.48	16" 45° BEND	5
4028	39+22.44	34.00' RT.	1697484.38	1691581.78	16" 45° BEND	5
4029	39+42.44	34.00' RT.	1697504.38	1691581.48	16" 45° BEND	5
4030	39+48.86	27.58' RT.	1697510.70	1691574.96	16" 45° BEND	5
4031	41+58.26	27.43' RT.	1697720.08	1691571.67	16" 45° BEND	6
4032	41+66.84	36.00' RT.	1697728.78	1691580.11	16" 45° BEND	6
4033	42+06.60	36.00' RT.	1697768.77	1691579.52	16" 45° BEND	6
4034	42+15.50	27.40' RT.	1697777.26	1691570.77	16" 45° BEND	6
4035	48+14.40	44.26' LT.	1698375.07	1691490.16	6" 45° BEND	7
4036	48+10.00	39.86' LT.	1698370.73	1691494.63	6" 45° BEND	7
4037	48+10.00	19.86' LT.	1698371.03	1691514.62	6" 45° BEND	7

WATER POINTS

Point #	Station	Offset	Northing	Easting	Desc.	WTR LINE
4038	48+14.36	15.50' LT.	1698375.45	1691518.91	6" 45° BEND	7
4039	48+61.85	26.92' RT.	1698423.58	1691560.62	16" 45° BEND	8
4040	48+68.94	34.00' RT.	1698430.77	1691567.59	16" 45° BEND	8
4041	48+81.46	34.00' RT.	1698443.29	1691567.40	16" 45° BEND	8
4042	48+88.56	26.90' RT.	1698450.28	1691560.20	16" 45° BEND	8
4043	54+19.55	43.47' LT.	1698980.16	1691481.88	8" 45° BEND	9
4044	54+12.58	36.50' LT.	1698973.29	1691488.95	8" 45° BEND	9
4045	54+12.58	16.50' LT.	1698973.59	1691508.95	8" 45° BEND	9
4046	54+19.50	9.58' LT.	1698980.62	1691515.77	8" 45° BEND	9
4047	55+00.50	26.34' RT.	1699062.15	1691550.46	16" 45° BEND	10
4048	55+09.17	35.00' RT.	1699070.94	1691558.99	16" 45° BEND	10
4049	55+29.17	35.00' RT.	1699090.94	1691558.70	16" 45° BEND	10
4050	55+38.02	26.15' RT.	1699099.66	1691549.71	16" 45° BEND	10
4051	58+11.86	24.75' RT.	1699373.44	1691544.21	16" 45° BEND	11
4052	58+22.10	35.00' RT.	1699383.84	1691554.30	16" 45° BEND	11
4053	58+42.10	35.00' RT.	1699403.84	1691554.00	16" 45° BEND	11
4054	58+52.56	24.54' RT.	1699414.14	1691543.39	16" 45° BEND	11
4055	24+91.24	29.76' LT.	1696052.32	1691547.39	16" ANCH. VALVE ASSY.	1

MKEC
Wichita, KS • 316-684-9600

STREET IMPROVEMENTS FOR

127TH STREET EAST

FROM 13TH STREET NORTH TO 21ST STREET NORTH

©2017
MKEC Engineering
All Rights Reserved
www.mkec.com
These drawings and their contents, including, but not limited to, all concepts, designs, & ideas are the exclusive property of MKEC Engineering (MKEC), and may not be used or reproduced in any way without the express consent of MKEC.

WATER LINE BUBBLE MAP

PROJECT NO.	472-85158
DATE	11/29/17
SCALE	1"=40'

DESIGNED	DRAWN	CHECKED
JRA	RAM	JRA

NO.	REVISION	DATE

SHEET NO.

110 OF 183

Sh. No. 110

J:\PROJECTS\2014\140104292\ - COW_127TH E 13TH TO 21ST\05-CIVIL\CAD\WTR\142905B01.DWG

PLOTTED: Wednesday, November 29, 2017 @ 03:19PM

TREE REMOVAL

Location	Offset	Large	Small	Tree Row (lf)	Site Clearing (ac)
127th St. East					
12+50 to 15+50	Lt.				0.14
15+55 to 23+25	Rt.				0.39
23+05 to 24+67	Lt.				0.27
35+16.21	41.38' Rt.		1		
35+33.37	46.11' Rt.		1		
36+58.12	42.00' Rt.	1			
36+80.34	44.55' Rt.		1		
36+94.76	47.83' Rt.		1		
37+06.48	52.84' Rt.		1		
37+10.07	44.00' Rt.		1		
37+27.34	37.14' Rt.		1		
37+29.08	50.95' Rt.		1		
37+41.30	45.95' Rt.		1		
37+61.31	31.43' Lt.	1			
37+93.65	31.01' Lt.	1			
37+99.96	27.64' Lt.	1			
38+13.21	29.09' Lt.	1			
38+13.73	34.16' Lt.	1			
38+15.72	36.82' Lt.	1			
38+16.19	33.39' Lt.	1			
38+48.70	36.63' Rt.	1			
38+60.23	29.69' Lt.	1			
38+85.29	30.98' Rt.		1		
38+87.00	30.73' Rt.		1		
38+89.98	29.04' Lt.	1			
38+95.43	48.43' Lt.	1			
38+97.45	29.22' Rt.	1			
38+97.62	38.12' Rt.	1			
39+00.90	29.02' Lt.	1			
39+03.39	29.34' Lt.	1			
39+08.77	27.93' Lt.	1			
39+13.32	30.41' Lt.	1			
39+18.09	28.99' Lt.	1			
39+28.51	32.65' Lt.	1			
39+32.38	32.52' Lt.	1			
39+34.33	37.41' Lt.	1			
39+45.28	39.5' Lt.	1			
39+46.10	30.93' Lt.	1			
39+72.17	29.6' Lt.	1			
39+75.74	30.01' Lt.	1			
39+84.05	31.34' Lt.	1			
39+92.29	31.9' Lt.	1			
39+95.94	30.62' Lt.	1			
39+97.36	30.7' Lt.	1			
40+01.89	30.06' Lt.	1			
40+10.58	29.42' Lt.	1			
40+20.20	29.52' Lt.	1			
40+62.68	30.76' Lt.	1			
41+02.53	31.08' Lt.	1			
41+07.36	47.36' Rt.		1		
41+09.83	31.23' Lt.	1			
41+12.68	31.44' Lt.	1			
41+31.44	29.79' Lt.	1			
41+31.99	32.16' Rt.		1		
41+32.05	30.17' Rt.		1		
41+33.49	32.24' Rt.		1		
41+50.04	28.16' Lt.	1			
41+54.13	32.27' Lt.	1			
41+74.68	25.3' Lt.	1			
41+84.35	30.13' Lt.	1			
41+92.52	27.38' Lt.	1			
41+97.97	42.26' Lt.	1			
42+00 to 47+80	Rt.			580.0	
42+01.92	45.73' Lt.	1			
42+16.67	26.48' Lt.	1			
42+39.67	28.87' Lt.	1			
42+51.37	38.91' Lt.	1			
42+69.90	38.62' Lt.	1			

TREE REMOVAL

Location	Offset	Large	Small	Tree Row (lf)	Site Clearing (ac)
127th St. East					
43+23.01	29.53' Lt.	1			
43+37.01	27.93' Lt.	1			
43+61.70	36.02' Lt.	1			
43+97.77	35.34' Lt.	1			
44+14.60	26.65' Lt.	1			
44+21.28	27.88' Lt.	1			
44+31.80	25.28' Lt.	1			
44+40.44	26.1' Lt.	1			
48+48.77	42.65' Lt.	1			
44+50 to 47+80	Lt.			330.0	
48+30 to 49+10	Lt.			100.0	
48+66.47	40.24' Lt.	1			
48+88.71	41.09' Lt.	1			
49+00 to 51+50	Rt.			250.0	
49+50 to 51+30	Lt.			180.0	
51+45.80	39.04' Lt.	1			
53+08.26	41.40' Rt.	1			
	Totals	**62**	**15**	**1440.0**	**0.80**

PVC CONDUIT

Location *	Side	Pipe 4" PVC (lf)	Remarks
33+60.61	Rt.	23.0	Rocky Creek EB Lanes
33+60.61	Rt.	23.0	Rocky Creek EB Lanes
33+60.61	Rt.	23.0	Rocky Creek EB Lanes
34+00.61	Rt.	27.0	Rocky Creek WB Lanes
34+00.61	Rt.	27.0	Rocky Creek WB Lanes
34+00.61	Rt.	27.0	Rocky Creek WB Lanes
47+82.49	Rt.	26.0	Reed's Cove EB Lanes
47+82.49	Rt.	26.0	Reed's Cove EB Lanes
47+82.49	Rt.	26.0	Reed's Cove EB Lanes
48+22.54	Rt.	26.0	Reed's Cove WB Lanes
48+22.54	Rt.	26.0	Reed's Cove WB Lanes
48+22.54	Rt.	26.0	Reed's Cove WB Lanes
54+39.63	Lt.	28.0	Shady Brook EB Lanes
54+39.63	Lt.	28.0	Shady Brook EB Lanes
54+39.63	Lt.	28.0	Shady Brook EB Lanes
54+69.82	Lt.	23.0	Shady Brook WB Lanes
54+69.82	Lt.	23.0	Shady Brook WB Lanes
54+69.82	Lt.	23.0	Shady Brook WB Lanes
57+50.78	Rt.	21.0	127th Ct. EB Lanes
57+50.78	Rt.	21.0	127th Ct. EB Lanes
57+50.78	Rt.	21.0	127th Ct. EB Lanes
57+80.95	Rt.	31.0	127th Ct. WB Lanes
57+80.95	Rt.	31.0	127th Ct. WB Lanes
57+80.95	Rt.	31.0	127th Ct. WB Lanes
Totals		**615.0**	

* Exact Location to be field determined

STATE	PROJECT NO.	YEAR	SHEET NO.	TOTAL SHEETS
KANSAS	87 N-0615-01	2017	111	183

DRIVEWAY PAVEMENT

Location	Side	P (ft)	X (ft)	Width (ft)	Concrete Driveway 8" (Reinf.) (sf)	AC Pavement 5" (sy)	Concrete C & G, Type 1 (6" & 1-1/2") (lf)	Concrete Flume (lf)	Remarks
11+85.82	Rt.							11.0	
12+00.24	Rt.	46.42	46.42	25.0	710.0	56.0	49.9		
12+12.74	Rt.							11.0	
38+33.77	Lt.	25.50	23.50	22.0	644.0				
40+39.60	Lt.	25.50	20.50	28.6	733.0				
42+90.00	Lt.	25.50	15.50	16.0	342.9				
45+89.60	Lt.	25.50	15.50	22.0	435.9				
49+25.95	Lt.	25.50	20.37	27.8	635.7				
54+50.13	Rt.	35.50	35.50	25.0	884.2	16.0	14.0		
				Totals	**4,385.7**	**72.0**	**63.9**	**22.0**	

P = Distance from back of curb to right-of-way line. X = Distance from back of curb to limit of driveway paving

CONCRETE PAVEMENT

LOCATION (STATION TO STATION)	SIDE	Concrete Pavement 12" (Reinf) (sy)	Concrete Approach 12", Bridge (sy)	Concrete Pavement 15" (Reinf) (sy)	Crushed Rock Base 6", Reinforced (sy)	Concrete Bridge Approach Slab Footing (cy)	Concrete Safety Barrier (lf)	Concrete Safety Barrier, special (lf)
16+27.98 - 23+12.98	Rt.						685.0	
16+27.98 - 23+16.88	Rt.			610.4				
22+77.93 - 24+79.18	Lt.							98.9
22+77.93	C/L					14.5		
22+77.93 - 23+11.79	C/L	170.5			151.5			
23+11.79	C/L					16.8		
23+12.08 - 23+27.12	C/L		71.2		54.8			
24+31.47 - 24+79.18	Rt.							63.6
24+30.00 - 24+45.04	C/L		83.4		64.2			
24+45.47	C/L					16.8		
24+45.47 - 24+79.18	C/L	188.1			165.8			
24+79.18	C/L					14.5		
	Totals	**358.6**	**154.6**	**610.4**	**436.3**	**62.6**	**685.0**	**162.5**

EARTHWORK

Location	EXCAVATION ITEMS					Fill, Compacted (95% Density) (cy)	Remarks
	Pavement Removed∆ (sy)	Sidewalk, Drive, &/or Pkg Lot Removed* (sy)	Excavation, Special (cy)	Excavation (cy)	VMF		
127th St.	18,026.1	607.4	84.5	20,909.5	0.8	6,362.1	
Totals	**18,026.1**	**607.4**	**84.5**	**20,909.5**		**6,362.1**	

* Includes all sidewalk, ramps, driveways, bus pads and all pavement on private property.

∆Pavement removed is calculated using 6" pavement thickness. Thicknesses may vary.

TEMPORARY PAVEMENT WIDENING

STATION	OFFSET	AC Pavement 6", Temporary (Phase Shifts) (sy)	Crushed Rock Base 5", Temporary (sy) (subsidiary)	Remarks
Traffic Control				
13+45.2 - 16+91.3	Lt.	365.5	365.5	
	Total	**365.5**	**365.5**	

SUMMARY OF WATER ITEMS

Line No.	Pipe, DICL 6" (lf)	Pipe, DICL 8" (lf)	Pipe, DICL 16" (lf)	Pipe, WL 6" (lf)	Pipe, WL 8" (lf)	Pipe, WL 16" (lf)	Pipe, WL 16", Trenchless (lf)	Valve Assembly, 8" (ea)	Valve Assembly, 16" (ea)	Fire Hydrant Assembly (ea)	Fire Hydrant (ea)	Fire Hydrant Removal* (ea)	Cut and Cap (ea)	Valve Box Adjusted (ea)	Valve Box Removed (ea)	Water Meter Relocated (ea)	Water Meter Adjusted (ea)	AC Pavement 6", Temporary (Utility Patch) (sy)
Line 1			12.9			495.1	457.4	2	2			2	2					
Line 2		10.8			25.6					1								
Line 3		12.1			21.9					1								
Line 4		20.4			20.0													
Line 5			18.1			20.0												
Line 6			24.3			40.0												
Line 7	12.4			20.0														
Line 8			32.6															
FH #1	10.0										1	1						
Line 9		19.6			20.0													
Line 10			24.8			20.0												
Line 11						49.3			1									
Project														21	6	11	2	150.00
Totals	**23.0**	**62.9**	**112.7**	**20.0**	**87.5**	**624.4**	**457.4**	**2**	**3**	**2**	**1**	**3**	**2**	**21**	**6**	**11**	**2**	**150.00**

*For information only. Subsidiary to "Removal of Existing Structures"

MKEC
Wichita, KS • 316-684-9600

STREET IMPROVEMENTS FOR 127TH STREET EAST FROM 13TH STREET NORTH TO 21ST STREET NORTH

©2017
MKEC Engineering
All Rights Reserved
www.mkec.com
These drawings and their contents, including, but not limited to, all concepts, designs, & ideas are the exclusive property of MKEC Engineering (MKEC), and may not be used or reproduced in any way without the express consent of MKEC.

SUMMARY OF QUANTITIES

PROJECT NO.	472-85158
DATE	11/29/17
SCALE	NTS
DESIGNED	JRA
DRAWN	LES
CHECKED	JRA

NO.	REVISION	DATE

SHEET NO.

111 OF 183

J:\PROJECTS\2014\1401040290 - CONV_127TH E 13TH TO 21ST\05-CIVIL\CADD\QUANTITIES\14290EQD01.DWG

PLOTTED: Wednesday, November 29, 2017 @ 03:19PM

SIDEWALK CONSTRUCTION

Location	Side	Concrete Sidewalk 4" (sf)	Concrete Sidewalk 5" (reinf.) (sf)	Sidewalk Thickening (lf)	Wheelchair Ramp w/ Detectable Warnings (ea)	Concrete Sidewalk Protection Curb (lf)	Concrete Sidewalk Protection Curb, Special (lf)	Handrail, Pedestrian (lf)	Remarks
127TH STREET									
10+56.43 to 16+89.38	Lt.	3,853.0		446.0					
16+89.38 to 16+98.60	Lt.				1				
17+35.57 to 17+45.14	Lt.				1				
17+45.14 to 20+53.38	Lt.	1,849.5							
20+53.38 to 20+62.55	Lt.				1				
20+99.60 to 21+08.77	Lt.				1				
21+08.77 to 23+45.56	Lt.	1,465.6		18.0					
23+25.43 to 23+45.27	Lt.						19.8		
23+38.96 to 23+44.29	Lt.							5.3	
24+48.21 to 24+56.06	Lt.						7.9		
24+48.50 to 28+66.84	Lt.	2,580.8		25.0					
24+49.77 to 24+55.11	Lt.							5.3	
28+66.84 to 28+76.66	Lt.				1				
29+15.29 to 29+25.12	Lt.				1				
29+25.12 to 33+50.75	Lt.	2,553.8							
33+50.75 to 33+60.71	Lt.				1				
33+99.17 to 34+09.11	Lt.				1				
34+09.11 to 36+15.86	Lt.	1,242.0							
36+15.86 to 36+27.86	Lt.		240.0						12' Wide Sidewalk
36+21.86	Lt.				1				
36+27.86 to 38+22.77	Lt.	1,171.0							
38+44.77 to 40+25.22	Lt.	1,087.4							
40+53.80 to 42+82.00	Lt.	1,374.0							
42+98.00 to 45+78.60	Lt.	1,683.6							
46+00.60 to 47+78.15	Lt.	1,071.5							
47+78.15 to 47+86.98	Lt.				1				
48+13.76 to 48+22.61	Lt.				1				
48+22.61 to 49+12.06	Lt.	547.0							
49+39.84 to 54+20.34	Lt.	2,921.0							
54+20.34 to 54+27.55	Lt.				1				
54+80.68 to 54+87.81	Lt.				1				
54+87.81 to 62+51.82	Lt.	4,631.3							
33+28.00 to 33+35.83	Rt.	45.7							
33+35.83 to 33+47.55	Rt.				1				
33+28.00 to 33+41.77	Rt.	708.0							8' Wide Sidewalk @ Rocky Creek
34+12.31 to 34+20.15	Rt.				1				
34+20.15 to 36+15.86	Rt.	1,179.0							
36+15.86 to 36+27.86	Rt.		360.0						12' Wide Sidewalk
36+21.86	Rt.				1				
36+27.86 to 47+60.75	Rt.	6,880.0							
47+44.30 to 47+57.33	Rt.	160.8							8' Wide Sidewalk @ Reeds Cove
47+60.75 to 47+70.29	Rt.				1				
48+32.96 to 48+39.37	Rt.				1				
48+39.47 to 54+37.63	Rt.	3,589.8							
54+62.63 to 57+36.29	Rt.	1,718.7							
57+36.29 to 57+42.33	Rt.				1				
57+93.87 to 58+00.83	Rt.				1				
58+00.83 to 89+42.94	Rt.	856.1							
59+42.94 to 59+49.99	Rt.				1				
59+86.10 to 59+92.03	Rt.				1				
59+92.03 to 60+74.71	Rt.	497.0							
Various Locations						150.0			not shown in plans
Totals		**43,666.5**	**600.0**	**489.0**	**22**	**150.0**	**28**	**11**	

BRICK PAVERS

Location	Side	Brick Pavers (sy)	Concrete Base 8" (Reinf.)* (sy)	Remarks
33+53.61 to 33+68.36	66' Rt.	24.6	31.0	
33+90.86 to 34+09.61	66' Rt.	31.3	41.0	
Totals		**55.8**	**72.0**	

* Concrete base below the pavers will be measured and paid for separately. Crushed Rock Base will be measured and paid for as part of the bid item "Crushed Rock Base 6", Reinforced".

*The concrete band on the east side of the pavers is included in the concrete base quantity.

CONCRETE CURB AND GUTTER

Location	Side	Concrete C & G, Type 1 (6" & 1-1/2") (lf)	Concrete C & G, Type 3 (8" & 1-1/2") (lf)	Concrete Ramp Nose Section (ea)	Remarks
11+29.64 to 16+27.72	Rt.	498.4			
11+29.64 to 17+17.09	Lt.	587.5			
12+32 to 15+29	Lt.		285.0	1	median
12+32 to 15+29	Rt.		285.0	1	median
17+17.09 to 20+81.07	Lt.	363.6			
17+51 to 18+93	Lt.		130.0	1	median
17+51 to 18+93	Rt.		130.0	1	median
20+81.07 to 22+77.93	Lt.	196.4			
21+15 to 22+77.68	Lt.		150.7	1	median
21+15 to 22+77.68	Rt.		150.7	1	median
24+79.43 to 26+96	Lt.		204.6	1	median
24+79.43 to 26+96	Rt.		204.6	1	median
24+79.18 to 28+95.98	Lt.	416.2			
24+79.18 to 33+79.62	Rt.	977.9			
28+95.98 to 33+79.93	Lt.	483.1			
29+36 to 31+86	Lt.		250.0	1	median
29+30 to 31+92	Rt.		250.0	1	median
33+79.62	Rt.	163.0	162.0		Rocky Creek
33+79.93 to 48+00.37	Lt.	1,424.9			
34+00 to 48+02.39	Rt.	1,515.2			
35+66 to 36+16	Lt.		38.0	1	median
35+66 to 36+16	Rt.		38.0	1	median
36+28 to 37+00	Lt.		60.0	1	median
36+28 to 37+00	Rt.		60.0	1	median
43+20 to 44+57	Lt.		125.0	1	median
43+20 to 44+57	Rt.		125.0	1	median
48+00.37 to 54+40	Lt.	689.4			
48+02.39	Rt.	62.0	62.0		Reeds Cove
48+02.39 to 57+63.06	Rt.	1,047.5			
49+88 to 52+74	Lt.		274.0	1	median
49+88 to 52+74	Rt.		274.0	1	median
54+56.58	Lt.	74.0	70.0		Shadybrook
54+70 to 60+29.78	Lt.	610.2			
55+85 to 57+25	Lt.		128.0	1	median
55+85 to 57+25	Rt.		128.0	1	median
57+63.06	Rt.	106.0	106.0		127th St. Ct.
57+63.06 to 59+27.74	Rt.	208.9			
Totals		**9,424.1**	**3,690.5**	**20**	

ASPHALT PAVEMENT AND BASE

Location	Side	AC Pavement 7" (5" Bit Base) (sy)	Crushed Rock Base 8", Reinforced (sy)	Remarks
11+29.64 to 22+77.68	cl	4,608.0	5,977.0	
24+79.43 to 59+27.74	cl	15,771.0	19,717.0	
Rocky Creek		234.0	333.0	
Reeds Cove		116.0	160.0	
Shadybrook		135.0	185.0	
127th St. Ct.		198.0	275.0	
Totals		**21,062.0**	**26,647.0**	

REMOVAL OF EXISTING PIPES AND STORM STRUCTURES*

Location	Offset	Item	Remarks
127th Street			
15+25.0 - 21+35.0	32.0' Lt.	610' of 16" Water Line	
15+39.5	C/L	2-36"x75.1' RCP & 1 End Section	
16+91.0 - 17+42.9	27.0' Lt.	24"x51.8' RCP	
17+42.0	70.0' Lt.	30' of 8" Water Line	
20+55.0	70.0' Lt.	30' of 8" Water Line	
20+60.2	50.1' Lt.	Curb Inlet	
20+60.2 - 21+02.5	50.0' Lt.	15"x38.0' RCP	
21+02.5	49.9' Lt.	Curb Inlet	
21+02.5 - 21+23.9	49.9' - 29.6' Lt.	30"x29.5' RCP	
23+40.0 - 24+60.0	32.0' Lt.	120' of 16" Water Line	
28+12.6 - 28+17.1	45.6' - 49.6' Rt.	18"x6.0' RCP & 1 End Section	
32+62.1 - 32+63.7	45.0' - 50.8' Rt.	15"x6.0' RCP & 1 End Section	
33+31.0 - 34+38.7	30.0' Rt.	24"x101.8' RCP & 2 End Sections	
33+40.0	40.0' Rt.	40' of 8" Water Line	
37+61.5 - 37+66.4	44.9' - 52.6' Rt.	18"x7.6' RCP & 1 End Section	
38+17.2 - 38+49.9	22.9' Lt.	15"x32.6' RCP	
38+43.7	43.5' - 51.8' Rt.	12"x10.7' PVC	
39+20.0 - 39+50.0	28.0' Rt.	30' of 16" Water Line	
39+28.8	38.6' - 54.4' Rt.	12"x15.8' PVC	
40+24.7 - 40+56.1	22.4' Lt.	12"x31.4' RCP	
41+60.0 - 42+10.0	28.0' Rt.	50' of 16" Water Line	
41+70 - 41+95	27.0' Lt.	25' Abandoned Gas Line	
41+76.8	76.9' Rt.	Manhole	
41+76.8 - 41+77.1	54.1' - 76.9' Rt.	34"x53"x14.6' HERCP & 1 End Section	
41+87.7	C/L	36"x35.3' CMP	
42+68.4 - 42+97.3	23.1' Lt.	18"x28.9' CMP	
45+74.6 - 45+98.5	20.0' Lt.	15"x24.0' CMP	
48+15.0	30.0' Lt.	30' of 8" Water Line	
48+36.8 - 48+56.8	32.6' - 71.6' Rt.	24"x43.8' RCP	
48+56.8	32.6' Rt.	Inlet	
48+60.0 - 48+90.0	28.0' Rt.	30' of 16" Water Line	
49+11.7 - 49+35.8	21.6' Lt.	15"x24.2' Lt.	
54+01.1 - 55+08.4	36.0' Lt.	15"x107.4' RCP	
54+20.0	25.0' Lt.	40' of 8" Water Line	
54+88.1 - 54+93.3	34.7' - 62.5' Rt.	24"x28.2' RCP	
54+93.3	34.7' Rt.	Double Drop Inlet	
55+00.0 - 55+40.0	28.0' Rt.	40' of 16" Water Line	
55+97.8	41.5' Rt.	Concrete Weir Structure	
57+34.9 - 58+01.1	40.0' Rt.	15"x66.2' RCP	
58+15.0 - 58+55.0	28.0' Rt.	40' of 16" Water Line	

*This list does not necessarily constitue a complete list of all items to be removed during construction. This list is provided for information only. Pavement removeal and tree removal are paid for separately. Pipe removal and inlet/manhole removal will aslo be paid for separately but are noted in this table. Sign removals are shown on the signing plans, water valves and meters to be removed are noted in the utility adjustment table on the paving plan sheets.

REINFORCED CONCRETE VALLEY GUTTER

Location	Side	Concrete Pavement (VG) 8" (Reinf.) (sy)	Crushed Rock Base 7", Reinforced (sy)	Concrete Curb, Mono Edge (6" & 1-1/2") (lf)	Concrete Curb, Mono Edge (8") (lf)	Retaining Wall, Modular Block (sf -face)	Asphalt Hookup (sy)	Remarks
17+17.09	22' Lt.	185.6	205.9	96.0			66.3	Birchwood Dr.
20+81.07	22' Lt.	185.6	205.9	96.1			66.3	Edgewood Dr.
28+95.98	22' Lt.	186.1	227.5	95.8			66.7	Castlewood Dr.
33+81.61	22' Rt.	370.3	385.9	107.8	40.0	305.0		Rocky Creek Pkwy.
33+79.93	22' Lt.	186.5	196.8	95.9			67.0	Tallowood Dr.
48+00.37	22' Lt.	150.0	160.4	96.2			45.2	19th St. N.
48+02.33	22' Rt.	400.4	415.9	113.8	31.4	93.5		Reeds Cove
54+54.12	22' Lt.	279.4	292.5	106.8	18.0			Shadybrook
57+68.10	22' Rt.	267.5	279.0	106.8	15.8			127th St. Ct.
Totals		**2211.5**	**2369.8**	**915.2**	**105.2**	**398.5**	**311.5**	

STATE	PROJECT NO.	YEAR	SHEET NO.	TOTAL SHEETS
KANSAS	87 N-0615-01	2017	112	183

MKEC
Wichita, KS • 316-684-9600

STREET IMPROVEMENTS FOR

127TH STREET EAST

FROM 13TH STREET NORTH TO 21ST STREET NORTH

©2017
MKEC Engineering
All Rights Reserved
www.mkec.com
These drawings and their contents, including, but not limited to, all concepts, designs, & ideas are the exclusive property of MKEC Engineering (MKEC), and may not be used or reproduced in any way without the express consent of MKEC.

SUMMARY OF QUANTITIES

PROJECT NO.	472-85158
DATE	11/29/17
SCALE	NTS

DESIGNED	DRAWN	CHECKED
JRA	LES	JRA

NO.	REVISION	DATE

SHEET NO.

112 OF 183

Sh. No. 112

J:\PROJECTS\2014\140104\290 - COW_ 127TH E 13TH TO 21ST\05-CIVIL\CADD\QUANTITIES\140290D02.DWG

PLOTTED: Wednesday, November 29, 2017 @ 03:20PM

STATE	PROJECT NO.	YEAR	SHEET NO.	TOTAL SHEETS
KANSAS	87 N-0615-01	2017	113	183

RECAPITULATION OF QUANTITIES			
LINE NO.	BID ITEM DESCRIPTION	QUANTITY	UNIT
	Lump Sum Bid Items - Paving		
1	Mobilization	1	LS
2	Removal of Existing Structures	1	LS
3	Transport of Salvaged Materials (Non-Participating)	1	LS
4	Site Clearing	1	LS
5	Site Restoration	1	LS
6	Pavement &/or Curb Removed	18,027	sy
7	Excavation	20,910	cy
8	Fill, Compacted (95% Density)	6,363	cy
9	Fill, Select	1,573	cy
10	Crushed Rock Base 8", Reinforced	26,647	sy
11	Crushed Rock Base 7", Reinforced	2,370	sy
12	Crushed Rock Base 6", Reinforced	437	sy
13	Retaining Wall, Modular Block	399	sf-face
14	Temporary Shoring	1	LS
	Lump Sum Bid Items - Bridge		
15	Class I Excavation	167	cy
16	Class II Excavation	82	cy
17	Concrete (Grade 4.0)(AE)	47	cy
18	Concrete (Grade 4.0)(AE)(SA)	215	cy
19	Reinforcing Steel (Grade 60)	76,540	lbs
20	Construction Staking, Bridge	1	LS
	Lump Sum Bid Items - Landscaping		
21	Seeding	1	LS
22	Sodding	1	LS
23	Tree Row Removed	1,440	lf
	Lump Sum Bid Items - Traffic		
24	Pavement Marking	1	LS
25	Signing, Except Street Name Signs	1	LS
26	Signing, Street Name Signs Only	1	LS
27	Traffic Signalization	1	LS
28	Traffic Control	1	LS
	Measured Quantity Bid Items - Paving		
29	Field Office and Laboratory (Type A)	1	ea
30	Sidewalk, Drive &/or Pkg Lot Removed	608	sy
31	Excavation, Special	85	cy
32	AC Pavement, 7" (5" Bit. Base)	21,062	sy
33	Concrete Approach 12", Bridge	155	sy
34	Bridge Approach Slab Footing	63	cy
35	Concrete Pavement 12" (Reinf.)	359	sy
36	Concrete Pavement 15" (Reinf.)	611	sy
37	Concrete Pavement (VG) 8" Reinf.	2,211	sy
38	Concrete Driveway 8" (Reinf.)	4,386	sf
39	AC Pavement 5"	72	sy
40	Concrete Sidewalk 4"	43,667	sf
41	Concrete Sidewalk 5" (Reinf.)	600	sf
42	Sidewalk Thickening	489	lf
43	Wheelchair Ramp w/ Detectable Warnings	22	ea
44	Brick Pavers	56	sy
45	Concrete Base 8" (Reinf.)	72	sy
46	Concrete C&G, Type 1 (6" & 1-1/2")	9,488	lf
47	Concrete C&G, Type 3 (8")	3,691	lf
48	Concrete Curb, Mono Edge (6" & 1-1/2")	916	lf
49	Concrete Curb, Mono Edge (8")	106	lf
50	Concrete Protection Curb	150	lf
51	Concrete Protection Curb, Special	28	lf
52	Concrete Ramp Nose Section	20	ea
53	Concrete Flume	22	lf
54	Retaining Wall, Cast-In-Place	700	lf
55	Concrete Safety Barrier	685	lf
56	Concrete Safety Barrier, Special	163	lf
57	Handrail, Pedestrian	11	lf
58	Handrail, Bicycle	662	lf
59	Asphalt Hook-up	312	sy

RECAPITULATION OF QUANTITIES			
LINE NO.	BID ITEM DESCRIPTION	QUANTITY	UNIT
60	Rip-Rap, Light Stone	1,220	sy
61	Turf Reinforcement Mat	3,194	sy
62	Pipe, PVC 4"	615	lf
63	Inlet Removed	4	ea
64	Manhole Removed	1	ea
65	Pipe Removed	1,953	lf
66	Inlet plug	1	ea
67	Pipe Plug	1	ea
68	Mailbox Removed and Reset	3	ea
69	MH Adjusted	5	ea
70	MH Adjusted, Special	2	ea
71	MH, Reconstructed	1	ea
	Measured Quantity Bid Items - Drainage		
72	Pipe, SWS 15" RCP	239	lf
73	Pipe, SWS 18" RCP	604	lf
74	Pipe, SWS 24" RCP	1,022	lf
75	Pipe, SWS 30" RCP	1,211	lf
76	Pipe, SWS 36" RCP	689	lf
77	Pipe, SWS 42" RCP	841	lf
78	Pipe, SWS 48" RCP	160	lf
79	Pipe, SWS, HERCP (34" x 53"){42}	51	lf
80	Pipe, SWS, HERCP (38" x 60"){48}	104	lf
81	Pipe, SWS, HERCP (43" x 68"){54}	189	lf
82	Pipe, SWS, RCBC (5' x 4')	123	lf
83	Pipe, SWS, RCBC (7' x 4')	81	lf
84	Sand Backfill, Flushed and Vibrated	4,054	lf
85	Inlet, Curb (Type 1)(L=10' W=3')	8	ea
86	Inlet, Curb (Type 1)(L=10' W=4')	8	ea
87	Inlet, Curb (Type 1)(L=10' W=5')	4	ea
88	Inlet, Curb (Type 1)(L=10' W=7')	1	ea
89	Inlet, Curb (Type 1)(L=15' W=4')	3	ea
90	Inlet, Curb (Type 1)(L=15' W=6')	1	ea
91	Inlet, Curb (Type 1)(L=15' W=7')	1	ea
92	Inlet, Curb (Type 1A)(L=10' W=3')	2	ea
93	Inlet, Curb (Type 1A)(L=10' W=4')	1	ea
94	Inlet, Curb (Type 1A)(L=10' W=6')	1	ea
95	Inlet, Curb (Type 2)(L=6' 2-1/2" W=3' 4-3/8")	4	ea
96	Inlet, Drop (Single)	5	ea
97	Inlet, Drop (Double)	1	ea
98	MH, Standard SWS (5')	4	ea
99	MH, Shallow SWS (4')	2	ea
100	MH, Shallow SWS (6')	2	ea
101	MH Stack (4')	1	ea
102	MH, Reinforced Concrete (6' x 3')	2	ea
103	MH, Reinforced Concrete (6' x 4')	1	ea
104	MH, Reinforced Concrete (6' x 6')	2	ea
105	MH, Reinforced Concrete (10' x 7')	1	ea
106	Pipe, SWS, PVC 4", Perforated	691	lf
107	Inlet Hook-up	36	ea
	Measured Quantity Bid Items - Bridge		
108	Multi-Layer Polymer Overlay	645	sy
109	Piles (Steel)(HP12x53)	189	lf
110	Piles (Steel)(HP12x74)	208	lf
111	Contractor Furnished PDA	2	ea
112	Handrail, Pedestrian	100	lf
113	Handrail, Bicycle	200	lf
114	Rip-Rap, Reinforced Concrete	208	sy
115	Bridge Plaque (Non-participating)	1	ea
	Measured Quantity Bid items - Erosion Control BMP		
116	BMP, Back of Curb Protection	13,132	lf
117	BMP, Curb Inlet Protection	35	ea
118	BMP, Drop Inlet Protection	9	ea
119	BMP, Silt Fence	1,808	lf
120	BMP, Construction Entrance	8	ea

RECAPITULATION OF QUANTITIES			
LINE NO.	BID ITEM DESCRIPTION	QUANTITY	UNIT
	Measured Quantity Bid Items - Landscaping		
121	Tree, Chinese Pistache, 3" Cal., B&B	34	ea
122	Tree, Shantung Maple, 2.5" Cal. B&B	31	ea
123	Tree, Prairie Fire Crabapple, 2" Cal. B&B	19	ea
124	Tree, Hot Wings Tatarian Maple, 2.5" Cal. B&B	24	ea
125	Large Tree Removal	62	ea
126	Small Tree Removal	15	ea
	Measured Quantity Bid items - Traffic		
127	AC Pavement 6", Temporary (Phase Shift)	366	sy
128	Concrete Safety Barrier, Temporary	1,155	lf
129	Portable Changeable Electronic Message Sign	200	days
	Measured Quantity Bid items - Water (Non-Participating)		
130	Pipe, DICL 6"	23	lf
131	Pipe, DICL 8"	63	lf
132	Pipe, DICL 16"	113	lf
133	Pipe, WL 6"	20	lf
134	Pipe, WL 8"	88	lf
135	Pipe, WL 16"	625	lf
136	Pipe, WL 16", Trenchless	458	lf
137	Valve Assembly, 8"	2	ea
138	Valve Assembly, 16"	3	ea
139	Fire Hydrant Assembly	2	ea
140	Fire Hydrant	1	ea
141	Fire Hydrant Removal	3	ea
142	Cut and Cap	2	ea
143	Valve Box Adjusted	21	ea
144	Valve Box Removed	6	ea
145	Water Meter Relocated	11	ea
146	Water Meter Adjusted	2	ea
147	AC Pavement 6", Temporary (Utility Patch)	150	sy

For Utility Adjustments see the Paving Plan sheets 5-20.
For Storm Sewer Summary of Quantities see sheet 21.
For Concrete Retaining Wall Quantities see sheet 80.
For Bridge Quantities see sheet 81.
For Erosion Control Quantities see sheet 116.
For Roadside Improvements Quantities see sheet 124.
For Pavement Marking Quantities see sheet 131.
For Signing Quantities see sheet 133.

MKEC
Wichita, KS • 316-684-9600

STREET IMPROVEMENTS FOR

127TH STREET EAST

FROM 13TH STREET NORTH TO 21ST STREET NORTH

©2017
MKEC Engineering
All Rights Reserved
www.mkec.com
These drawings and their contents, including, but not limited to, all concepts, designs, & ideas are the exclusive property of MKEC Engineering (MKEC), and may not be used or reproduced in any way without the express consent of MKEC.

RECAPITULATION OF QUANTITIES

PROJECT NO.	472-85158
DATE	11/29/17
SCALE	NTS

DESIGNED	DRAWN	CHECKED
JRA	LES	JRA

NO.	REVISION	DATE

SHEET NO.

113 OF 183

J:\PROJECTS\2014\140104\299 - COW_127TH E 13TH TO 21ST\05-CIVIL\CAD\QUANTITIES\1429DEQ03.DWG

PLOTTED: Wednesday, November 29, 2017 @ 03:20PM

STATE	PROJECT NO.	YEAR	SHEET NO.	TOTAL SHEETS
KANSAS	87 N-0615-01	2017	114	183

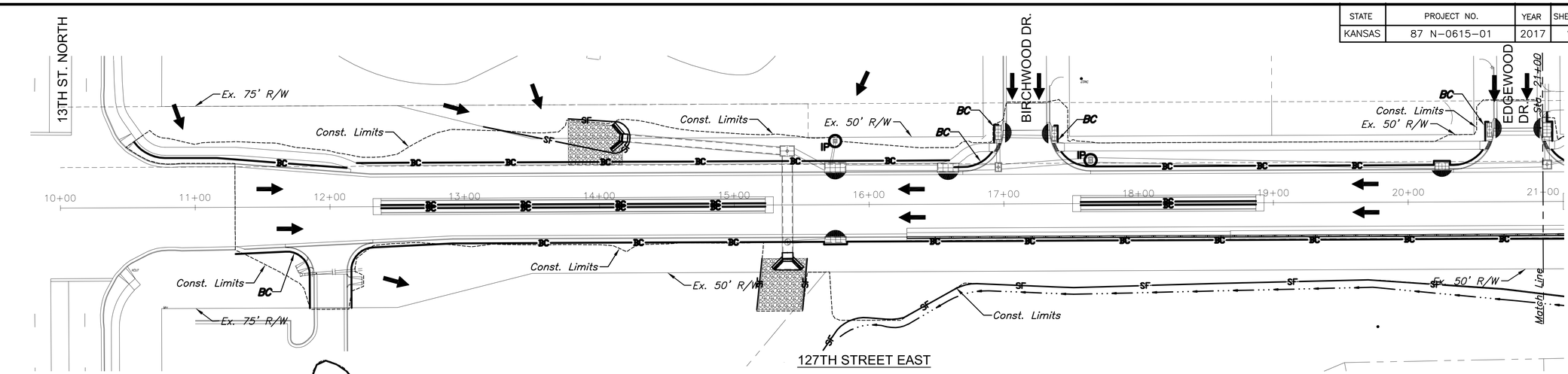

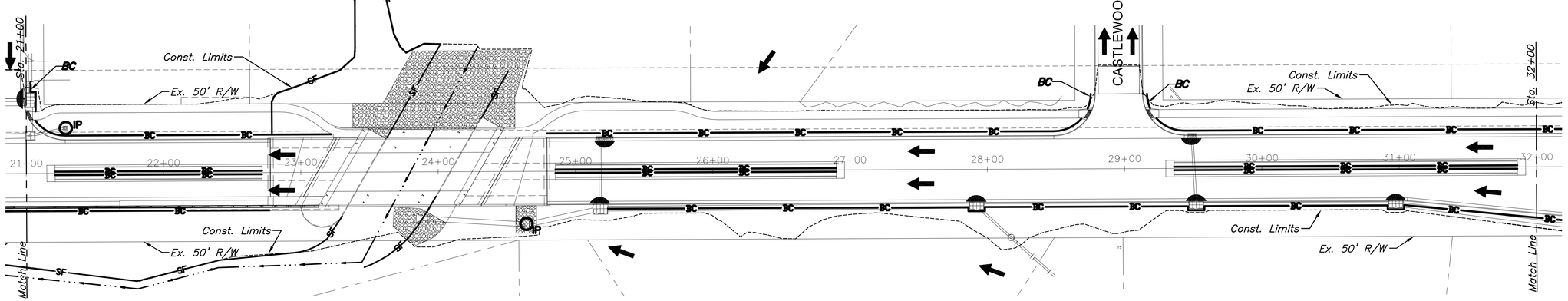

SCALE: 1"=40'
0 20 40 80

EROSION CONTROL NOTES

THIS PROJECT WILL NOT DISTURB MORE THAN 6 ACRES AT A TIME.

REFER TO CITY OF WICHITA STANDARDS FOR BMP INSTALLATION, INSPECTION AND MAINTENANCE DETAILS AND SPECIFICATIONS.

COST FOR EACH EROSION AND SEDIMENT CONTROL ITEM SHALL INCLUDE MAINTENANCE, INSPECTION AND EVENTUAL REMOVAL. BESIDES KEEPING EACH DEVICE IN WORKING ORDER, MAINTENANCE SHALL INCLUDE, AT A MINIMUM, SEDIMENT REMOVAL BEFORE 50% OF THE DEVICE'S CAPACITY IS REACHED.

CONTRACTOR SHALL ADJUST EROSION AND SEDIMENT CONTROL PLANS TO CONFORM TO ACTUAL CONSTRUCTION OPERATIONS. ALL CHANGES TO PLAN SHALL BE APPROVED BY THE CITY.

STABILIZED ENTRANCES SHALL BE PROVIDED AS DIRECTED BY THE CITY. 8 TOTAL ENTRANCES ARE ANTICIPATED ON THE PROJECT.

STOCKPILING OF EXCAVATED MATERIAL ON THE PROJECT SITE IS GENERALLY PROHIBITED. SMALL AND INTERIM STOCK PILES NOT IMMEDIATELY HAULED OFF-SITE SHOULD BE ENCLOSED AND PROTECTED WITH SILT BARRIER AROUND THE ENTIRE CIRCUMFERANCE OF THE STOCK PILE. INSTALLING AND MAINTAINING THIS FENCE SHALL BE CONSIDERED SUBSIDIARY TO THE BID ITEM "BMP, SILT FENCE"

EROSION CONTROL DEVICES WILL NEED TO BE INSTALLED AS APPLICABLE FOR THE APPROPRIATE CONSTRUCTION PHASE. CONTRACTOR SHALL ADJUST EROSION AND SEDIMENT CONTROL PLAN TO CONFORM TO ACTUAL CONSTRUCTION OPERATIONS. ONCE INSTALLED, THE DEVICES SHALL REMAIN IN-PLACE AND CONTINUE TO BE MAINTAINED UNTIL NO LONGER NECESSARY AS DETERMINED BY THE CITY.

ALL AREAS DISTURBED BY CONSTRUCTION THAT ARE ADJACENT TO DEVELOPED PROPERTIES SHALL BE RESTORED WITH SOD TO MATCH EXISTING TURF TYPE. RESTORATION OF DISTURBED AREAS SHALL INCLUDE BUT NOT BE LIMITED TO, TOP SOIL PREPARATION AND SODDING. ALL SODDING WORK SHALL BE IN ACCORDANCE WITH CITY STANDARD SPECIFICATIONS AND THE CITY ADMINISTRATIVE REGULATION NO. AR6.5, WHICH GOVERNS CLEANUP AND RESTORATION OR REPLACEMENT FOLLOWING CONSTRUCTION. THE "RECAPITULATION OF QUANTITIES" SHOWS THE ESTIMATED SQUARE YARDS OF SODDING, WITH A BID ITEM FOR THE SAME. WHEN THE WEATHER/SEASON PREVENTS THE INSTALLATION OF SOD, THE CONTRACTOR SHALL BE RESPONSIBLE FOR INSTALLING EROSION CONTROL BLANKET (CURLEX I, OR APPROVED EQUAL) AT THE BACK OF CURB (8" WIDE MINIMUM). ALL COST FOR EROSION MAT INSTALLATION SHALL BE SUBSIDIARY TO "SITE RESTORATION".

THE CONTRACTOR SHALL RESEED ALL UNDEVELOPED AREAS DISTURBED BY CONSTRUCTION WITH A MIXTURE OF RYEGRASS (APPLIED AT A RATE OF 200 LBS. PER ACRE) AND BUFFALO GRASS, DEPENDING ON THE SOIL CONDITIONS (APPLIED AT A RATE OF 200 LBS. PER ACRE) AND BUFFALO GRASS, DEPENDING ON THE SOIL CONDITIONS (APPLIED PER STANDARD SPECIFICATIONS). PURE NITROGEN FERTILIZER SHALL ALSO BE APPLIED AT A RATE OF 1.5 LBS. PER THOUSAND SQUARE FEET. THE SEED SHALL BE WATERED WITH A DEEP SOAKING EVERY TWO (2) WEEKS DURING DRY PERIODS UNTIL A MATURE STAND OF GRASS IS OBTAINED. THE "RECAPITULATION OF QUANTITIES" SHOWS THE ESTIMATED SQUARE YARDS OF DISTURBED AREA TO BE SEEDED, WITH A BID ITEM FOR THE SAME. THE PERMANENT SEEDING MAY BE OMITTED ONLY IF SODDING IS REQUIRED. THE CONTRACTOR SHALL BE RESPONSIBLE FOR INSTALLING EROSION CONTROL BLANKET (CURLEX I, OR APPROVED EQUAL) AT THE BACK OF CURB, TO AND INCLUDING THE LIMITS OF ALL SEEDED AREAS. ALL COSTS FOR THIS WORK SHALL BE SUBSIDIARY TO THE SEEDING BID ITEMS.

LEGEND

- FLOW ARROW
- SF — SILT FENCE
- STREAM FLOW
- BC — BACK OF CURB PROTECTION
- CURB INLET PROTECTION
- IP — DROP INLET PROTECTION
- RIPRAP

MKEC
Wichita, KS • 316-684-9600

STREET IMPROVEMENTS FOR

127TH STREET EAST

FROM 13TH STREET NORTH TO 21ST STREET NORTH

©2017
MKEC Engineering
All Rights Reserved
www.mkec.com
These drawings and their contents, including, but not limited to, all concepts, designs, & ideas are the exclusive property of MKEC Engineering (MKEC), and may not be used or reproduced in any way without the express consent of MKEC.

EROSION CONTROL PLAN (1)

PROJECT NO.	472-85158
DATE	11/29/17
SCALE	AS SHOWN

DESIGNED	DRAWN	CHECKED
LES	LES	JRA

NO.	REVISION	DATE

SHEET NO.

114 OF 183

Sh. No. 114

J:\PROJECTS\2014\1401040260 - COW_ 127TH E 13TH TO 21ST\05-CIVIL\CAD\GRD\14260FP01.DWG

PLOTTED: Wednesday, November 29, 2017 @ 03:21PM

STATE	PROJECT NO.	YEAR	SHEET NO.	TOTAL SHEETS
KANSAS	87 N-0615-01	2017	115	183

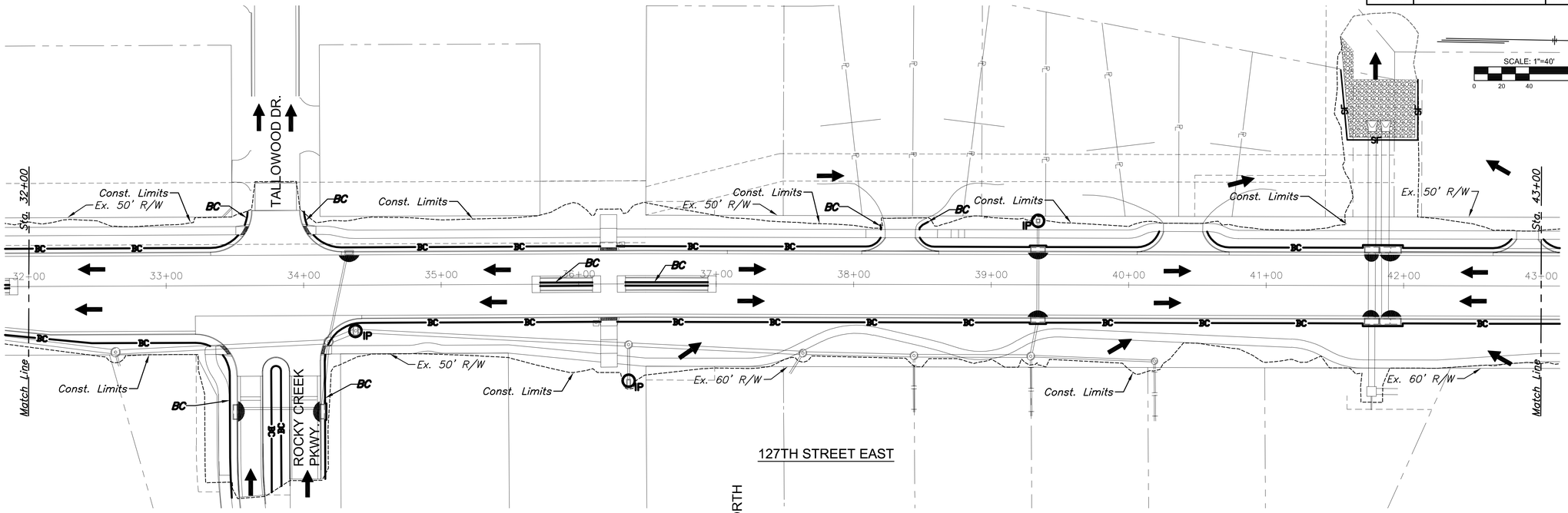

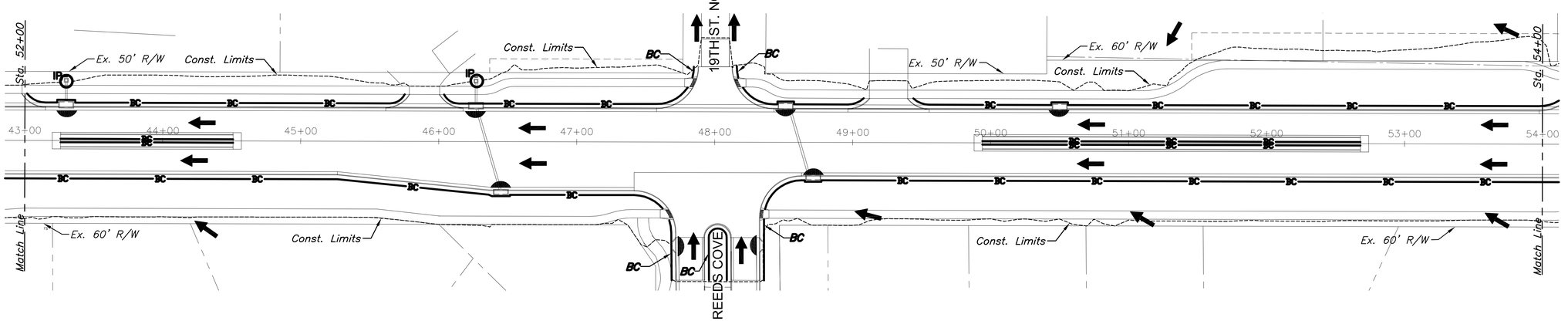

LEGEND

- FLOW ARROW
- SF — SILT FENCE
- STREAM FLOW
- BC — BACK OF CURB PROTECTION
- CURB INLET PROTECTION
- IP — DROP INLET PROTECTION
- RIPRAP

MKEC
Wichita, KS • 316-684-9600

STREET IMPROVEMENTS FOR

127TH STREET EAST

FROM 13TH STREET NORTH TO 21ST STREET NORTH

©2017
MKEC Engineering
All Rights Reserved
www.mkec.com
These drawings and their contents, including, but not limited to, all concepts, designs, & ideas are the exclusive property of MKEC Engineering (MKEC), and may not be used or reproduced in any way without the express consent of MKEC.

EROSION CONTROL PLAN (2)

PROJECT NO.	472-85158
DATE	11/29/17
SCALE	AS SHOWN

DESIGNED	DRAWN	CHECKED
LES	LES	JRA

NO.	REVISION	DATE

SHEET NO.

115 OF 183

Sh. No. 115

J:\PROJECTS\2014\1401040260 - COW_-127TH E -13TH TO 21ST\05-CIVIL\CAD\GRD\14260PH02.DWG

PLOTTED: Wednesday, November 29, 2017 @ 03:22PM

STATE	PROJECT NO.	YEAR	SHEET NO.	TOTAL SHEETS
KANSAS	87 N-0615-01	2017	116	183

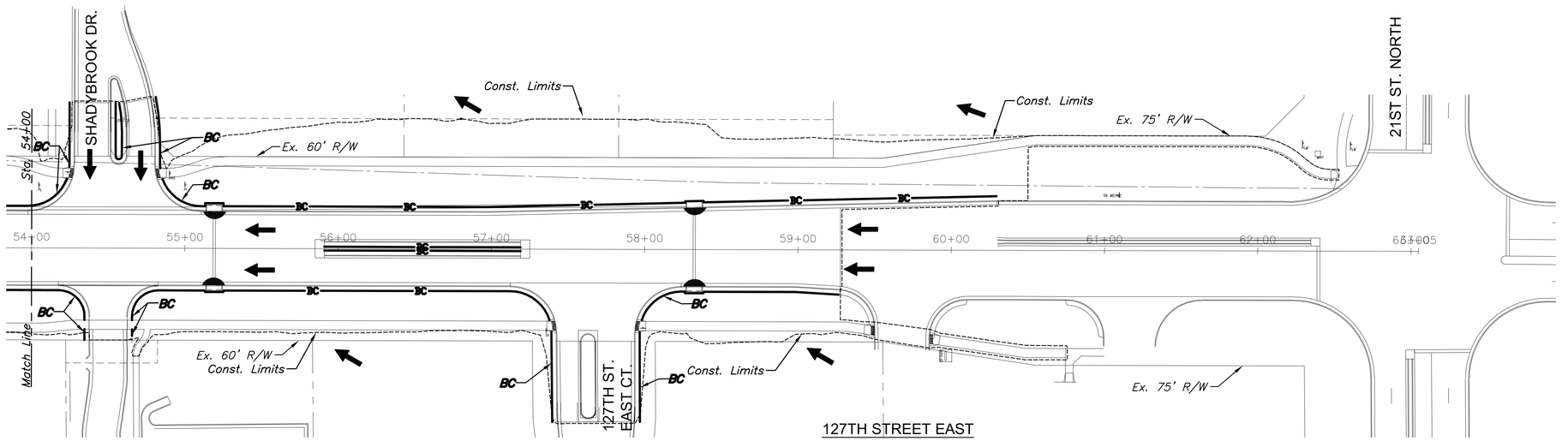

SCALE: 1"=40'
0 20 40 80

EROSION CONTROL BMP SUMMARY

ITEMS	QUANTITY	UNIT
BMP, Back of Curb Protection	13,132	L.F.
BMP, Curb Inlet Protection	35	Each
BMP, Drop Inlet Protection	9	Each
BMP, Silt Fence	1,808	L.F.
BMP, Construction Entrance	8	Each

LEGEND

- FLOW ARROW
- SF — SILT FENCE
- STREAM FLOW
- BC — BACK OF CURB PROTECTION
- CURB INLET PROTECTION
- DROP INLET PROTECTION
- RIPRAP

MKEC
Wichita, KS • 316-684-9600

STREET IMPROVEMENTS FOR

127TH STREET EAST

FROM 13TH STREET NORTH TO 21ST STREET NORTH

©2017
MKEC Engineering
All Rights Reserved
www.mkec.com
These drawings and their contents, including, but not limited to, all concepts, designs, & ideas are the exclusive property of MKEC Engineering (MKEC), and may not be used or reproduced in any way without the express consent of MKEC.

EROSION CONTROL PLAN (3)

PROJECT NO.	472-85158
DATE	11/29/17
SCALE	AS SHOWN

DESIGNED	DRAWN	CHECKED
LES	LES	JRA

NO.	REVISION	DATE

SHEET NO.

116 OF 183

J:\PROJECTS\2014\140104260 - COV_-127TH E 13TH TO 21ST\05-CIVIL\CAD\GRD\14260PR03.DWG

PLOTTED: Wednesday, November 29, 2017 @ 03:22PM

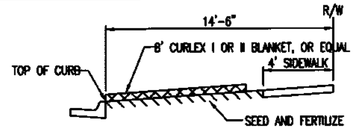

SECTION B-B

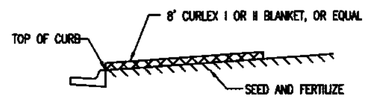

SECTION A-A

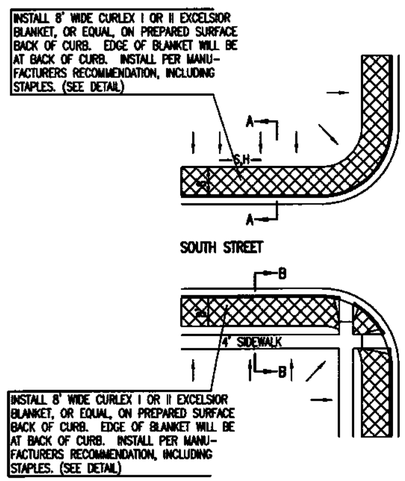

GENERAL NOTES

1. EXCELSIOR MAT TO BE INSTALLED WHEN SOD IS NOT SPECIFIED ON PROJECT.
2. EXCELSIOR BLANKET TO BE INSTALLED OVER SEED AND FERTILIZER, AS SPECIFIED IN THE PROJECT SPECIFICATIONS.
3. AFTER INSTALLATION OF EXCELSIOR BLANKET, AT LOCATIONS WHERE CONCENTRATED FLOW CARRIES SEDIMENT OVER THE CURB AND INTO THE GUTTER, SUPPLEMENTAL EROSION CONTROL DEVICES WILL BE INSTALLED BY THE CONTRACTOR AS NEEDED, TO FIX THE PROBLEM.

BACK OF CURB PROTECTION DETAIL

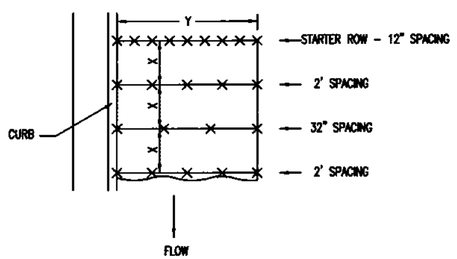

STAPLE PATTERN

NOTES: USE 6" SEAM OVERLAP
(X & Y = RECOMMENDED BY MANUFACTURE)

DETAILS FOR APPROVED EROSION CONTROL MAT

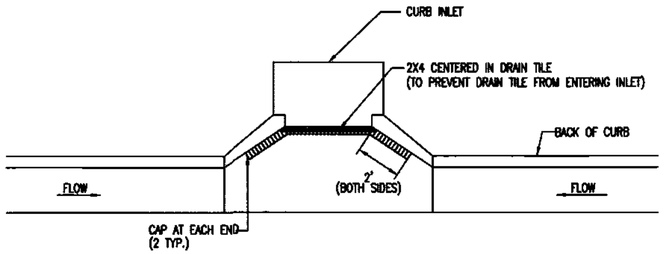

NOTE:
PLACE 4" PERFORATED PVC PIPE, FILLED WITH 1/2"-1" DIA. GRAVEL, IN FRONT OF CURB INLET AS SHOWN.

2X4 LENGTH	INLET TYPE	INLET OPENING
5'-6"	1-A	5'-0"
10'-6"	1-A	10'-0"
15'-6"	1-A	15'-0"

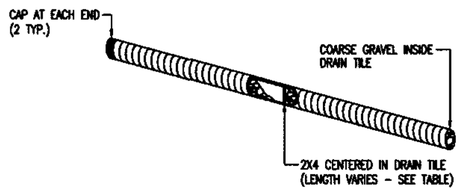

CURB INLET PROTECTION
4" PERFORATED PIPE W/ GRAVEL



SECTION C-C

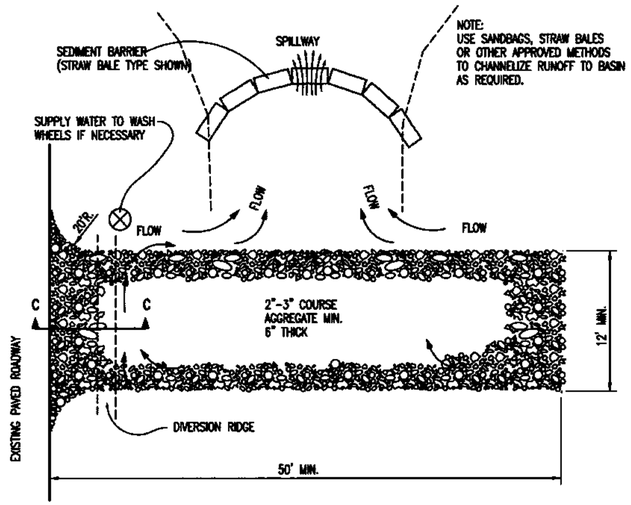

STABILIZED CONSTRUCTION ENTRANCE

GENERAL NOTES

1. THE ENTRANCE SHALL BE MAINTAINED IN A CONDITION THAT WILL PREVENT TRACKING OR FLOWING OF SEDIMENT ONTO PUBLIC RIGHTS-OF-WAY. THIS MAY REQUIRE TOP DRESSING, REPAIR AND/OR CLEANOUT OF ANY MEASURES USED TO TRAP SEDIMENT.
2. WHEN NECESSARY, WHEELS SHALL BE CLEANED PRIOR TO ENTRANCE ONTO PUBLIC RIGHT-OF-WAY.
3. WHEN WASHING IS REQUIRED, IT SHALL BE DONE ON AN AREA STABILIZED WITH CRUSHED STONE THAT DRAINS INTO AN APPROVED SEDIMENT TRAP OR SEDIMENT BASIN, AS SHOWN ABOVE.
4. DRIVE ENTRANCES ONTO RESIDENTIAL LOTS WILL NOT BE REQUIRED TO HAVE THE SEDIMENT BARRIER SHOWN, BUT WHEEL WASHING MAY BE REQUIRED IF STABILIZED ENTRANCE IS NOT SUFFICIENT TO KEEP MUD FROM BEING TRACKED ONTO ADJACENT STREET. ENTRANCE SHALL EXTEND FROM BACK OF CURB TO DWELLING.

REVISION DATE: MAY 2013

GARY L. JANZEN — KANSAS — PROFESSIONAL ENGINEER
05/31/13

CITY OF WICHITA
PUBLIC WORKS & UTILITIES ENGINEERING DIVISION

BACK OF CURB PROTECTION, CURB INLET PROTECTION AND CONSTRUCTION ENTRANCE

CITY ENGINEER
GARY JANZEN, P.E.

PROJECT NUMBER	OCA NUMBER	DATE
472-85158	707065	

CITY ENGINEER'S OFFICE
CITY HALL - SEVENTH FLOOR
455 NORTH MAIN STREET
WICHITA, KANSAS 67202-1620
(316) 268-4501

SHEET
117 OF 183

SW-501
Sh. No. 117

J:\PROJECTS\2014\1401040299 - COW_127TH E 13TH TO 21ST\05-CIVIL\CAD\EROSION\1429SW-501.DWG

PLOTTED: Wednesday, November 29, 2017 @ 03:22PM

NOTE: POINT A MUST BE HIGHER THAN POINT B SO THAT WATER FLOWS OVER THE SILT FENCE FABRIC AND NOT AROUND IT.

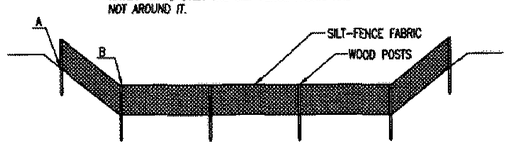

ELEVATION

SILT FENCE DITCH CHECKS
(STREAM PROTECTION)

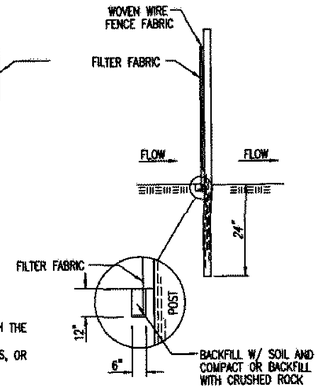

ANCHOR TRENCH DETAIL

MATERIAL SPECIFICATION:

SILT FENCE FABRIC SHOULD CONFORM TO THE AASHTO M288 96 SILT FENCE SPECIFICATION.
THE POSTS USED TO SUPPORT THE SILT FENCE FABRIC SHOULD BE A HARDWOOD MATERIAL WITH THE FOLLOWING MINIMUM DIMENSIONS: 2" SQUARE (NOMINAL) BY 4' LONG.
SILT FENCE FABRIC SHOULD BE ATTACHED TO THE WOODEN POSTS WITH STAPLES, WIRE, ZIP TIES, OR NAILS.

PLACEMENT:

PLACE SILT FENCE IN DITCHES WHERE IT IS UNLIKELY THAT IT WILL BE OVERTOPPED.
WATER SHOULD FLOW THROUGH A SILT FENCE DITCH CHECK, NOT OVER IT. SILT FENCE DITCH CHECKS OFTEN FAIL WHEN OVERTOPPED.
SILT FENCE DITCH CHECKS SHOULD BE PLACED PERPENDICULAR TO THE FLOWLINE OF THE DITCH.
THE SILT FENCE SHOULD EXTEND FAR ENOUGH SO THAT THE GROUND LEVEL AT THE ENDS OF THE FENCE IS HIGHER THAN THE TOP OF THE LOW POINT OF THE FENCE. THIS PREVENTS WATER FROM FLOWING AROUND THE CHECK.
SILT FENCE DITCH CHECKS SHOULD NOT BE PLACED IN DITCHES WHERE HIGH FLOWS ARE EXPECTED. ROCK CHECKS SHOULD BE USED INSTEAD.
SILT FENCE SHOULD BE PLACED IN DITCHES WITH SLOPES OF 6% OR LESS. FOR SLOPES STEEPER THAN 6%, ROCK CHECKS SHOULD BE USED.

THE FOLLOWING TABLE PROVIDES CHECK SPACING FOR A GIVEN DITCH GRADE:

DITCH GRADE (%)	DITCH CHECK SPACING (FEET)
0.5	200
1.0	200
2.0	100
3.0	65
4.0	50
5.0	40
6.0	30

PROPER INSTALLATION METHOD:

EXCAVATE A TRENCH PERPENDICULAR TO THE DITCH FLOWLINE THAT IS AT LEAST 12" DEEP BY 6" WIDE.
EXTEND THE TRENCH IN A STRAIGHT LINE ALONG THE ENTIRE LENGTH OF THE PROPOSED DITCH CHECK.
PLACE THE SOIL ON THE UPSTREAM SIDE OF THE TRENCH FOR LATER USE.
ROLL OUT A CONTINUOUS LENGTH OF SILT FENCE FABRIC ON THE DOWNSTREAM SIDE OF THE TRENCH.
PLACE THE EDGE OF THE FABRIC IN THE TRENCH STARTING AT THE TOP UPSTREAM EDGE OF THE TRENCH.
LINE TWO SIDES OF THE TRENCH WITH THE FABRIC AS SHOWN ON DETAIL. BACKFILL OVER THE FABRIC IN THE TRENCH WITH THE EXCAVATED SOIL AND COMPACT. AFTER FILLING THE TRENCH, APPROXIMATELY 24" TO 36" OF SILT FENCE FABRIC SHOULD REMAIN EXPOSED.
LAY THE EXPOSED SILT FENCE ON THE UPSTREAM SIDE OF THE TRENCH TO CLEAR AN AREA FOR DRIVING IN THE POSTS. JUST DOWNSTREAM OF THE TRENCH, DRIVE POSTS INTO THE GROUND TO A DEPTH OF AT LEAST 24". PLACE POSTS NO MORE THAN 4' APART.
ATTACH THE SILT FENCE TO THE ANCHORED POST WITH STAPLES, WIRE, ZIP TIES, OR NAILS.

LIST OF COMMON PLACEMENT/INSTALLATION MISTAKES TO AVOID:

WATER SHOULD FLOW THROUGH A SILT FENCE DITCH CHECK-NOT OVER IT. PLACE SILT FENCE IN DITCHES WHERE IT IS UNLIKELY THAT IT WILL BE OVERTOPPED. SILT FENCE INSTALLATIONS QUICKLY DETERIORATE WHEN WATER OVERTOPS THEM.
DO NOT PLACE SILT FENCE POSTS ON THE UPSTREAM SIDE OF THE SILT FENCE FABRIC. IN THIS CONFIGURATION, THE FORCE OF THE WATER IS NOT RESTRICTED BY THE POSTS, BUT ONLY BY THE STAPLES (WIRE, ZIP TIES, NAILS, ETC.). THE SILT FENCE WILL RIP AND FAIL.
DO NOT PLACE A SILT FENCE DITCH CHECK DIRECTLY IN FRONT OF A CULVERT OUTLET. IT WILL NOT STAND UP TO THE CONCENTRATED FLOW.
DO NOT PLACE SILT FENCE DITCH CHECKS IN DITCHES THAT WILL LIKELY EXPERIENCE HIGH FLOWS. THEY WILL NOT STAND UP TO CONCENTRATED FLOW.
FOLLOW PRESCRIBED DITCH CHECK SPACING GUIDELINES. IF SPACING GUIDELINES ARE EXCEEDED, EROSION WILL OCCUR BETWEEN THE DITCH CHECKS.
DO NOT ALLOW WATER TO FLOW AROUND THE DITCH CHECK. MAKE SURE THAT THE DITCH CHECK IS LONG ENOUGH SO THAT THE GROUND LEVEL AT THE ENDS OF THE FENCE IS HIGHER THAN THE LOW POINT ON THE TOP OF THE FENCE.
DO NOT PLACE SILT FENCE DITCH CHECKS IN CHANNELS WITH SHALLOW SOILS UNDERLAIN BY ROCK. IF THE CHECK IS NOT ANCHORED SUFFICIENTLY, IT WILL WASH OUT.

INSPECTION AND MAINTENANCE:

SILT FENCE DITCH CHECKS SHOULD BE INSPECTED EVERY 7 DAYS AND WITHIN 24 HOURS OF A RAINFALL OF 1/2" OR MORE. THE FOLLOWING IS A LIST OF QUESTIONS THAT SHOULD BE ADDRESSED DURING EACH INSPECTION:

DOES WATER FLOW AROUND THE DITCH CHECK?
DOES WATER FLOW UNDER THE DITCH CHECK?
DOES THE SILT FENCE SAG EXCESSIVELY?
HAS THE SILT FENCE TORN OR BECOME DETACHED FROM THE POSTS?
DOES SEDIMENT NEED TO BE REMOVED FROM BEHIND THE DITCH CHECK?

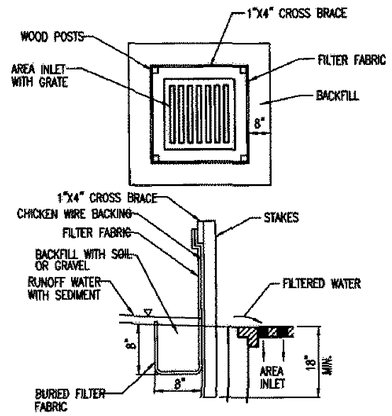

SILT FENCE BARRIERS FOR AREA INLETS
(INLET PROTECTION)

MATERIAL SPECIFICATION:

SILT FENCE FABRIC SHOULD CONFORM TO THE AASHTO M288 96 SILT FENCE SPECIFICATION.
THE WIRE OR POLYMERIC MESH BACKING USED TO HELP SUPPORT THE SILT FENCE FABRIC SHOULD CONFORM TO THE AASHTO M288 96 SILT FENCE SPECIFICATION.
THE POSTS USED TO SUPPORT THE SILT FENCE FABRIC SHOULD BE A HARDWOOD MATERIAL WITH THE FOLLOWING MINIMUM DIMENSIONS: 2" SQUARE (NOMINAL) BY 4' LONG.
THE MATERIAL USED TO FRAME THE TOPS OF THE POSTS SHOULD BE 1" BY 4" BOARDS.
SILT FENCE FABRIC AND SUPPORT BACKING SHOULD BE ATTACHED TO THE WOODEN POSTS AND FRAME WITH STAPLES, WIRE, ZIP TIES, OR NAILS.

PLACEMENT:

PLACE A SILT FENCE DROP INLET BARRIER IN A LOCATION WHERE IT IS UNLIKELY TO BE OVERTOPPED.
WATER SHOULD FLOW THROUGH SILT FENCE, NOT OVER IT. SILT FENCE BARRIERS FOR AREA INLETS OFTEN FAIL WHEN REPEATEDLY OVERTOPPED.
WHEN USED AS A BARRIER FOR AREA INLETS, SILT FENCE FABRIC AND POSTS MUST BE SUPPORTED AT THE TOP BY A WOODEN FRAME.
WHEN A SILT FENCE BARRIER FOR AREA INLETS IS LOCATED NEAR AN INLET THAT HAS STEEP APPROACH SLOPES, THE STORAGE CAPACITY BEHIND THE BARRIER IS DRASTICALLY REDUCED. TIMELY REMOVAL OF SEDIMENT MUST OCCUR FOR A BARRIER TO OPERATE PROPERLY IN THIS LOCATION.

PROPER INSTALLATION METHOD:

EXCAVATE A TRENCH AROUND THE PERIMETER OF THE AREA INLET THAT IS AT LEAST 8" DEEP BY 8" WIDE.
DRIVE POSTS TO A DEPTH OF AT LEAST 18" AROUND THE PERIMETER OF THE AREA INLET.
THE DISTANCE BETWEEN POSTS SHOULD BE 4' OR LESS. IF THE DISTANCE BETWEEN TWO ADJACENT CORNER POSTS IS MORE THAN 4', ADD ANOTHER POST(S) BETWEEN THEM.
CONNECT THE TOPS OF ALL THE POSTS WITH A WOODEN FRAME MADE OF 1" BY 4" BOARDS. USE NAILS OR SCREWS FOR FASTENING.
ATTACH THE WIRE OR POLYMERIC-MESH BACKING TO THE OUTSIDE OF THE POST/FRAME STRUCTURE WITH STAPLES, WIRE, ZIP TIES, OR NAILS.
ROLL OUT A CONTINUOUS LENGTH OF SILT FENCE FABRIC LONG ENOUGH TO WRAP AROUND THE PERIMETER OF THE AREA INLET. ADD MORE LENGTH FOR OVERLAPPING THE FABRIC JOINT. PLACE THE EDGE OF THE FABRIC IN THE TRENCH, STARTING AT THE OUTSIDE EDGE OF THE TRENCH. LINE ALL THREE SIDES OF THE TRENCH WITH THE FABRIC. BACKFILL OVER *THE FABRIC IN THE TRENCH WITH THE EXCAVATED SOIL* AND COMPACT. AFTER FILLING THE TRENCH, APPROXIMATELY 24" TO 36" OF SILT FENCE FABRIC SHOULD REMAIN EXPOSED.
ATTACH THE SILT FENCE TO THE OUTSIDE OF THE POST/FRAME STRUCTURE WITH STAPLES, WIRE, ZIP TIES, OR NAILS. THE JOINT SHOULD BE OVERLAPPED TO THE NEXT POST.

NOTE: WHEN A SILT FENCE BARRIER FOR AREA INLET IS PLACED IN A SHALLOW MEDIAN DITCH, MAKE SURE THAT THE TOP OF THE BARRIER IS NOT HIGHER THAN THE PAVED ROAD. IN THIS CONFIGURATION, WATER MAY SPREAD ONTO THE ROADWAY CAUSING A HAZARDOUS CONDITION.

LIST OF COMMON PLACEMENT/INSTALLATION MISTAKES TO AVOID:

WATER SHOULD FLOW THROUGH A SILT FENCE BARRIER FOR AREA INLET-NOT OVER IT. PLACE A SILT FENCE BARRIER FOR AREA INLET IN A LOCATION WHERE IT IS UNLIKELY TO BE OVERTOPPED. SILT FENCE *BARRIER FOR AREA INLETS OFTEN FAIL WHEN REPEATEDLY OVERTOPPED.*
DO NOT PLACE POSTS ON THE OUTSIDE OF THE SILT FENCE BARRIER FOR AREA INLET. IN THIS CONFIGURATION, THE FORCE OF THE WATER IS NOT RESISTED BY THE POSTS, BUT ONLY BY THE STAPLES (WIRE, ZIP TIES, NAILS, ETC.). THE SILT FENCE WILL RIP AND FAIL.
DO NOT INSTALL SILT FENCE BARRIER FOR AREA INLETS WITHOUT FRAMING THE TOP OF THE POSTS. THE CORNER POSTS AROUND AREA INLETS ARE STRESSED IN TWO DIRECTIONS WHEREAS A NORMAL SILT FENCE IS ONLY STRESSED IN ONE DIRECTION. THIS ADDED STRESS REQUIRES MORE SUPPORT.

INSPECTION AND MAINTENANCE:

SILT FENCE BARRIER FOR AREA INLETS SHOULD BE INSPECTED EVERY 7 DAYS AND WITHIN 24 HOURS OF A RAINFALL OF 1/2" OR MORE. THE FOLLOWING IS A LIST OF QUESTIONS THAT SHOULD BE ADDRESSED DURING EACH INSPECTION:

DOES WATER FLOW UNDER THE SILT FENCE?
DOES THE SILT FENCE SAG EXCESSIVELY?
HAS THE SILT FENCE TORN OR BECOME DETACHED FROM THE POSTS?
DOES SEDIMENT NEED TO BE REMOVED FROM BEHIND THE AREA INLET BARRIER?

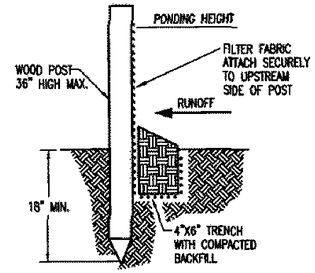

SILT FENCE BARRIERS

MATERIAL SPECIFICATION:

SILT FENCE FABRIC SHOULD CONFORM TO THE AASHTO M288 96 SILT FENCE SPECIFICATION.
THE POSTS USED TO SUPPORT THE SILT FENCE FABRIC SHOULD BE A HARDWOOD MATERIAL WITH THE FOLLOWING MINIMUM DIMENSIONS: 2" SQUARE (NOMINAL) BY 4' LONG.
SILT FENCE FABRIC SHOULD BE ATTACHED TO THE WOODEN POSTS WITH STAPLES, WIRE, ZIP TIES, OR NAILS.

PLACEMENT:

A SLOPE BARRIER SHOULD BE USED AT THE TOE OF A SLOPE WHEN A DITCH DOES NOT EXIST. THE SLOPE BARRIER SHOULD BE PLACED ON NEARLY LEVEL GROUND 5' TO 10' AWAY FROM THE TOE OF A SLOPE. THE BARRIER IS PLACED AWAY FROM THE TOE OF THE SLOPE TO PROVIDE ADEQUATE STORAGE FOR SETTLING OUT SEDIMENT.
WHEN PRACTICABLE, SILT FENCE SLOPE BARRIERS SHOULD BE PLACED ALONG CONTOURS TO AVOID A CONCENTRATION OF FLOW.
SILT FENCE SLOPE BARRIERS CAN ALSO BE PLACED ALONG RIGHT-OF-WAY FENCE LINES TO KEEP SEDIMENT FROM CROSSING ONTO ADJACENT PROPERTY. WHEN PLACED IN THIS MANNER, THE SLOPE BARRIER WILL NOT LIKELY FOLLOW CONTOURS.

PROPER INSTALLATION METHOD:

EXCAVATE A TRENCH THE LENGTH OF THE PLANNED SLOPE BARRIER THAT IS 6" DEEP BY 4" WIDE.
MAKE SURE THAT THE TRENCH IS EXCAVATED ALONG A SINGLE CONTOUR. WHEN PRACTICABLE, SLOPE BARRIERS SHOULD BE PLACED ALONG CONTOURS TO AVOID A CONCENTRATION OF FLOW. PLACE THE SOIL ON THE UPSLOPE SIDE OF THE TRENCH FOR LATER USE.
ROLL OUT A CONTINUOUS LENGTH OF SILT FENCE FABRIC ON THE DOWNSLOPE SIDE OF THE TRENCH.
PLACE THE EDGE OF THE FABRIC IN THE TRENCH STARTING AT THE TOP UPSLOPE EDGE. LINE ALL THREE SIDES OF THE TRENCH WITH THE FABRIC. BACKFILL OVER THE FABRIC IN THE TRENCH WITH THE EXCAVATED SOIL AND COMPACT. AFTER FILLING THE TRENCH, APPROXIMATELY 24" TO 36" OF SILT-FENCE FABRIC SHOULD REMAIN EXPOSED.
LAY THE EXPOSED SILT FENCE UPSLOPE OF THE TRENCH TO CLEAR AN AREA FOR DRIVING IN THE POSTS. JUST DOWNSLOPE OF THE TRENCH, DRIVE POSTS INTO THE GROUND TO A DEPTH OF AT LEAST 18". PLACE POSTS NO MORE THAN 4' APART.
ATTACH THE SILT FENCE TO THE ANCHORED POST WITH STAPLES, WIRE, ZIP TIES, OR NAILS.

LIST OF COMMON PLACEMENT/INSTALLATION MISTAKES TO AVOID:

WHEN PRACTICABLE, DO NOT PLACE SILT FENCE SLOPE BARRIERS ACROSS CONTOURS. SLOPE BARRIERS SHOULD BE PLACED ALONG CONTOURS TO AVOID A CONCENTRATION OF FLOW. WHEN THE FLOW CONCENTRATES, IT OVERTOPS THE BARRIER AND THE SILT FENCE SLOPE BARRIER QUICKLY DETERIORATES.
DO NOT PLACE SILT-FENCE POSTS ON THE UPSLOPE SIDE OF THE SILT FENCE FABRIC. IN THIS CONFIGURATION, THE FORCE OF THE WATER IS NOT RESTRICTED BY THE POSTS, BUT ONLY BY THE STAPLES (WIRE, ZIP TIES, NAILS, ETC.). THE SILT FENCE WILL RIP AND FAIL.
DO NOT PLACE SILT FENCE SLOPE BARRIERS IN AREAS WITH SHALLOW SOILS UNDERLAIN BY ROCK. IF THE BARRIER IS NOT SUFFICIENTLY ANCHORED, IT WILL WASH OUT.
SILT FENCE SLOPE BARRIERS MUST BE DUG INTO THE GROUND-SILT FENCE AT GROUND LEVEL DOES NOT WORK BECAUSE WATER WILL FLOW UNDERNEATH.

INSPECTION AND MAINTENANCE:

SILT FENCE SLOPE BARRIERS SHOULD BE INSPECTED EVERY 7 DAYS AND WITHIN 24 HOURS OF A RAINFALL OF 1/2" OR MORE. THE FOLLOWING IS A LIST OF QUESTIONS THAT SHOULD BE ADDRESSED DURING EACH INSPECTION:

ARE THERE ANY POINTS ALONG THE SLOPE BARRIER WHERE WATER IS CONCENTRATING?
DOES WATER FLOW UNDER THE SLOPE BARRIER?
DO THE SILT FENCES SAG EXCESSIVELY?
HAS THE SILT FENCE TORN OR BECOME DETACHED FROM THE POSTS?
DOES SEDIMENT NEED TO BE REMOVED FROM BEHIND THE SLOPE BARRIER?

REVISION DATE: MAY 2013

GARY L. JANZEN — LICENSED — 16294 — KANSAS — PROFESSIONAL ENGINEER
05/31/13

CITY OF WICHITA
PUBLIC WORKS & UTILITIES
ENGINEERING DIVISION

SILT FENCE DITCH CHECK AND BARRIER DETAILS

CITY ENGINEER
GARY JANZEN, P.E.

PROJECT NUMBER	OCA NUMBER	DATE
472-85158	707065	

CITY ENGINEER'S OFFICE
CITY HALL - SEVENTH FLOOR
455 NORTH MAIN STREET
WICHITA, KANSAS 67202-1620
(316) 268-4501

SHEET
118 OF 183

SW-502
Sh. No. 118

J:\PROJECTS\2014\1401040290 - COW_127TH E 13TH TO 21ST\05-CIVIL\CAD\EROSION\1429SW-502.DWG

PLOTTED: Wednesday, November 29, 2017 @ 03:23PM

NOTE: POINT A MUST BE HIGHER THAN POINT B SO THAT WATER FLOWS OVER THE BALES AND NOT AROUND THEM.

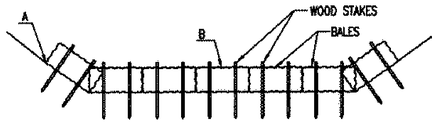

STRAW BALE DITCH CHECKS

MATERIAL SPECIFICATION:

BALE DITCH CHECKS MAY BE CONSTRUCTED OF WHEAT STRAW, OAT STRAW, PRAIRIE HAY, OR BROMEGRASS HAY THAT IS FREE OF WEEDS DECLARED NOXIOUS BY THE KANSAS STATE BOARD OF AGRICULTURE.
THE STAKES USED TO ANCHOR THE BALES SHOULD BE A HARDWOOD MATERIAL WITH THE FOLLOWING MINIMUM DIMENSIONS: 2" SQUARE (NOMINAL) BY 4' LONG.
OPTIONAL: THE DOWNSTREAM SCOUR APRON SHOULD BE CONSTRUCTED OF A DOUBLE-NETTED STRAW EROSION-CONTROL BLANKET AT LEAST 6' WIDE.
OPTIONAL: THE METAL LANDSCAPE STAPLES USED TO ANCHOR THE EROSION-CONTROL BLANKET SHOULD BE AT LEAST 8" LONG.

PLACEMENT:

BALE DITCH CHECKS SHOULD BE PLACED PERPENDICULAR TO THE FLOWLINE OF THE DITCH.
THE DITCH CHECK SHOULD EXTEND FAR ENOUGH SO THAT THE GROUND LEVEL AT THE ENDS OF THE CHECK IS HIGHER THAN THE TOP OF THE LOWEST CENTER BALE. THIS PREVENTS WATER FROM FLOWING AROUND THE CHECK.
STRAW BALE DITCH CHECKS SHOULD NOT BE PLACED IN DITCHES WHERE HIGH FLOWS ARE EXPECTED. ROCK CHECKS SHOULD BE USED INSTEAD.
BALES SHOULD BE PLACED IN DITCHES WITH SLOPES OF 6% OR LESS. FOR SLOPES STEEPER THAN 6%, ROCK CHECKS SHOULD BE USED.
THE FOLLOWING TABLE PROVIDES CHECK SPACING FOR A GIVEN DITCH GRADE:

DITCH CHECK SPACING

DITCH GRADE (%)	CHECK SPACING (FEET)
0.5	200
1.0	200
2.0	100
3.0	65
4.0	50
5.0	40
6.0	30

PROPER INSTALLATION METHOD:

EXCAVATE A TRENCH PERPENDICULAR TO THE DITCH FLOWLINE THAT IS 4" DEEP AND A BALE'S WIDTH WIDE. EXTEND THE TRENCH IN A STRAIGHT LINE ALONG THE ENTIRE LENGTH OF THE PROPOSED DITCH CHECK. PLACE THE SOIL ON THE UPSTREAM SIDE OF THE TRENCH-IT WILL BE USED LATER.
OPTIONAL: ON THE DOWNSTREAM SIDE OF THE TRENCH, ROLL OUT A LENGTH OF EROSION-CONTROL BLANKET (SCOUR APRON) EQUAL TO THE LENGTH OF THE TRENCH. PLACE THE UPSTREAM EDGE OF THE EROSION-CONTROL BLANKET ALONG THE BOTTOM UPSTREAM EDGE OF THE TRENCH. THE EROSION CONTROL BLANKET SHOULD BE ANCHORED IN THE TRENCH WITH ONE ROW OF 8" LANDSCAPE STAPLES PLACED ON 18" CENTERS. THE REMAINDER OF THE EROSION-CONTROL BLANKET (THE PORTION THAT IS NOT LYING IN THE TRENCH) WILL SERVE AS THE DOWNSTREAM SCOUR APRON. THIS SECTION OF THE BLANKET SHOULD BE ANCHORED TO THE GROUND WITH 8" LANDSCAPE STAPLES PLACED AROUND THE PERIMETER OF THE BLANKET ON 18" CENTERS. THE REMAINDER OF THE BLANKET SHOULD BE ANCHORED USING TWO EVENLY SPACED ROWS OF 8" LANDSCAPE STAPLES ON 18" CENTERS PLACED PERPENDICULAR TO THE FLOWLINE OF THE DITCH.
PLACE THE BALES IN THE TRENCH, MAKING SURE THAT THEY ARE BUTTED TIGHTLY. TWO STAKES SHOULD BE DRIVEN THROUGH EACH BALE ALONG THE CENTERLINE OF THE DITCH CHECK, APPROXIMATELY 6" TO 8" IN FROM THE BALE ENDS. STAKES SHOULD BE DRIVEN AT LEAST 12" INTO THE GROUND.
ONCE ALL THE BALES HAVE BEEN INSTALLED AND ANCHORED, PLACE THE EXCAVATED SOIL AGAINST THE UPSTREAM SIDE OF THE CHECK AND COMPACT IT. THE COMPACTED SOIL SHOULD BE NO MORE THAN 3" TO 4" DEEP AND EXTEND UPSTREAM NO MORE THAN 24".

LIST OF COMMON PLACEMENT/INSTALLATION MISTAKES TO AVOID:

DO NOT PLACE A BALE DITCH CHECK DIRECTLY IN FRONT OF A CULVERT OUTLET. IT WILL NOT STAND UP TO THE CONCENTRATED FLOW.
DO NOT PLACE BALE DITCH CHECKS IN DITCHES THAT WILL LIKELY EXPERIENCE HIGH FLOWS. THEY WILL NOT STAND UP TO CONCENTRATED FLOW.
FOLLOW PRESCRIBED DITCH-CHECK SPACING GUIDELINES. IF SPACING GUIDELINES ARE EXCEEDED, EROSION WILL OCCUR BETWEEN THE DITCH CHECKS.
DO NOT ALLOW WATER TO FLOW AROUND THE DITCH CHECK. MAKE SURE THAT THE DITCH CHECK IS LONG ENOUGH SO THAT THE GROUND LEVEL AT THE ENDS OF THE CHECK IS HIGHER THAN THE TOP OF THE LOWEST CENTER BALE.
DO NOT PLACE BALE DITCH CHECKS IN CHANNELS WITH SHALLOW SOILS UNDERLAIN BY ROCK. IF THE CHECK IS NOT ANCHORED SUFFICIENTLY, IT WILL WASH OUT.
BALE DITCH CHECKS MUST BE DUG INTO THE GROUND. BALES AT GROUND LEVEL DO NOT WORK BECAUSE THEY ALLOW WATER TO FLOW UNDER THE CHECK.

INSPECTION AND MAINTENANCE:

BALE DITCH CHECKS SHOULD BE INSPECTED EVERY 7 DAYS AND WITHIN 24 HOURS OF A RAINFALL OF 1/2" OR MORE. THE FOLLOWING IS A LIST OF QUESTIONS THAT SHOULD BE ADDRESSED DURING EACH INSPECTION:

DOES WATER FLOW AROUND THE DITCH CHECK?
DOES WATER FLOW UNDER THE DITCH CHECK?
DOES WATER FLOW THROUGH SPACES BETWEEN ABUTTING BALES?
ARE ANY BALES AND/OR SCOUR APRONS (OPTIONAL) DISLODGED?
ARE BALES DECOMPOSING DUE TO AGE AND/OR WATER DAMAGE?
DOES SEDIMENT NEED TO BE REMOVED FROM BEHIND THE DITCH CHECK?

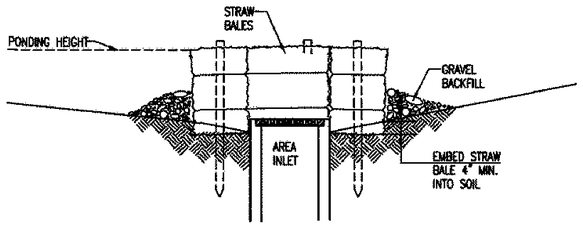

SECTION A-A

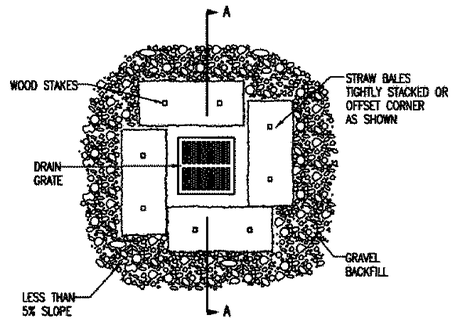

STRAW BALE BARRIERS FOR AREA INLETS

(INLET PROTECTION)

MATERIAL SPECIFICATION:

BALE AREA INLET BARRIERS SHOULD BE CONSTRUCTED OF WHEAT STRAW, OAT STRAW, PRAIRIE HAY, OR BROMEGRASS HAY THAT IS FREE OF WEEDS DECLARED NOXIOUS BY THE KANSAS STATE BOARD OF AGRICULTURE.
THE STAKES USED TO ANCHOR THE BALES SHOULD BE A HARDWOOD MATERIAL WITH THE FOLLOWING MINIMUM DIMENSIONS: 2" SQUARE (NOMINAL) BY 4' LONG.
TWINE SHOULD BE USED TO BIND BALES. THE USE OF WIRE BINDING IS PROHIBITED BECAUSE IT DOES NOT BIODEGRADE READILY.

PLACEMENT:

BALE AREA INLET BARRIERS SHOULD BE PLACED DIRECTLY AROUND THE PERIMETER OF A DROP INLET. WHEN A BALE AREA INLET BARRIER IS LOCATED NEAR AN INLET THAT HAS STEEP APPROACH SLOPES, THE STORAGE CAPACITY BEHIND THE BARRIER IS DRASTICALLY REDUCED. TIMELY REMOVAL OF SEDIMENT MUST OCCUR FOR A BARRIER TO OPERATE PROPERLY IN THIS LOCATION.

PROPER INSTALLATION METHOD:

EXCAVATE A TRENCH AROUND THE PERIMETER OF THE AREA INLET THAT IS AT LEAST 4" DEEP BY A BALE'S WIDTH WIDE.
PLACE THE BALES IN THE TRENCH, MAKING SURE THAT THEY ARE BUTTED TIGHTLY. SOME BALES MAY NEED TO BE SHORTENED TO FIT INTO THE TRENCH AROUND THE AREA INLET. TWO STAKES SHOULD BE DRIVEN THROUGH EACH BALE, APPROXIMATELY 6" TO 8" IN FROM THE BALE ENDS.
STAKES SHOULD BE DRIVEN AT LEAST 12" INTO THE GROUND.
ONCE ALL THE BALES HAVE BEEN INSTALLED AND ANCHORED, PLACE THE EXCAVATED SOIL AGAINST THE RECEIVING SIDE OF THE BARRIER AND COMPACT IT. THE COMPACTED SOIL SHOULD BE NO MORE THAN 3" TO 4" DEEP.
NOTE: WHEN A BALE AREA INLET BARRIER IS PLACED IN A SHALLOW MEDIAN DITCH, MAKE SURE THAT THE TOP OF THE BARRIER IS NOT HIGHER THAN THE PAVED ROAD. IN THIS CONFIGURATION, WATER MAY SPREAD ONTO THE ROADWAY CAUSING A HAZARDOUS CONDITION.

LIST OF COMMON PLACEMENT INSTALLATION MISTAKES TO AVOID:

BALES SHOULD BE PLACED DIRECTLY AGAINST THE PERIMETER OF THE AREA INLET. THIS ALLOWS OVERTOPPING WATER TO FLOW DIRECTLY INTO THE INLET INSTEAD OF ONTO NEARBY SOIL CAUSING SCOUR.
BALE AREA INLET BARRIERS MUST BE DUG INTO THE GROUND. BALES AT GROUND LEVEL DO NOT WORK BECAUSE THEY ALLOW WATER TO FLOW UNDER THE BARRIER.

INSPECTION AND MAINTENANCE:

BALE AREA INLET BARRIERS SHOULD BE INSPECTED EVERY 7 DAYS AND WITHIN 24 HOURS OF A RAINFALL 1/2" OR MORE. THE FOLLOWING IS A LIST OF QUESTIONS THAT SHOULD BE ADDRESSED DURING EACH INSPECTION:

DOES WATER FLOW UNDER THE AREA INLET BARRIER?
DOES WATER FLOW THROUGH SPACES BETWEEN ABUTTING BALES?
ARE ANY BALES DISLODGED?
ARE BALES DECOMPOSING DUE TO AGE AND/OR WATER DAMAGE?
DOES SEDIMENT NEED TO BE REMOVED FROM BEHIND THE AREA INLET BARRIER?

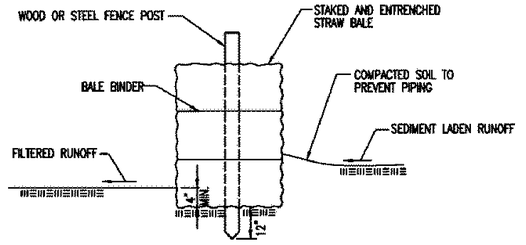

STRAW BALE BARRIERS

MATERIAL SPECIFICATION:

BALE SLOPE BARRIERS MAY BE CONSTRUCTED OF WHEAT STRAW, OAT STRAW, PRAIRIE HAY, OR BROMEGRASS HAY THAT IS FREE OF WEEDS DECLARED NOXIOUS BY THE KANSAS STATE BOARD OF AGRICULTURE.
THE STAKES USED TO ANCHOR THE BALES SHOULD BE A HARDWOOD MATERIAL WITH THE FOLLOWING MINIMUM DIMENSIONS: 2" SQUARE (NOMINAL) BY 4' LONG.
TWINE SHOULD BE USED TO BIND BALES. THE USE OF WIRE BINDING IS PROHIBITED BECAUSE IT DOES NOT BIODEGRADE READILY.

PLACEMENT:

A SLOPE BARRIER SHOULD BE USED AT THE TOE OF A SLOPE WHEN A DITCH DOES NOT EXIST. THE SLOPE BARRIER SHOULD BE PLACED ON NEARLY LEVEL GROUND 5' TO 10' AWAY FROM THE TOE OF A SLOPE. THE BARRIER IS PLACED AWAY FROM THE TOE OF THE SLOPE TO PROVIDE ADEQUATE STORAGE FOR SETTLING OUT SEDIMENT.
WHEN PRACTICABLE, BALE SLOPE BARRIERS SHOULD BE PLACED ALONG CONTOURS TO AVOID A CONCENTRATION OF FLOW.
BALE SLOPE BARRIERS CAN ALSO BE PLACED ALONG RIGHT-OF-WAY FENCE LINES TO KEEP SEDIMENT FROM CROSSING ONTO ADJACENT PROPERTY. WHEN PLACED IN THIS MANNER, THE SLOPE BARRIER WILL NOT LIKELY FOLLOW CONTOURS.

PROPER INSTALLATION METHOD:

EXCAVATE A TRENCH THE LENGTH OF THE PLANNED SLOPE BARRIER THAT IS 4" DEEP AND A BALE'S WIDTH WIDE. MAKE SURE THAT THE TRENCH IS EXCAVATED ALONG A SINGLE CONTOUR. WHEN PRACTICABLE, SLOPE BARRIERS SHOULD BE PLACED ALONG CONTOURS TO AVOID A CONCENTRATION OF FLOW. PLACE THE SOIL ON THE UPSLOPE SIDE OF THE TRENCH FOR LATER USE.
PLACE THE BALES IN THE TRENCH, MAKING SURE THAT THEY ARE BUTTED TIGHTLY. TWO STAKES SHOULD BE DRIVEN THROUGH EACH BALE ALONG THE CENTERLINE OF THE DITCH CHECK, APPROXIMATELY 6" TO 8" IN FROM THE BALE ENDS. STAKES SHOULD BE DRIVEN AT LEAST 12" INTO THE GROUND.
ONCE ALL THE BALES HAVE BEEN INSTALLED AND ANCHORED, PLACE THE EXCAVATED SOIL AGAINST THE UPSLOPE SIDE OF THE CHECK AND COMPACT IT. THE COMPACTED SOIL SHOULD BE NO MORE THAN 3" TO 4" DEEP.

LIST OF COMMON PLACEMENT/INSTALLATION MISTAKES TO AVOID:

WHEN PRACTICAL, DO NOT PLACE BALE SLOPE BARRIERS ACROSS CONTOURS. SLOPE BARRIERS SHOULD BE PLACED ALONG CONTOURS TO AVOID A CONCENTRATION OF FLOW. CONCENTRATED FLOW OVER A SLOPE BARRIER CREATES A SCOUR HOLE ON THE DOWNSLOPE SIDE OF THE BARRIER. THE SCOUR HOLE EVENTUALLY UNDERMINES THE BALES AND THE BARRIER FAILS.
DO NOT PLACE BALE SLOPE BARRIERS IN AREAS WITH SHALLOW SOILS UNDERLAIN BY ROCK. IF THE BARRIER IS NOT ANCHORED SUFFICIENTLY, IT WILL WASH OUT.
BALE SLOPE BARRIERS MUST BE DUG INTO THE GROUND. BALES AT GROUND LEVEL DO NOT WORK BECAUSE THEY ALLOW WATER TO FLOW UNDER THE BARRIER.

INSPECTION AND MAINTENANCE:

BALE SLOPE BARRIERS SHOULD BE INSPECTED EVERY 7 DAYS AND WITHIN 24 HOURS OF A RAINFALL OF 1/2" OR MORE. THE FOLLOWING IS A LIST OF QUESTIONS THAT SHOULD BE ADDRESSED DURING EACH INSPECTION:

ARE THERE ANY POINTS ALONG THE SLOPE BARRIER WHERE WATER IS CONCENTRATING?
DOES WATER FLOW UNDER THE SLOPE BARRIER?
DOES WATER FLOW THROUGH SPACES BETWEEN ABUTTING BALES?
ARE ANY BALES DISLODGED?
ARE BALES DECOMPOSING DUE TO AGE AND/OR WATER DAMAGE?
DOES SEDIMENT NEED TO BE REMOVED FROM BEHIND THE SLOPE BARRIER?

REVISION DATE: MAY 2013

GARY L. JANZEN — REGISTERED — KANSAS — PROFESSIONAL ENGINEER
5.13.13

CITY OF WICHITA
PUBLIC WORKS & UTILITIES ENGINEERING DIVISION

STRAW BALE DITCH CHECK AND BARRIER DETAILS

CITY ENGINEER
GARY JANZEN, P.E.

PROJECT NUMBER	OCA NUMBER	DATE
472-85158	707065	

CITY ENGINEER'S OFFICE
CITY HALL - SEVENTH FLOOR
455 NORTH MAIN STREET
WICHITA, KANSAS 67202-1620
(316) 268-4501

SHEET
119 OF 183

SW-503
Sh. No. 119

J:\PROJECTS\2014\1401040299 - COW_127TH E 13TH TO 215TH\05-CIVIL\CAD\EROSION\1429SW-503.DWG

PLOTTED: Wednesday, November 29, 2017 @ 03:23PM

GENERAL NOTES

1. THIS SHEET IS INTENDED TO PROVIDE GUIDELINES AS TO WHAT TYPES OF EROSION CONTROL DEVICES WILL BE INSTALLED DURING THE CONSTRUCTION PROCESS. CONTRACTORS ARE EXPECTED TO BID PROJECTS ACCORDINGLY.
2. EROSION CONTROL DEVICES MUST BE MAINTAINED BY THE CONTRACTOR THROUGHOUT THE CONSTRUCTION PROCESS AND UNTIL THE DISTURBED EARTH IS RESTABILIZED.
3. IF THE PROJECT WILL DISTURB 1 ACRE OR MORE, A FEDERAL/STATE NPDES STORMWATER PERMIT IS REQUIRED. A DETAILED STORMWATER POLLUTION PREVENTION PLAN, IS REQUIRED. THE EROSION CONTROL DEVICES SHOWN ON THIS SHEET ARE CONSIDERED TO BE THE MINIMUM TO BE SHOWN IN THE POLLUTION PREVENTION PLAN.
4. FOR PROJECTS DISTURBING LESS THAN 1 ACRE, CONTRACTORS ARE ENCOURAGED TO PREPARE STORMWATER POLLUTION PREVENTION PLANS PRIOR TO CONSTRUCTION. EROSION CONTROL DEVICES MUST BE USED ON ALL PROJECTS.
5. FAILURE TO USE AND MAINTAIN EROSION CONTROL DEVICES IS A VIOLATION OF SECTION 16.32 OF THE CITY CODE AND WILL SUBJECT THE CONTRACTOR TO THE PENALTIES PROVIDED FOR THEREIN.
6. THE APPLICATION OF EROSION CONTROL DEVICES SHOWN ON THIS SHEET IS FOR SITUATIONS NORMALLY ENCOUNTERED. FROM TIME TO TIME, SITUATIONS WILL ARISE THAT MAY REQUIRE A DIFFERENT DEVICE OTHER THAN THOSE SHOWN. EROSION CONTROL DEVICES, OTHER THAN THOSE SHOWN, MAY BE UTILIZED AS LONG AS THEY ARE EFFECTIVE AND MAINTAINED.

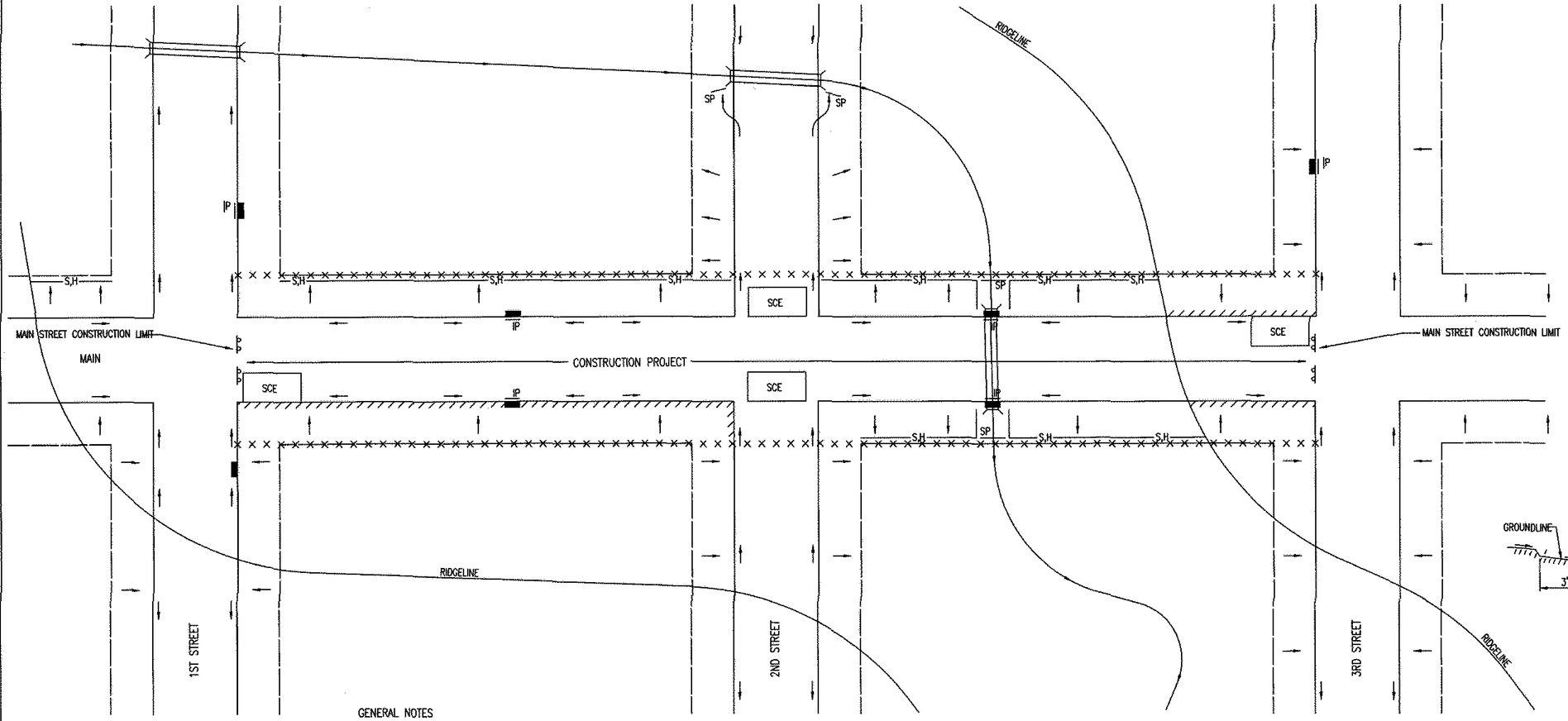

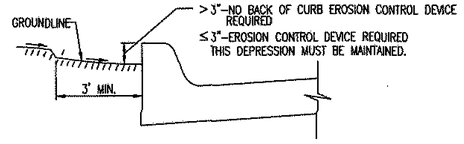

CURB BACKFILL DETAIL

THIS IS A TEMPORARY MEASURE ONLY, WHEN APPROVED BY THE PROJECT ENGINEER. THE DIRT GRADE BEHIND THE CURB SHALL BE BROUGHT TO THE TOP OF CURB, WITH TEMPORARY EROSION CONTROL MAT OR PERMANENT VEGETATION PLACED, PRIOR TO THE COMPLETION OF ALL PROJECTS.

LEGEND

- R-O-W LIMITS
- DRAINAGE FLOW PATH
- R/W LIMIT WITHIN CONSTRUCTION LIMIT
- STORM WATER INLETS
- IP — INLET PROTECTION
- S,H — SILT FENCE OR HAY BALE BARRIER
- SP — STREAM PROTECTION
- SCE — STABILIZED CONSTRUCTION ENTRANCE
- BACK OF CURB PROTECTION

GENERAL NOTES

1. THE INTENT OF ALL EROSION CONTROL DEVICES IS TO KEEP ALL SEDIMENT CONFINED TO THE CONSTRUCTION SITE, AND OUT OF ALL UNDERGROUND PIPES, DITCHES, LAKES, AND OTHER DRAINAGE FACILITIES, AND OFF OF STREETS.
2. THE POINT OF COMPLIANCE IS GENERALLY THE RIGHT-OF-WAY LINES WITHIN THE LIMITS OF CONSTRUCTION.
3. EROSION CONTROL DEVICES WILL BE REQUIRED AT ALL POINTS ALONG THE PROJECT WHERE DISTURBED EARTH CAN DRAIN ONTO PRIVATE PROPERTY.
4. INLET PROTECTION DEVICES WILL BE REQUIRED WHEREVER WATER CAN DRAIN OFF THE PROJECT SITE INTO AN INLET, INCLUDING ANY SIDE *STREET INLETS*.
5. EROSION CONTROL DEVICES SHALL BE INSTALLED AT CREEK CROSSINGS SO AS TO PREVENT SEDIMENT FROM ENTERING THEREIN.
6. STABILIZED CONSTRUCTION ENTRANCES SHALL BE PROVIDED, AS NEEDED, TO PREVENT MUD FROM TRACKING ONTO STREETS NOT UNDER CONSTRUCTION AND ON STREETS WITHIN THE PROJECT LIMITS IF TRAFFIC IS BEING MAINTAINED THROUGH THE PROJECT.
7. ANY MUD TRACKED ONTO STREETS MUST BE REMOVED AT THE END OF EACH WORK DAY.
8. THE CONTACTOR WILL BE REQUIRED TO PLACE EROSION CONTROL DEVICES BACK OF CURB, WHENEVER WATER CAN DRAIN OVER CURB, TO KEEP ERODED SOIL OUT OF THE GUTTERLINES, IN ACCORDANCE WITH THE FOLLOWING:
   A. THE DEVICE REQUIRED WILL BE APPROVED EROSION CONTROL MAT LISTED ON THE CITY'S APPROVED MATERIAL LIST. SAID BLANKET SHALL BE PLACED OVER THE APPROPRIATE SEED AND FERTILIZER, AS SPECIFIED IN THE PROJECT SPECIFICATIONS. (SEE SOIL EROSION BMPs – BACK OF CURB SEDIMENT BARRIER DETAILS)
   B. THIS DEVICE SHALL BE INSTALLED IMMEDIATELY WHENEVER THE CURB IS BACKFILLED TO WITHIN 3" OF THE TOP OF CURB. (SEE CURB BACKFILL DETAIL) OTHER BMP'S MAY BE REQUIRED AT LOCATIONS WHERE CONCENTRATED FLOW CARRIES SEDIMENT OVER THE CURB.
   C. ADDITIONALLY, OTHER EROSION CONTROL DEVICES (HAY BALES, SILT FENCE, ETC.) WILL BE INSTALLED AT LOCATIONS OF CONCENTRATED FLOW RESULTING IN SEDIMENT OVERRUNNING THE MAT.
   D. SHOULD THE PROJECT PLANS SPECIFY THAT THE RIGHT-OF-WAY IS TO BE SODDED, THE EXCELSIOR MAT WILL NOT BE REQUIRED SO LONG AS THE SOD IS PLACED WITHIN 48 HOURS AFTER CURB BACKFILL REACHES A HEIGHT OF 3" OR LESS FROM TOP OF CURB. (SEE CURB BACKFILL DETAIL)

GARY L. JANZEN — LICENSED — 18264 — KANSAS — PROFESSIONAL ENGINEER — 06/05/15

REVISION: JUNE 2015

CITY OF WICHITA
PUBLIC WORKS & UTILITIES ENGINEERING DIVISION

STREET IMPROVEMENT PROJECTS

CITY ENGINEER: GARY JANZEN, P.E.

PROJECT NUMBER	OCA NUMBER	DATE
472-85158	707065	

CITY ENGINEER'S OFFICE
CITY HALL - SEVENTH FLOOR
455 NORTH MAIN STREET
WICHITA, KANSAS 67202-1620
(316) 268-4501

SHEET: 120 OF 183

SW-504
Sh. No. 120

J:\PROJECTS\2014\1401040290 - COW_-127TH E 13TH TO 21ST\05-CIVIL\CAD\EROSION\1429SW-504.DWG

PLOTTED: Wednesday, November 29, 2017 @ 03:23PM

PHASE 1 – INITIAL EARTHWORK AND UTILITIES (EXCEPT STORM SEWER)

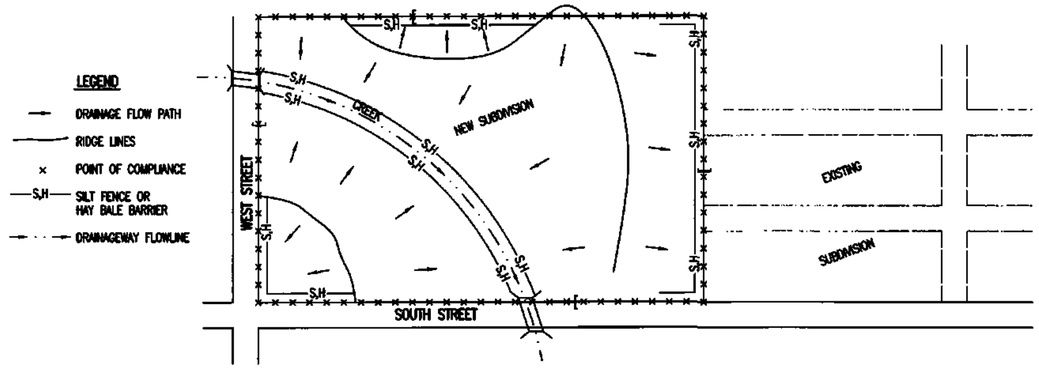

1. DURING THIS PHASE OF SUBDIVISION CONSTRUCTION, THE POINTS OF COMPLIANCE ARE THE PERIMETER BOUNDARIES AND ANY DRAINAGE WAYS OR STORM SEWERS DRAINING THROUGH OR FROM THE SITE. SHOULD LAKES BE CONSTRUCTED WITHIN THE SUBDIVISION THAT WILL DISCHARGE DURING STORMS, THEY ARE ALSO A POINT OF COMPLIANCE.
2. HAY BALES OR SILT FENCE MUST BE CONSTRUCTED ALONG THE PROPERTY LINE WHERE ON SITE WATER CAN DRAIN OFF THE PROPERTY. THESE EROSION CONTROL DEVICES WILL ALSO BE INSTALLED ALONG ANY DRAINAGE DITCH OR LAKE THAT CAN DISCHARGE.
3. SHOULD SILT OR SEDIMENT ENTER THE DITCHES OR STREETS ON THE ADJACENT BOUNDARY STREETS, APPROPRIATE EROSION CONTROL DEVICES WILL BE PLACED WITHIN THE SUBDIVISION TO PREVENT THIS.
4. ANY MUD TRACKED ONTO ADJACENT STREETS WILL BE REMOVED WITHIN 48 HOURS OR BY FRIDAY AT 6:00 PM, WHICHEVER IS EARLIER.
5. CONTRACTORS WORKING WITHIN THE SITE WILL NOT BE REQUIRED TO USE INDIVIDUAL EROSION CONTROL DEVICES AS LONG AS THOSE SPECIFIED ABOVE ARE IN PLACE AND EFFECTIVE. CONTRACTORS WORKING ON THE BOUNDARY LINE STREETS OR ON ADJACENT PROPERTIES TO EXTEND UTILITIES ARE EXPECTED TO USE EROSION CONTROL DEVICES AT THEIR WORK LOCATIONS, AS NEEDED.
6. UTILIZE STABILIZED CONSTRUCTION ENTRANCE AT ENTRANCE AND EXIT ONTO ANY EXISTING PUBLIC STREETS.
7. IF THE INITIAL EARTH WORK AND UTILITIES ARE DONE AS PART OF A PUBLIC IMPROVEMENT PROJECT, THESE EROSION CONTROL DEVICES WILL BE INSTALLED BY THE CONTRACTOR AS SPECIFIED IN THE INDIVIDUAL PROJECT CONTRACTS. THE CONTRACTOR WILL MAINTAIN THE DEVICES UNTIL COMPLETION OF THE CONTRACT, AT WHICH TIME THE DEVELOPER WILL ASSUME MAINTENANCE RESPONSIBILITIES. IF THESE CONTRACTS ARE NOT PUBLIC IMPROVEMENT PROJECTS, THE DEVELOPER WILL BE RESPONSIBLE FOR INSTALLING AND MAINTAINING THESE DEVICES.
8. WITHIN 14 DAYS OF COMPLETION OF EARTHWORK ACTIVITIES IN ANY GIVEN AREA, THAT AREA SHALL BE TEMPORARILY OR PERMANENTLY SEEDED AND MULCHED.

PHASE 2 – INSTALLATION OF STORM SEWER

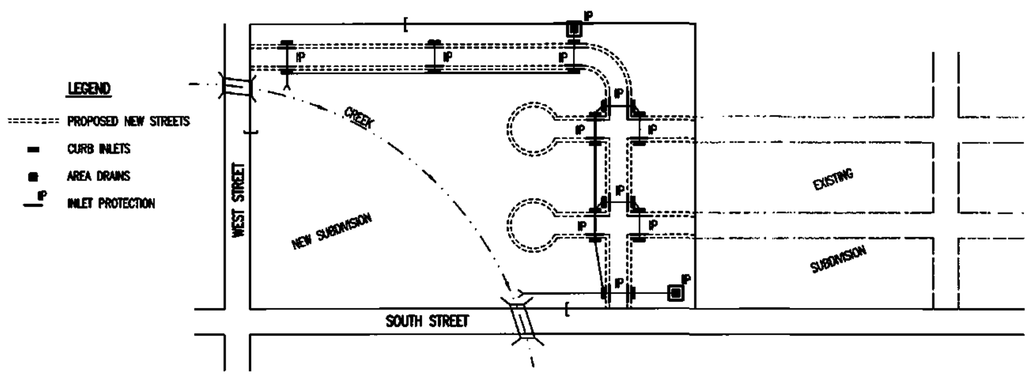

1. DURING THIS PHASE OF SUBDIVISION DEVELOPMENT, ALL EROSION CONTROL DEVICES REQUIRED IN PHASE 1 SHALL REMAIN IN PLACE AND BE MAINTAINED.
2. AS NEW STORM SEWERS, WITH INLETS, ARE INSTALLED, THE STORM SEWERS MUST NOW BE PROTECTED SO ALL NEW INLETS BECOME POINTS OF COMPLIANCE.
3. AREA DRAINS – AS SOON AS WATER CAN FLOW INTO THESE DRAINS, HAY BALE OR SILT FENCE PROTECTION WILL BE INSTALLED AROUND THEM.
4. CURB OPENING INLETS – AS SOON AS WATER CAN FLOW INTO THESE DRAINS, INLET PROTECTION DEVICES MUST BE INSTALLED. IF WATER CANNOT FLOW INTO CURB INLETS UNTIL STREET CONSTRUCTION IS COMPLETE, THEN STREET CONTRACTOR WILL INSTALL INLET PROTECTION. SEE PHASE 3 – STREET CONSTRUCTION.
5. THE STORM SEWER CONTRACTOR WILL BE RESPONSIBLE FOR INSTALLING THESE DEVICES.
6. THE SUBDIVISION DEVELOPER WILL MAINTAIN THESE EROSION CONTROL DEVICES ONCE INSTALLED.
7. ALL DISTURBED GROUND WILL BE FINAL GRADED AND TEMPORARILY OR PERMANENTLY SEEDED WITHIN 14 DAYS IF COMPLETION OF WORK IN ANY GIVEN PART OF THE SUBDIVISION.
8. ONCE ALL DISTURBED GROUND DRAINING TO AN INLET HAS BEEN RESTABILIZED WITH GRASS OR SOD, THE SUBDIVISION DEVELOPER WILL BE RESPONSIBLE FOR PERMANENTLY REMOVING THE INLET PROTECTION.

PHASE 3 – STREET CONSTRUCTION

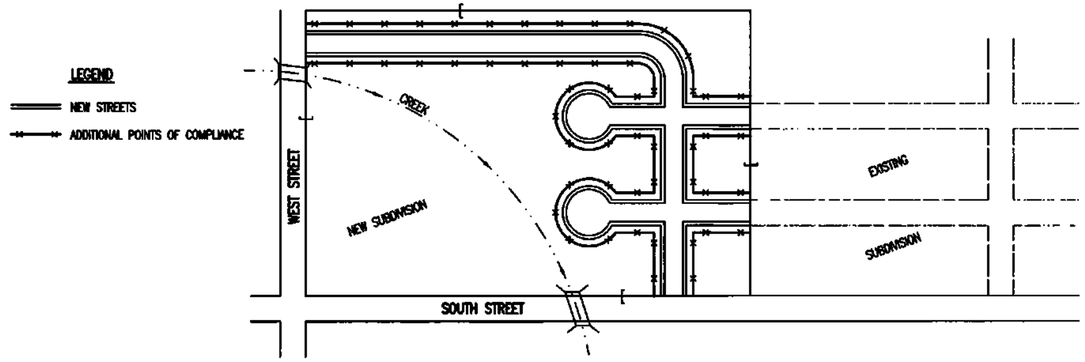

1. DURING THIS PHASE OF SUBDIVISION CONSTRUCTION, NEW STREETS ARE INSTALLED. ALL EROSION CONTROL DEVICES INSTALLED DURING PHASE 1 AND 2 MUST STILL BE MAINTAINED. THE POINT OF COMPLIANCE NOW SHIFTS TO THE BACK OF CURB ALONG EACH STREET.
2. CURB OPENING INLET PROTECTION:
   A. SUMP AREAS – INLET PROTECTION SHALL BE PROVIDED WHEN STREET SUBGRADE WORK IS COMPLETED.
   B. NON-SUMP LOCATIONS – PROVIDE INLET PROTECTION AS SOON AS BASE COURSE ASPHALT IS INSTALLED, BEFORE THE SURFACE COURSE LIFT.
3. EROSION CONTROL DEVICES WILL BE REQUIRED BACK OF CURB WHEREVER WATER CAN FLOW OVER THE CURB AND THE CURB HAS BEEN BACKFILLED TO WITHIN 3" OR LESS OF THE TOP OF CURB (SEE CURB BACKFILL DETAIL). FOR CURBS NOT YET ENTIRELY BACKFILLED (3" OR MORE BELOW TOP OF CURB), ADDITIONAL DEVICES WILL BE REQUIRED AT POINTS WHERE WATER BREAKS OVER CURB WHICH COULD RESULT IN THE PLACEMENT OF SEDIMENT IN THE GUTTER.
4. SEE DETAIL SHEET FOR BACK OF CURB PROTECTION.
5. THE BACK OF CURB PROTECTION SPECIFIED ON THIS PLAN MAY HAVE TO BE SUPPLEMENTED WITH HAY BALE OR SILT FENCE EROSION CONTROL DEVICES AT LOCATIONS WHERE CONCENTRATED FLOW RESULTS IN SEDIMENT BEING CARRIED OVER THE EXCELSIOR MATS.
6. THE STREET CONTRACTOR WILL BE RESPONSIBLE FOR INSTALLING BACK OF CURB EROSION CONTROL DEVICES.
7. THE INDIVIDUAL LOT OWNERS WILL BE RESPONSIBLE FOR MAINTAINING THE BACK OF CURB EROSION CONTROL DEVICES IN FRONT OF THEIR LOTS UNTIL SUCH TIME AS ADJACENT DISTURBED EARTH IS STABILIZED WITH GRASS OR SOD.

GENERAL NOTES

1. THE INTENT OF ALL EROSION CONTROL DEVICES IS TO PREVENT ERODED SOIL FROM ENTERING DITCHES, STORM SEWERS, LAKES, STREETS OR ANY OTHER OTHER DRAINAGE FEATURE.
2. THIS SHEET IS INTENDED TO PROVIDE GUIDELINES AS TO WHAT TYPE OF EROSION CONTROL DEVICES WILL BE INSTALLED DURING THE CONSTRUCTION PROCESS. CONTRACTORS ARE EXPECTED TO BID PROJECTS ACCORDINGLY.
3. EROSION CONTROL DEVICES SHALL BE MAINTAINED DURING THE CONSTRUCTION PROCESS TO REMAIN EFFECTIVE. MAINTENANCE SHALL BE AS INDICATED ON SOIL EROSION BMP'S DETAIL SHEETS.
4. PERSONS DESTROYING EROSION CONTROL DEVICES SHALL BE RESPONSIBLE FOR IMMEDIATELY REPAIRING THEM OR INSTALLING SUITABLE REPLACEMENT DEVICES.
5. THE DEVELOPMENT OF ANY SUBDIVISION THAT DISTURBS 1 ACRE OR MORE WILL REQUIRE A FEDERAL/STATE NPDES STORMWATER PERMIT. THE PREPARATION OF A STORMWATER POLLUTION PREVENTION PLAN IS REQUIRED. EROSION CONTROL DEVICES ARE REQUIRED. THE DETAILS SHOWN ON THIS SHEET ARE THE MINIMUM STANDARDS TO BE SHOWN ON POLLUTION PREVENTION PLANS.
6. FOR SUBDIVISIONS SMALLER THAN 1 ACRE, SOIL EROSION DEVICES ARE REQUIRED. ALSO, DEVELOPERS AND CONTRACTORS ARE ENCOURAGED TO DEVELOP POLLUTION PREVENTION PLANS FOR EACH PROJECT PRIOR TO CONSTRUCTION.
7. FAILURE TO USE AND MAINTAIN SOIL EROSION DEVICES IS A VIOLATION OF SECTION 16.32 OF THE CITY CODE AND WILL SUBJECT THE SUBDIVISION DEVELOPER AND CONTRACTORS TO THE PENALTIES PROVIDED THEREIN.
8. THE APPLICATION OF EROSION CONTROL DEVICES SHOWN ON THIS SHEET IS FOR SITUATIONS NORMALLY ENCOUNTERED. FROM TIME TO TIME, SITUATIONS WILL ARISE THAT MAY REQUIRE DEVICES OTHER THAN THAT SHOWN. EROSION CONTROL DEVICES, OTHER THAN THOSE SHOWN, MAY BE UTILIZED SO LONG AS THEY ARE EFFECTIVE AND MAINTAINED.
9. A STABILIZED EARTH SURFACE IS DEFINED AS ONE THAT IS HARD SURFACED WITH CONCRETE, ASPHALT, OR THE LIKE, OR ONE ON WHICH 70% OF THE GRASS HAS GERMINATED ON THE ENTIRE SURFACE.

SEE DETAIL SHEET FOR BACK OF CURB PROTECTION DETAIL

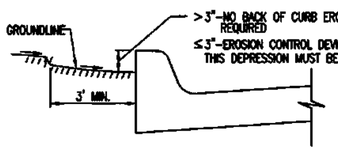

CURB BACKFILL DETAIL (STREET CONSTRUCTION ONLY)

THIS IS A TEMPORARY MEASURE ONLY, WHEN APPROVED BY THE PROJECT ENGINEER. THE DIRT GRADE BEHIND THE CURB SHALL BE BROUGHT TO THE TOP OF CURB, WITH TEMPORARY EROSION CONTROL MAT OR PERMANENT VEGETATION PLACED, PRIOR TO THE COMPLETION OF ALL PROJECTS.

REVISION DATE: MAY 2013

GARY L. JANZEN LICENSED PROFESSIONAL ENGINEER KANSAS 16208
05.12.13

CITY OF WICHITA
PUBLIC WORKS & UTILITIES ENGINEERING DIVISION

SUBDIVISION DEVELOPMENT PROCESS

CITY ENGINEER: GARY JANZEN, P.E.

PROJECT NUMBER	OCA NUMBER	DATE
472-85158	707065	

CITY ENGINEER'S OFFICE
CITY HALL - SEVENTH FLOOR
455 NORTH MAIN STREET
WICHITA, KANSAS 67202-1620
(316) 268-4501

SHEET: 121 OF 183

SW-505
Sh. No. 121

J:\PROJECTS\2014\0140104090 - COW_127TH E 13TH TO 21ST\05-CIVIL\CAD\EROSION\1429SWV-505.DWG

PLOTTED: Wednesday, November 29, 2017 @ 03:24PM

STATE	PROJECT NO.	YEAR	SHEET NO.	TOTAL SHEETS
KANSAS	87 N-0615-01	2017	122	183

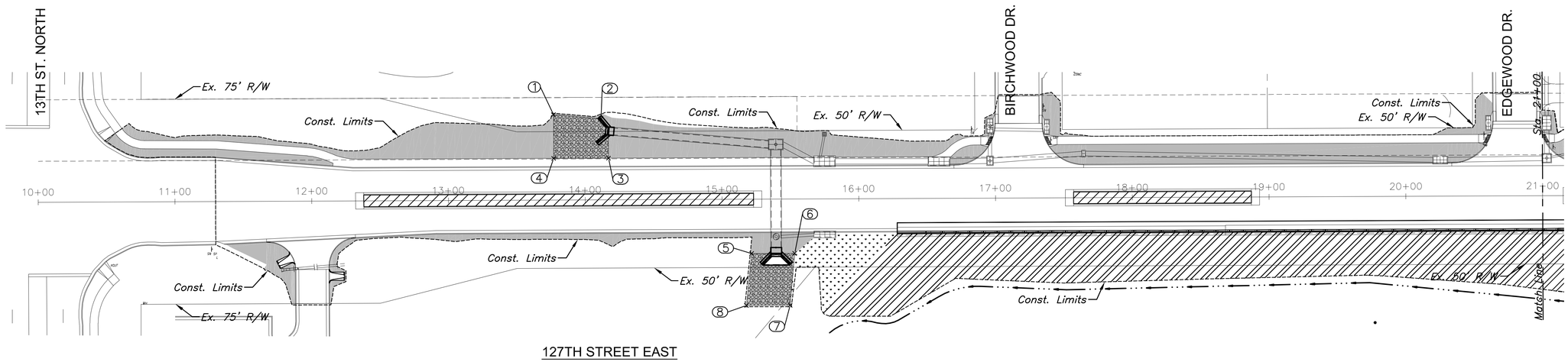

127TH STREET EAST

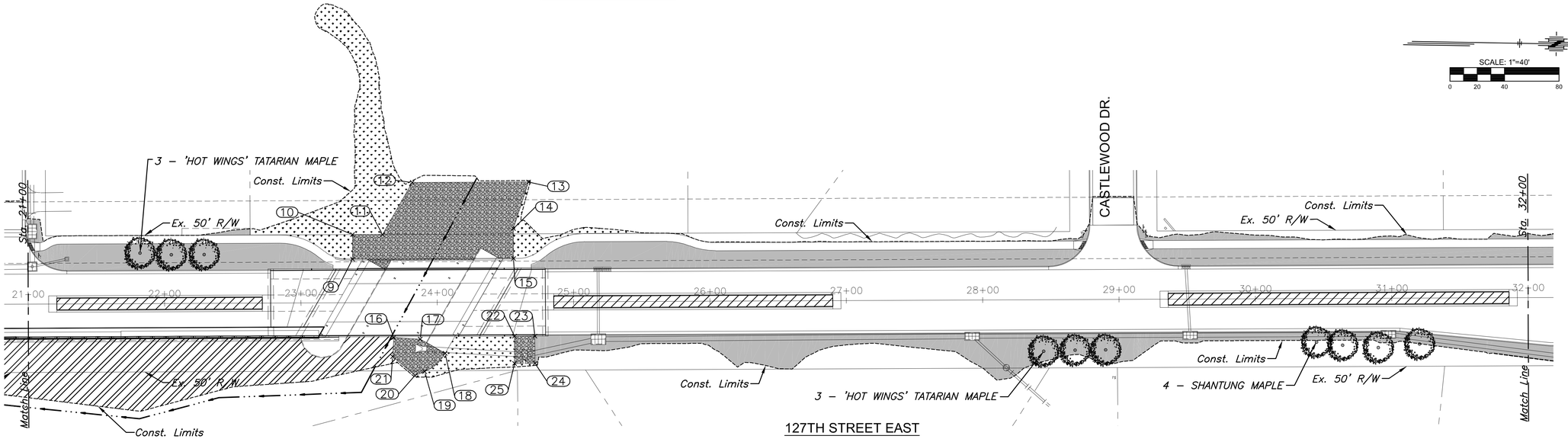

127TH STREET EAST

SCALE: 1"=40'
0 20 40 80

RIPRAP POINTS				
POINT #	STATION/OFFSET	NORTHING	EASTING	REMARKS
1	13+77.00/62.50' L	1694937.64	1691538.97	
2	14+11.74/59.52' L	1694972.43	1691541.20	
3	14+17.10/30.50' L	1694978.42	1691570.09	
4	13+77.00/30.50' L	1694938.33	1691570.96	
5	15+21.43/39.75' R	1695084.27	1691638.04	
6	15+52.93/39.75' R	1695115.76	1691637.36	
7	15+49.43/77.75' R	1695113.09	1691675.42	
8	15+17.43/77.75' R	1695081.09	1691676.12	
9	23+38.01/32.00' L	1695899.08	1691548.49	
10	23+38.01/50.00' L	1695898.69	1691530.50	

RIPRAP POINTS				
POINT #	STATION/OFFSET	NORTHING	EASTING	REMARKS
11	23+60.00/50.00' L	1695920.67	1691530.02	
12	23+81.93/87.99' L	1695941.77	1691491.56	
13	24+67.35/87.99' L	1696027.17	1691489.69	
14	24+56.06/53.91' L	1696016.63	1691524.01	
15	24+56.06/32.00' L	1696017.10	1691545.92	
16	23+67.91/25.61' R	1695930.24	1691605.43	
17	23+87.38/26.83' R	1695949.73	1691606.23	
18	24+05.58/37.34' R	1695968.15	1691616.34	
19	23+90.55/50.70' R	1695953.42	1691630.03	
20	23+83.40/53.51' R	1695946.32	1691632.99	

RIPRAP POINTS				
POINT #	STATION/OFFSET	NORTHING	EASTING	REMARKS
21	23+67.04/39.58' R	1695929.66	1691619.42	
22	24+56.47/25.00' R	1696018.76	1691602.89	
23	24+71.47/25.00' R	1696033.76	1691602.57	
24	24+71.47/45.00' R	1696034.20	1691622.56	
25	24+56.47/45.00' R	1696019.20	1691622.89	

DESIGNATED AREAS SHALL RECIEVE A DETENTION POND SEED MIX AND FERTILIZER AS FOLLOWS:

SMOOTH BROME	*75LB/ACRE PLS*
K-31 FESCUE	*300LB/ACRE PLS*
ANNUAL RYE	*100LB/ACRE PLS*
FERTILIZER (10-20-10)	*350LB/ACRE*

LEGEND

- BUFFALO SOD
- STANDARD SEED AREAS
- SOD, MATCH EXISTING TYPE
- RIPRAP
- STREAM CHANNEL SEED AREAS AND TURF REINFORCEMENT MAT. SEE SH. NO. 126

MKEC
Wichita, KS • 316-684-9600

STREET IMPROVEMENTS FOR

127TH STREET EAST

FROM 13TH STREET NORTH TO 21ST STREET NORTH

©2017
MKEC Engineering
All Rights Reserved
www.mkec.com
These drawings and their contents, including, but not limited to, all concepts, designs, & ideas are the exclusive property of MKEC Engineering (MKEC), and may not be used or reproduced in any way without the express consent of MKEC.

ROADSIDE IMPROVEMENT PLAN (1)

PROJECT NO.	472-85158
DATE	11/29/17
SCALE	AS SHOWN

DESIGNED	DRAWN	CHECKED
JRA	LES	JRA

NO.	REVISION	DATE

SHEET NO.

122 OF 183

J:\PROJECTS\2014\1401040260 - COW_127TH E 13TH TO 21ST\05-CIVIL\CAD\ROAD IMPROV\1426R001.DWG

PLOTTED: Wednesday, November 29, 2017 @ 03:25PM

STATE	PROJECT NO.	YEAR	SHEET NO.	TOTAL SHEETS
KANSAS	87 N-0615-01	2017	123	183

MKEC
Wichita, KS • 316-684-9600

127TH STREET EAST

STREET IMPROVEMENTS FOR
FROM 13TH STREET NORTH TO 21ST STREET NORTH

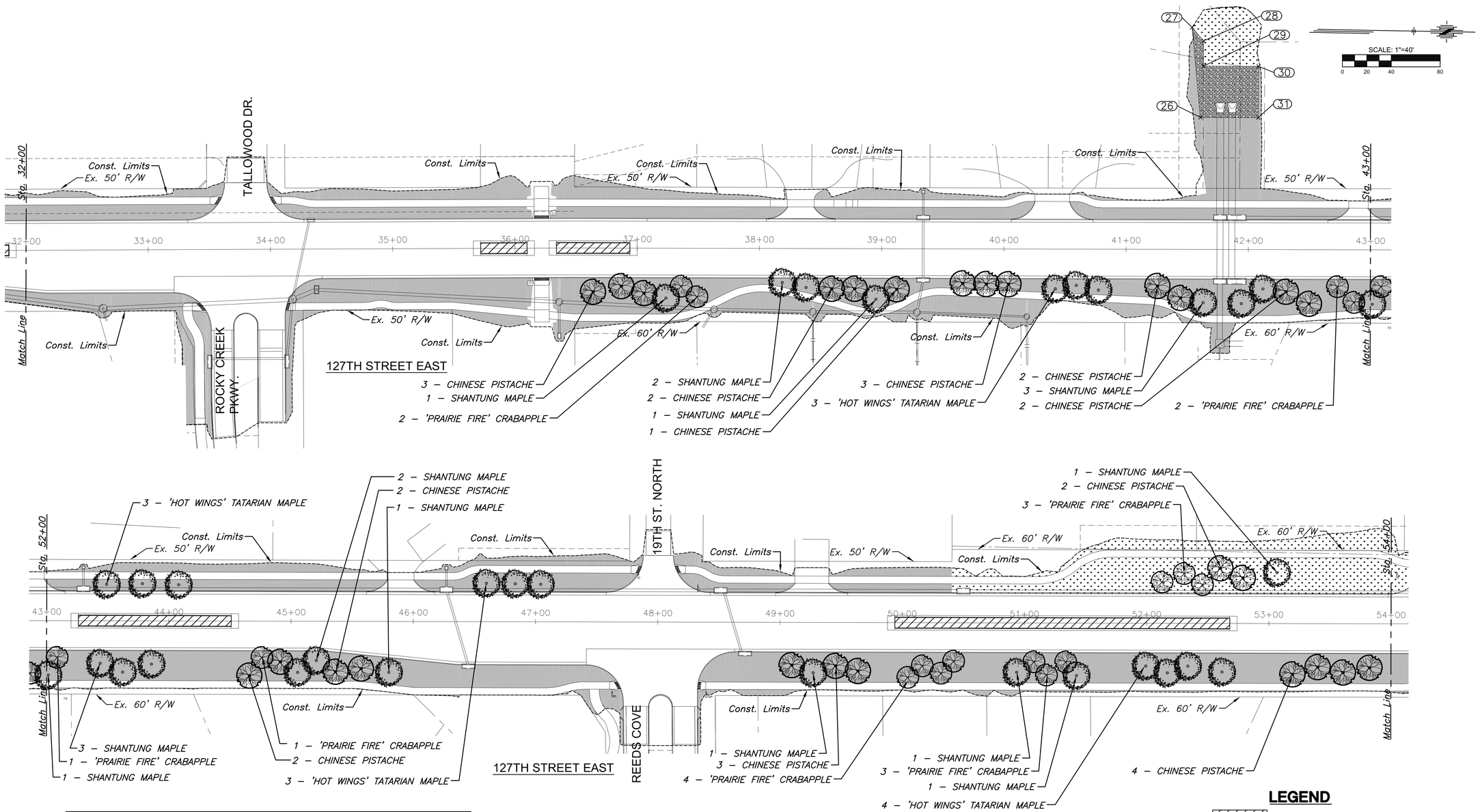

RIPRAP POINTS				
POINT #	STATION/OFFSET	NORTHING	EASTING	REMARKS
26	41+60.47/108.03' L	1697720.25	1691436.20	
27	41+53.61/181.69' L	1697712.29	1691362.65	
28	41+63.04/170.71' L	1697721.88	1691373.48	
29	41+63.04/150.05' L	1697722.19	1691394.15	
30	42+08.04/150.00' L	1697767.18	1691393.52	
31	42+07.88/107.97' L	1697767.66	1691435.55	

DESIGNATED AREAS SHALL RECIEVE A DETENTION POND SEED MIX AND FERTILIZER AS FOLLOWS:

SMOOTH BROME	*75LB/ACRE PLS*
K-31 FESCUE	*300LB/ACRE PLS*
ANNUAL RYE	*100LB/ACRE PLS*
FERTILIZER (10-20-10)	*350LB/ACRE*

LEGEND

- BUFFALO SOD
- STANDARD SEED AREAS
- SOD, MATCH EXISTING TYPE
- RIPRAP
- STREAM CHANNEL SEED AREAS AND TURF REINFORCEMENT MAT. SEE SH. NO. 126

©2017
MKEC Engineering
All Rights Reserved
www.mkec.com
These drawings and their contents, including, but not limited to, all concepts, designs, & ideas are the exclusive property of MKEC Engineering (MKEC), and may not be used or reproduced in any way without the express consent of MKEC

ROADSIDE IMPROVEMENT PLAN (2)

PROJECT NO.	472-85158
DATE	11/29/17
SCALE	AS SHOWN

DESIGNED	DRAWN	CHECKED
JRA	LES	JRA

NO.	REVISION	DATE

SHEET NO.

123 OF 183

Sh. No. 123

J:\PROJECTS\2014\1401940299 - COW_127TH E 13TH TO 21ST\05-CIVIL\CAD\ROAD IMPROV\1429GR02.DWG

PLOTTED: Wednesday, November 29, 2017 @ 03:28PM

STATE	PROJECT NO.	YEAR	SHEET NO.	TOTAL SHEETS
KANSAS	87 N-0615-01	2017	124	183

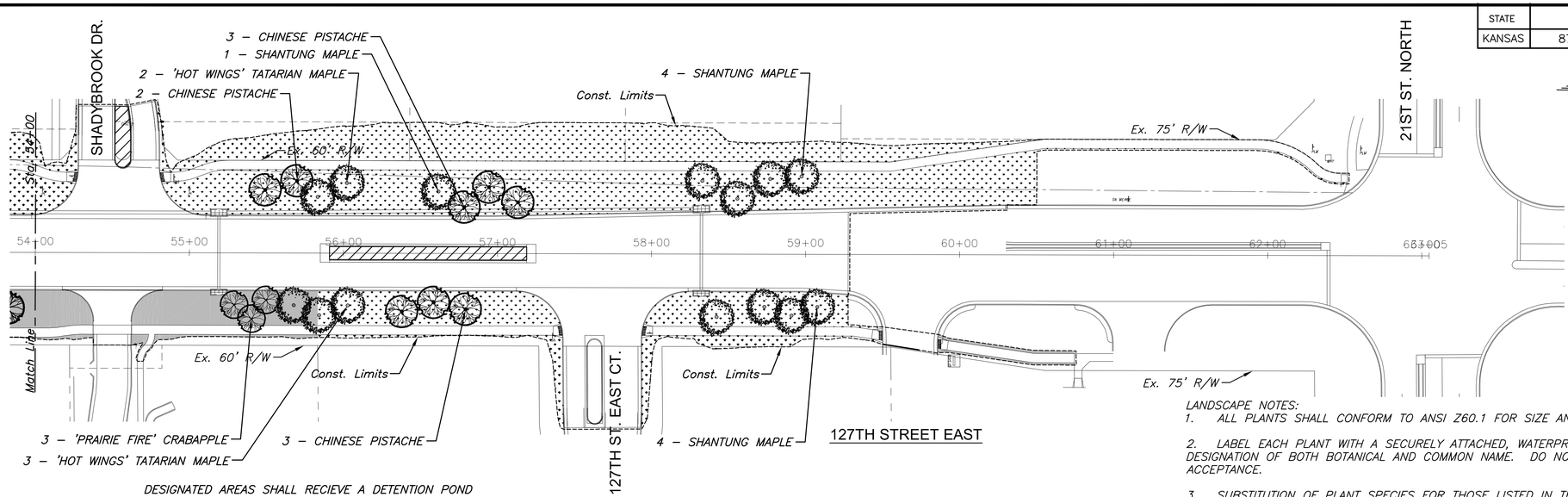

SCALE: 1"=40'
0 20 40 80

DESIGNATED AREAS SHALL RECIEVE A DETENTION POND SEED MIX AND FERTILIZER AS FOLLOWS:

SMOOTH BROME	75LB/ACRE PLS
K-31 FESCUE	300LB/ACRE PLS
ANNUAL RYE	100LB/ACRE PLS
FERTILIZER (10-20-10)	350LB/ACRE

PLANT SCHEDULE

QTY	COMMON NAME	BOTANICAL NAME	SIZE & METHOD OF HANDLING	NOTES
DECIDUOUS SHADE TREES				
34	CHINESE PISTACHE	PISTACIA CHINENSIS	3" CAL. / B&B	MALE TREES ONLY
31	SHANTUNG MAPLE	ACER TRUNCATUM	2.5" CAL. / B&B	
19	'PRAIRIE FIRE' CRABAPPLE	MALUS SP 'PRAIRIE FIRE'	2" CAL. / B&B	
24	'HOT WINGS' TATARIAN MAPLE	ACER TATARICUM 'HOT WINGS'	2.5" CAL. / B&B	

NOTES:
BALL OF PLANT TO BE KEPT MOIST AND PROTECTED FROM DAMAGE PRIOR TO PLANTING. ADD ROOT STIMULATOR TO SURFACE IMMEDIATELY AFTER PLANTING AS PER THE MANUFACTURER'S RECOMMENDATIONS. PLANTING DEPTH SHALL BE DETERMINED BY SETTING THE ROOT FLARE 1"–2" ABOVE FINISHED GRADE. DO NOT ASSUME ROOT FLARE IS AT TOP OF ROOTBALL. DO NOT OVERTIGHTEN GUYS.

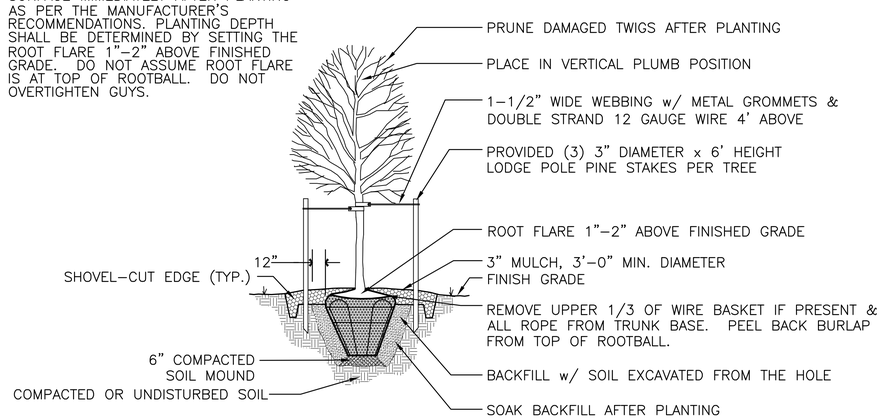

TREE PLANTING DETAIL
NOT TO SCALE

LANDSCAPE NOTES:
1. ALL PLANTS SHALL CONFORM TO ANSI Z60.1 FOR SIZE AND QUALITY STANDARDS.

2. LABEL EACH PLANT WITH A SECURELY ATTACHED, WATERPROOF TAG BEARING LEGIBLE DESIGNATION OF BOTH BOTANICAL AND COMMON NAME. DO NOT REMOVE UNTIL AFTER PROVISIONAL ACCEPTANCE.

3. SUBSTITUTION OF PLANT SPECIES FOR THOSE LISTED IN THE PLANT LIST IS NOT PERMISSIBLE. ONLY SIZE WILL BE CONSIDERED.

4. ALL PLANTS MUST BE HEALTHY, VIGOROUS MATERIAL; FREE OF PEST AND DISEASES. ALL PLANTS MUST BE CONTAINER-GROWN OR BALLED AND BURLAPPED AS INDICATED IN THE PLANT LIST. ALL TREES SHALL BE STRAIGHT-TRUNKED, OR OF TYPICAL FORM TO THE SPECIES, FULL-HEADED AND MEET THE REQUIREMENTS AS SPECIFIED. ALL TREES MUST BE STAKED.

5. STAKES AND GUYING SHALL BE REMOVED AT THE END OF ONE FULL GROWING SEASON.

6. ALL LANDSCAPE PLANTS SHALL BE GUARANTEED FOR ONE YEAR FOLLOWING INITIAL ACCEPTANCE. DEAD OR DEFICIENT PLANTINGS SHALL BE ACCEPTABLY REPLACED, IN PROPER PLANTING SEASON, ONE TIME AT NO COST TO THE OWNER. SOD AND SEED AREAS MAY BE FINAL ACCEPTED AT TIME OF COMPLETION OF ESTABLISHMENT, (SEE NOTES ABOVE), WITH NO FURTHER GUARANTEE REQUIRED.

7. THE LOCATIONS OF TREES TO BE PLANTED ARE APPROXIMATE. CONTRACTOR SHALL ENSURE TREES ARE NOT PLANTED OVER UTILITIES OR OTHER BURIED OBSTRUCTIONS.

TREE PRESERVATION:
EXISTING TREES TO BE SAVED ARE AN IMPORTANT ASSET TO THIS PROJECT. PRESERVE EACH TREE NOT NOTED FOR REMOVAL AS DIRECTED IN THESE PLANS & NOTES.

EQUIPMENT AND CONSTRUCTION MATERIALS SHALL REMAIN OUT OF AND AWAY FROM TREE DRIPLINES SO AS TO NOT COMPACT THE ROOT ZONE OR DAMAGE THE TREE. CHEMICAL SPILL DAMAGE SHALL BE PREVENTED BY FILLING GAS TANKS, CLEANING TOOLS & REPAIRING EQUIPMENT WELL OUTSIDE TREE PROTECTED ROOT ZONES. CONCRETE MORTAR SHALL BE MIXED ON A THICK PLASTIC TARP. MIXING TRUCKS SHALL BE RINSED OUT OFF SITE. WHERE IT OCCURS THAT A CONSTRUCTION ROUTE OR A PROPOSED IMPROVEMENT OCCURS WITHIN A TREES (PRZ) IT MAY BE NECESSARY DEPENDENT UPON THE TYPE OF CONSTRUCTION AND EQUIPMENT USED, TO INSTALL A ROOT PROTECTION BRIDGE (I.E. 24" LAYER OF WOOD MULCH) OR APPROVED EQUIVALENT, THIS MAY BE DETERMINED IN THE FIELD AT THE DIRECTION OF THE LANDSCAPE ARCHITECT.

ANY TREE THAT MUST HAVE BRANCHES REMOVED SHALL BE TRIMMED WITH SHARP INSTRUMENT/TOOL THAT IS INTENDED FOR SUCH OPERATIONS. CONSULT LANDSCAPE ARCHITECT PRIOR TO TRIMMING. KNOCKING BRANCHES OFF WITH A BACK HOE OR OTHER SIMILAR MACHINE IS NOT ACCEPTABLE! REFER TO TREE TRIMMING DETAIL ON THIS SHEET FOR TRIMMING PROCEDURE.

WHERE ROOT CUTTING IS NECESSARY ON TREES WHICH ARE TO REMAIN, THE ROOTS SHALL BE VERTICALLY CUT WITH A SHARP INSTRUMENT OR TRENCHER PRIOR TO EXCAVATING SOIL AROUND TO ROOTS.

ROADSIDE IMPROVEMENTS SUMMARY (FOR INFORMATION ONLY)

PROJECT PORTION	AREA (S.Y.)
PROJECT TOTAL STANDARD SEED	6,311.2
PROJECT TOTAL BUFFALO SOD	1,595.9
PROJECT TOTAL SOD (NON BUFFALO)	15,010.9
PROJECT TOTAL STREAM SEED MIX	3,193.2
PROJECT TOTAL TURF REINFORCEMENT MAT	3,193.2
PROJECT TOTAL RIP-RAP, LIGHT STONE	1,219.3

LEGEND

- BUFFALO SOD
- STANDARD SEED AREAS
- SOD, MATCH EXISTING TYPE
- RIPRAP
- STREAM CHANNEL SEED AREAS AND TURF REINFORCEMENT MAT. SEE SH. NO. 126

MKEC
Wichita, KS • 316-684-9600

STREET IMPROVEMENTS FOR

127TH STREET EAST

FROM 13TH STREET NORTH TO 21ST STREET NORTH

©2017
MKEC Engineering
All Rights Reserved
www.mkec.com
These drawings and their contents, including, but not limited to, all concepts, designs, & ideas are the exclusive property of MKEC Engineering (MKEC), and may not be used or reproduced in any way without the express consent of MKEC.

ROADSIDE IMPROVEMENT PLAN (3)

PROJECT NO.	472-85158
DATE	11/29/17
SCALE	AS SHOWN

DESIGNED	DRAWN	CHECKED
JRA	LES	JRA

NO.	REVISION	DATE

SHEET NO.
124 OF 183

Sh. No. 124

J:\PROJECTS\2014\1401040260 - COW_ 127TH E 13TH TO 21ST\05-CIVIL\CAD\ROAD IMPROV\1426RR03.DWG

PLOTTED: Wednesday, November 29, 2017 @ 03:27PM

STATE	PROJECT NO.	YEAR	SHEET NO.	TOTAL SHEETS
KANSAS	87 N-0615-01	2017	125	183

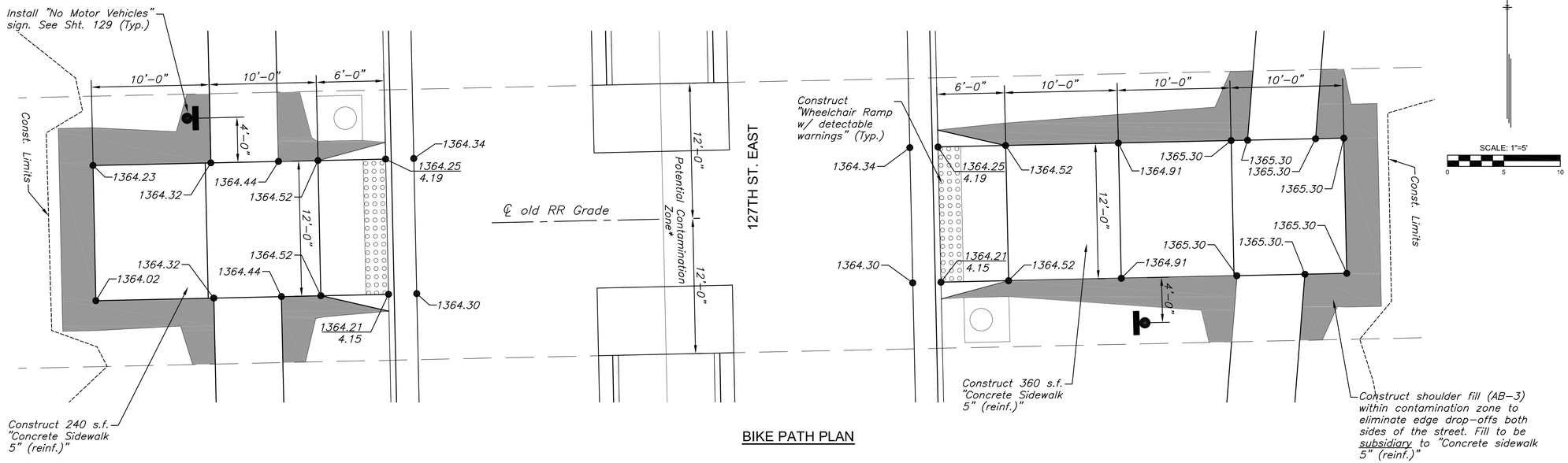

BIKE PATH PLAN

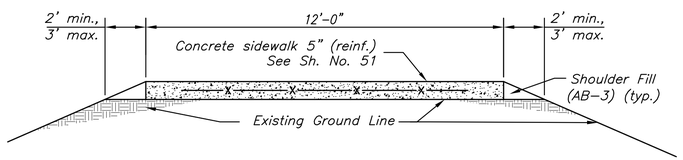

SECTION

PATH BASE
When the path and walk are over the Existing Railroad Embankment, the base shall be the existing Rail Bed Aggregate Material. Base grading and manipulation shall be SUBSIDIARY to the concrete path. The aggregate base shall be compacted and smoothed with a steel faced roller prior to placement of the pavement.

BACKFILL
Backfill shall be clean, uncontaminated topsoil. No material originating from the Railroad Embankment shall be used for backfill and must be disposed of in approved manner.

SHOULDER
Contractor to install new shoulder material. New shoulder material shall be AB-3 or approved equal. Shoulder to be rolled for compaction and smoothness. Shoulder material, placement and compaction to be SUBSIDIARY to other items of work.

GENERAL NOTES

WORKING WITH CONTAMINATED SOILS

1. Contractor shall take precaution in grading material off of surface in abandoned RR right-of-way. Disturbance of rock ballast could release contaminants into the environment and expose workers to contaminated soil (namely lead and arsenic). It is recommended that any necessary digging be done while wearing gloves and breathing apparatus. The extent of potentially contaminated soil is limited to a 24 foot wide strip centered about the center of the old rail which is now the center of the proposed Red Bud trail (Sta. 36+21.86). The area of roadway cut through this strip is 95.0 square feet which translates to a volume of 84.5 cubic yards.

2. The contractor must employ/contract a Professional Engineer/Geologist that understands and is able to manage special and hazardous waste found in soils (high levels of lead and arsenic). It is believed that the top 2 feet of most of former rail bed is contaminated. The contractors' environmental team will be responsible for profiling the soils during the excavation of the soils, segregating the soils if desired, and assisting with the selection of the appropriate method of disposal for contaminated soils. The environmental team must also provide a soils management plan and safe handling plan for the City and the contractor's staff; the plan must outline the approach to project, safety measures for staff and public during excavation, safety equipment needed, methods of decontamination of equipment, control of dust, and containment and protection of potential contaminated soils while profiling and awaiting disposal. The Contractor's environmentalist's soils management plan and the safety plan shall be submitted to Shawn Maloney with Environmental Services at 268-8351 who will submit it for approval by KDHE.

3. Control dust by using engineering controls that reduce the exposure of the workers to permissible exposure limits (PEL) of 0 micrograms of lead per cubic meter of air as specified by OSHA. It is recommended that someone within the Contractor's company have HAZWOPER training to advices workers of situations that they may uncover.

4. The Contractor shall adhere to the National Oil and Hazardous Substances Pollution Contingency Plan (40 CFR 300).

5. The soils within the abandoned railroad track bedding are assumed to all be a special waste classification and not hazardous waste. If soil tests reveal hazardous waste soils, the additional costs of contending with such waste (above the cost of special waste handling and treatment) will be covered with a change order. The bid item "Excavation, Special" is to cover all costs for soil removal and treatment of special waste soil within the abandoned railroad corridor (including for installation of the road, storm sewer, and other work in said area).

MKEC
Wichita, KS • 316-684-9600

STREET IMPROVEMENTS FOR

127TH STREET EAST

FROM 13TH STREET NORTH TO 21ST STREET NORTH

©2017
MKEC Engineering
All Rights Reserved
www.mkec.com
These drawings and their contents, including, but not limited to, all concepts, designs, & ideas are the exclusive property of MKEC Engineering (MKEC), and may not be used or reproduced in any way without the express consent of MKEC.

ROADSIDE IMPROVEMENT DETAILS

PROJECT NO.	472-85158
DATE	11/29/17
SCALE	1"=5'

DESIGNED	DRAWN	CHECKED
JRA	LES	JRA

NO.	REVISION	DATE

SHEET NO.

125 OF 183

Sh. No. 125

J:\PROJECTS\2014\1401040299 - COW_127TH E 13TH TO 21ST\05-CIVIL\CAD\ROAD IMPROV\14299RD01.DWG

PLOTTED: Wednesday, November 29, 2017 @ 03:27PM

STATE	PROJECT NO.	YEAR	SHEET NO.	TOTAL SHEETS
KANSAS	87 N-0615-01	2017	126	183

INSTALLATION DETAILS ON SLOPES

Material shall be laid loosely in the direction of the slope, beginning at the bottom of the slope. In order for the blanket to be in contact with the soil, lay the blanket loosely, avoiding stretching.

1. Install product in accordance with the manufacturers recommendations.

2. ANCHOR SLOTS: The top of the blanket should be "slotted in" at the top of the slope and anchored in place with anchors 6 inches apart. The slots should be 6 inches wide x 6 inches deep with the blanket anchored in the bottom of the slot, then backfilled, tamped and seeded.

3. LONGITUDINAL SEAMS: The edges of the blanket should overlap each other a minimum of 6 inches, with anchors catching the edges of both blankets.

4. SPLICE SEAM: When splices are necessary, overlap end a minimum of 6 inches in direction of water flow. Stagger splice seams.

5. CHECK SLOTS: Establish check slots transverse to slope every 30 feet. The slots should be 6 inches wide x 6 inches deep. The blanket shall be cut to a length 6 inches beyond the slot. The top of the downslope blanket shall be slotted in, anchored and buried, tamped and seeded similar to the top anchor slot. The upslope blanket shall then cover the slot and be anchored as shown.

6. TERMINAL FOLD: The bottom edge of the blanket shall be turned under a minimum of 4 inches, then anchored in place with anchors 9 inches apart.

7. TYPICAL ANCHORS: Anchor design shall be as recommended by the manufacturer.

GENERAL NOTES

1. *This sheet applies to the installation of erosion control blankets and turf reinforcement mats.*
2. *As noted on sheet 2, erosion control blankets shall be installed on all seeded surfaces. Surfaces to receive stream channel seed mix shall receive turf reinforcement mat in place of erosion control mat.*
3. *All mat shall be installed in accordance with the details on this sheet and with the manufacturer's instructions. If contradictions exist between the two are Manufacturer's instructions will take precedence over the information on this sheet.*
4. *Turf reinforcement mat shall be 100% biodegradable (not just photodegradable), shall be rated for a minimum of 2 lb. per sq. ft. shear stress with up to a 24 month protection life. Suitable mats include North American Green model BioNet C125BN, American Excelsior model AEC Premier Straw/Coconut FibreNet, and Western Excelsior model Excel CS-3 All Natural.*
5. *All material and installation costs for erosion control mat is subsidiary to "Seeding". All material and installation costs for turf reinforcement mat shall be paid for as "Turf Reinforcement Mat". Seeding and surface preparation below turf reinforcement mat shall be subsidiary to "Seeding".*

INSTALLATION DETAILS IN CHANNELS

Material shall be laid loosely in the direction of the flow, with the first course at the centerline of channel, where applicable. In order for the mat to be in contact with the soil, lay the mat loosely, avoiding stretching.

1. Install product in accordance with manufacturers recommendations.

2. ANCHOR FOLD: The top of the mat should be folded under, buried and secured with wood or other approved anchors placed 6 inches apart. The top edge of the mat should be buried in a slot, 6 inches x 6 inches deep; anchored in the bottom of the slot, backfilled and the mat folded over the top as shown in detail.

3. LONGITUDINAL SEAMS: The adjacent edges of the mat should overlap a minimum of 6 inches, with anchors catching the edges of both mats.

4. SPLICE SEAM: When splices are necessary, overlap end a minimum of 12 inches in direction of water flow. Stagger splice seams.

5. CHECK SLOTS: Establish check slots transverse to slope every 30 feet. The slots should be 6 inches wide x 6 inches deep. T he mat shall be cut to a length 12 inches beyond the slot. The top of the downstream mat shall be slotted in, secured and buried similar to the edge anchor fold. The upstream mat shall then cover the slot and be anchored as shown.

6. EDGE ANCHOR: Lay outside edge of mat into trench at top of side slope. Anchor at 3 foot intervals along trench.

7. TERMINUS: The bottom edge of the mat shall be anchored in place with anchors spread at 9 inch intervals along the terminating edge.

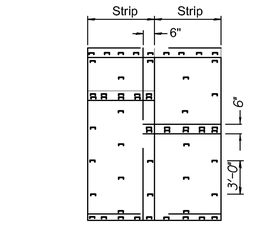

PLAN VIEW - ANCHORING DIAGRAM

INSTALLATION ON SLOPES

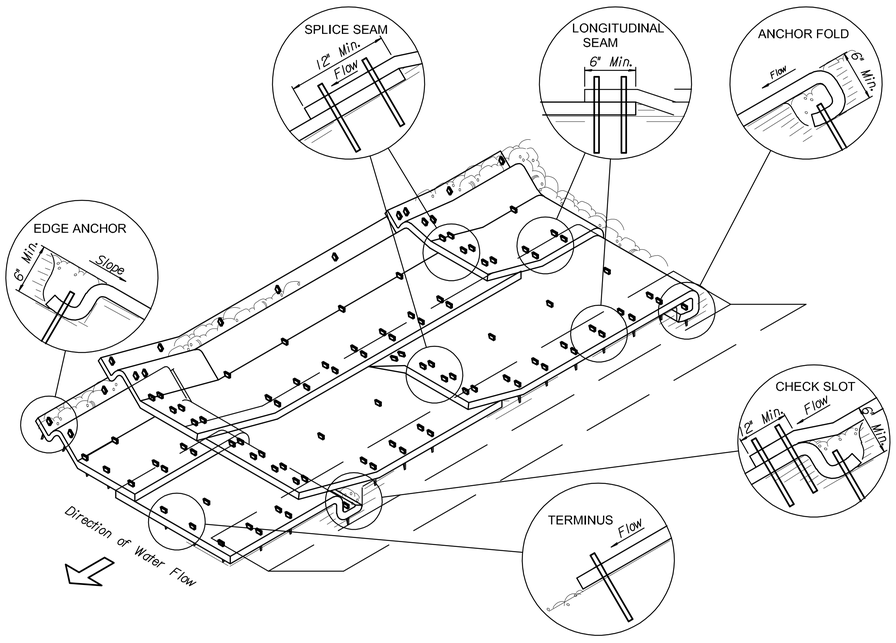

INSTALLATION IN CHANNELS

MKEC
Wichita, KS • 316-684-9600

STREET IMPROVEMENTS FOR

127TH STREET EAST

FROM 13TH STREET NORTH TO 21ST STREET NORTH

©2016
MKEC Engineering
All Rights Reserved
www.mkec.com
These drawings and their contents, including, but not limited to, all concepts, designs, & ideas are the exclusive property of MKEC Engineering (MKEC) and may not be used or reproduced in any way without the express consent of MKEC.

FLEXIBLE DITCH LINING & SLOPE PROTECTION

PROJECT NO.	472-85158
DATE	11/29/17
SCALE	AS SHOWN

DESIGNED	DRAWN	CHECKED
JRA	DM	JRA

NO.	REVISION	DATE

SHEET NO.

126 OF 183

J:\PROJECTS\2013\4\140194029\ - COW_127TH E 13TH TO 21ST\05-CIVIL\CAD\EROSION\14290-DITCH SLOPE DTL.DWG

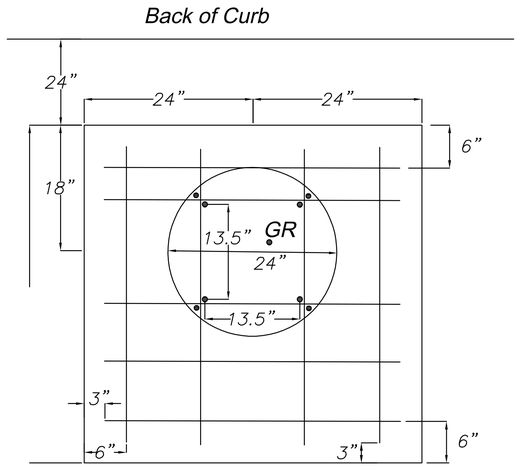

Bolt Circle 13.5" on Center

#6 Rebar 42" x 9 pcs.

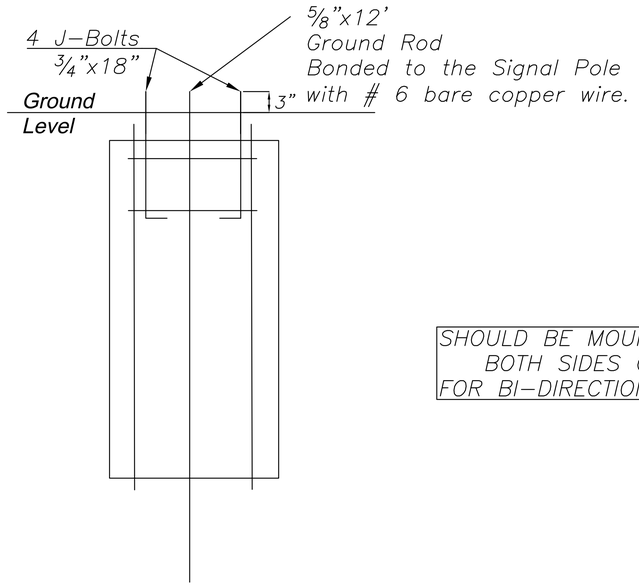

#6 Rebar 60" x 4 pcs.

#4 Rebar Cross bars weld or wire.

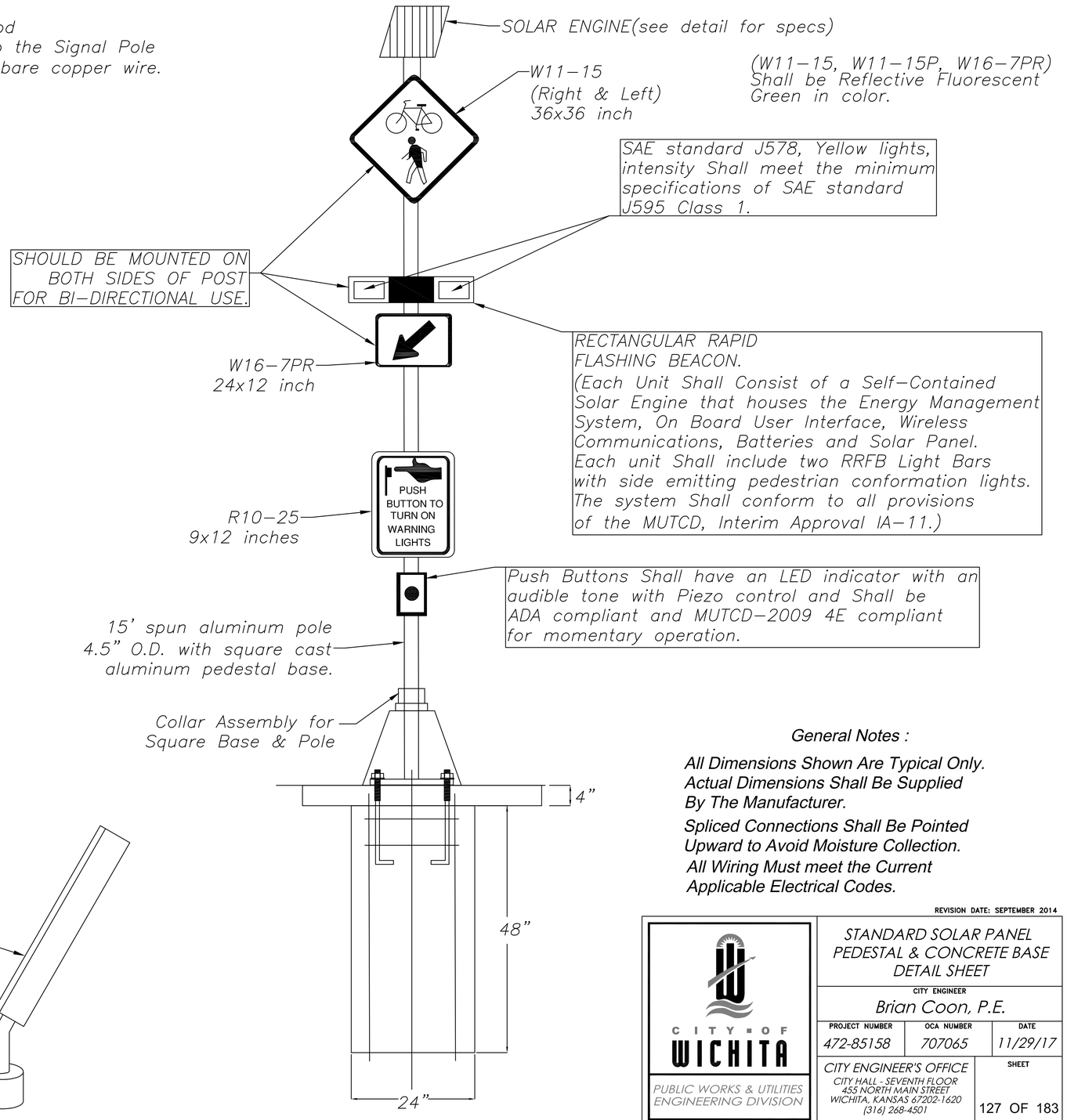

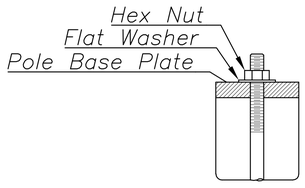

Use Keystone "No-Weld Number 1 Anti-Seize Compound" on all bolts & nuts.

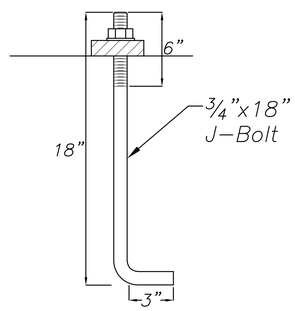

SOLAR PANEL & ENGINE :
(1)10 watt solar panel no larger than the footprint of the housing with hinged top to access the user interface & batteries.
(2)–7Ah sealed valve regulated lead acid batteries with quick connectors to facilitate faster installation (non–propietary & readily available from multiple suppliers)
Batteries Shall not need to be charged by a battery charger prior to installation.
Solar panel and system Shall be 12 volt DC.

General Notes :

All Dimensions Shown Are Typical Only. Actual Dimensions Shall Be Supplied By The Manufacturer.

Spliced Connections Shall Be Pointed Upward to Avoid Moisture Collection.

All Wiring Must meet the Current Applicable Electrical Codes.

REVISION DATE: SEPTEMBER 2014

CITY OF WICHITA
PUBLIC WORKS & UTILITIES
ENGINEERING DIVISION

STANDARD SOLAR PANEL PEDESTAL & CONCRETE BASE DETAIL SHEET

CITY ENGINEER
Brian Coon, P.E.

PROJECT NUMBER	OCA NUMBER	DATE
472-85158	707065	11/29/17

CITY ENGINEER'S OFFICE
CITY HALL - SEVENTH FLOOR
455 NORTH MAIN STREET
WICHITA, KANSAS 67202-1620
(316) 268-4501

SHEET
127 OF 183

TR-113
Sh. No. 127

Saved 05-11-2017 1:22:59 PM by JACOBSW
Plot Scale 1:1 11-29-2017 3:27:47 PM by DEBRA MASON
J:\Projects\2014\1401040290 - COW_127th E 13th to 21st\05-Civil\CAD\Std\TR-113

J:\Projects\2014\1401040290 - COW_127th E 13th to 21st\05-Civil\CAD\Std\TR-113.dwg

PLOTTED: Wednesday, November 29, 2017 @ 03:28PM

STATE	PROJECT NO.	YEAR	SHEET NO.	TOTAL SHEETS
KANSAS	87 N-0615-01	2017	128	183

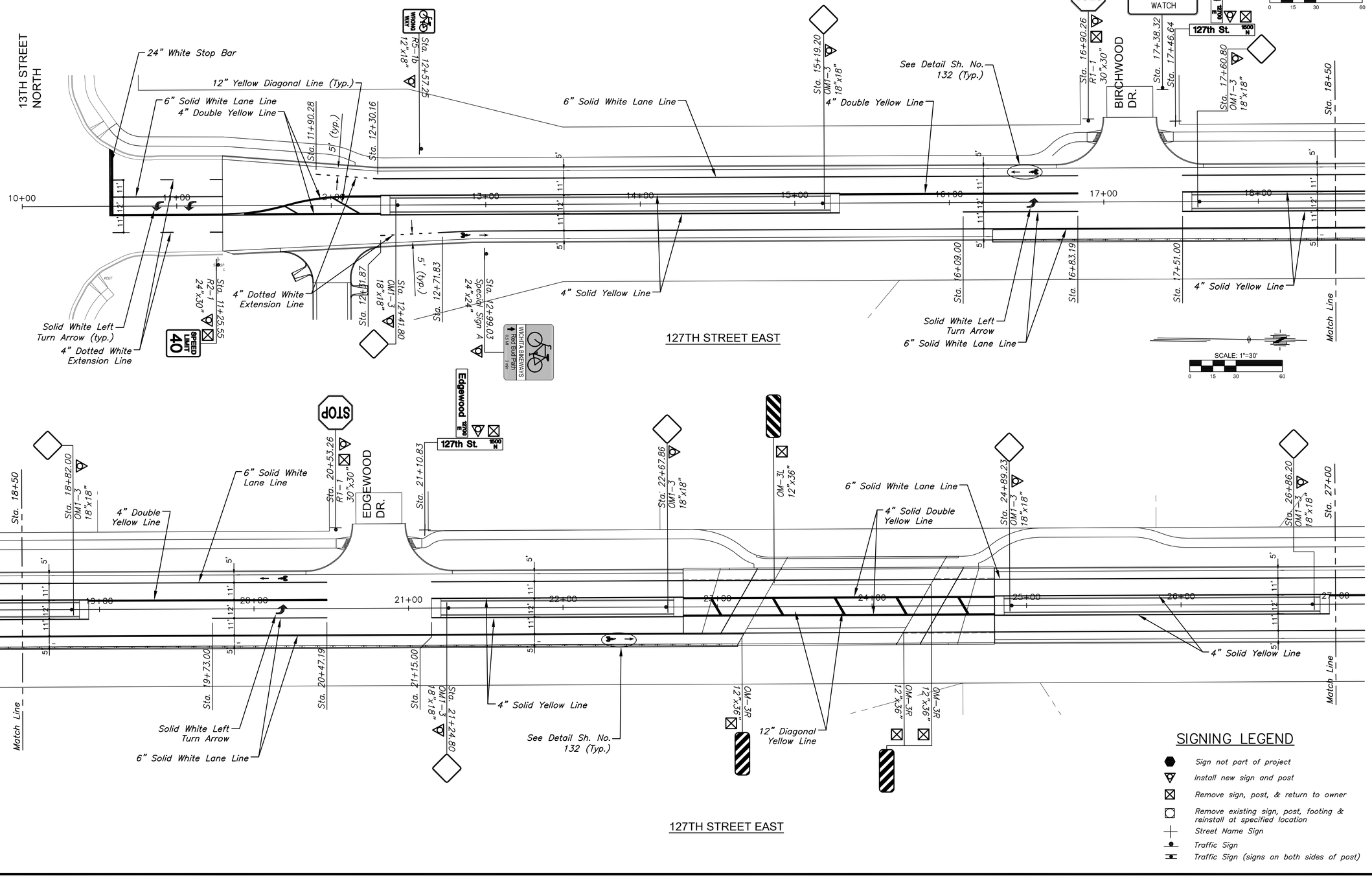

SIGNING LEGEND

- Sign not part of project
- Install new sign and post
- Remove sign, post, & return to owner
- Remove existing sign, post, footing & reinstall at specified location
- Street Name Sign
- Traffic Sign
- Traffic Sign (signs on both sides of post)

MKEC
Wichita, KS • 316-684-9600

STREET IMPROVEMENTS FOR

127TH STREET EAST

FROM 13TH STREET NORTH TO 21ST STREET NORTH

©2017
MKEC Engineering
All Rights Reserved
www.mkec.com
These drawings and their contents, including, but not limited to, all concepts, designs, & ideas are the exclusive property of MKEC Engineering (MKEC), and may not be used or reproduced in any way without the express consent of MKEC.

PAVEMENT MARKING AND SIGNING PLAN

PROJECT NO.	472-85158
DATE	11/29/17
SCALE	1"=30'

DESIGNED	DRAWN	CHECKED
JRA	WNJ	JRA

NO.	REVISION	DATE

SHEET NO.

128 OF 183

Sh. No. 128

J:\PROJECTS\2014\1401040290 - COW_ 127TH E 13TH TO 21ST\05-CIVIL\CAD\PAV\14290EM01.DWG

STATE	PROJECT NO.	YEAR	SHEET NO.	TOTAL SHEETS
KANSAS	87 N-0615-01	2017	129	183

MKEC
Wichita, KS • 316-684-9600

STREET IMPROVEMENTS FOR

127TH STREET EAST

FROM 13TH STREET NORTH TO 21ST STREET NORTH

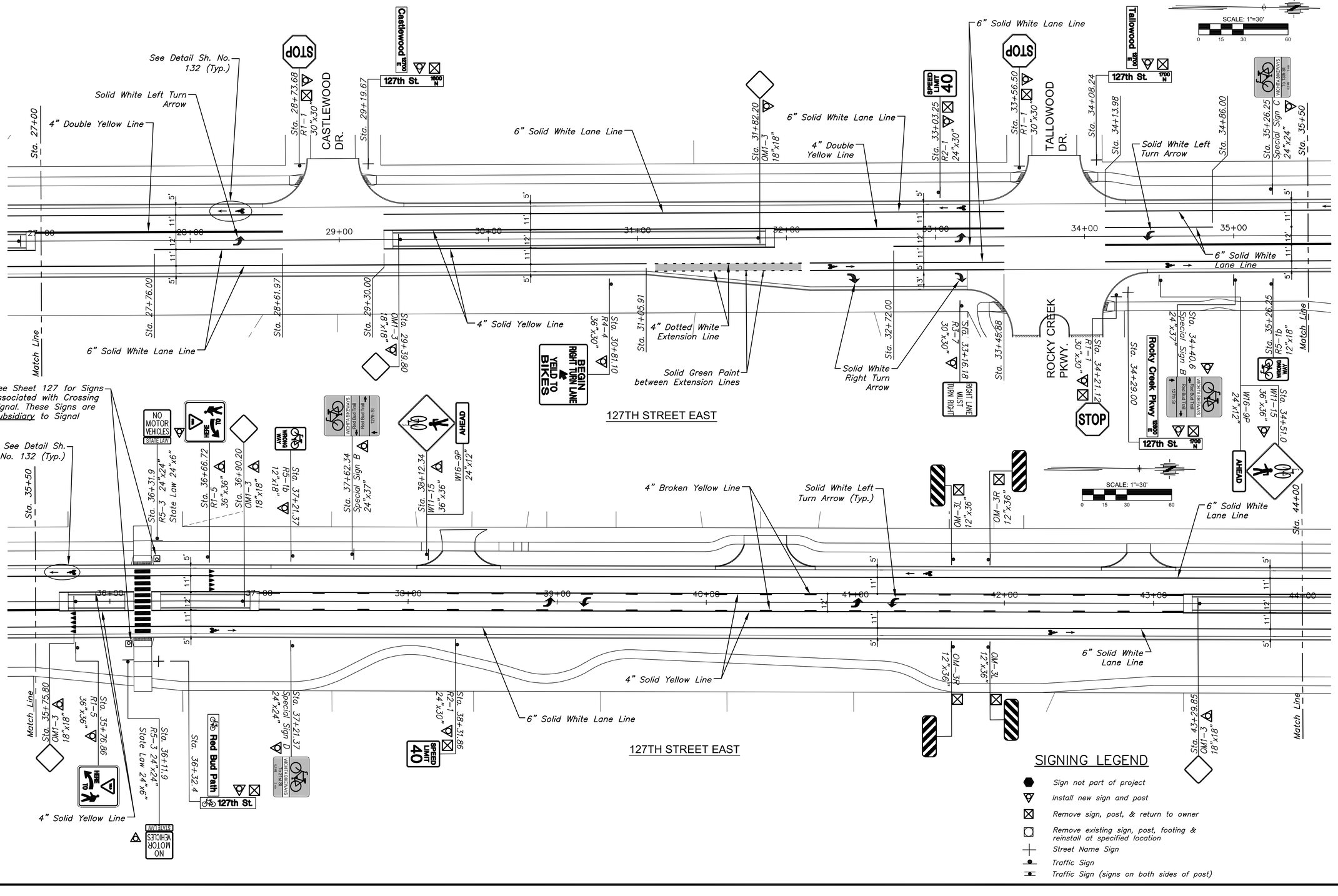

©2017
MKEC Engineering
All Rights Reserved
www.mkec.com
These drawings and their contents, including, but not limited to, all concepts, designs, & ideas are the exclusive property of MKEC Engineering (MKEC), and may not be used or reproduced in any way without the express consent of MKEC.

PAVEMENT MARKING AND SIGNING PLAN

PROJECT NO.	472-85158
DATE	11/29/17
SCALE	1"=40'

DESIGNED	DRAWN	CHECKED
JRA	WNJ	JRA

NO.	REVISION	DATE

SHEET NO.

129 OF 183

Sh. No. 129

PLOTTED: Wednesday, November 29, 2017 @ 03:29PM
J:\PROJECTS\2014\1401040290 - CON_127TH E 13TH TO 21ST\05-CIVIL\CAD\PAVY-1429(EM02.DWG

PLOTTED: Wednesday, November 29, 2017 @ 03:29PM

STATE	PROJECT NO.	YEAR	SHEET NO.	TOTAL SHEETS
KANSAS	87 N-0615-01	2017	130	183

MKEC
Wichita, KS • 316-684-9600

SCALE: 1"=30'
0 15 30 60

127TH STREET EAST

STREET IMPROVEMENTS FOR
FROM 13TH STREET NORTH TO 21ST STREET NORTH

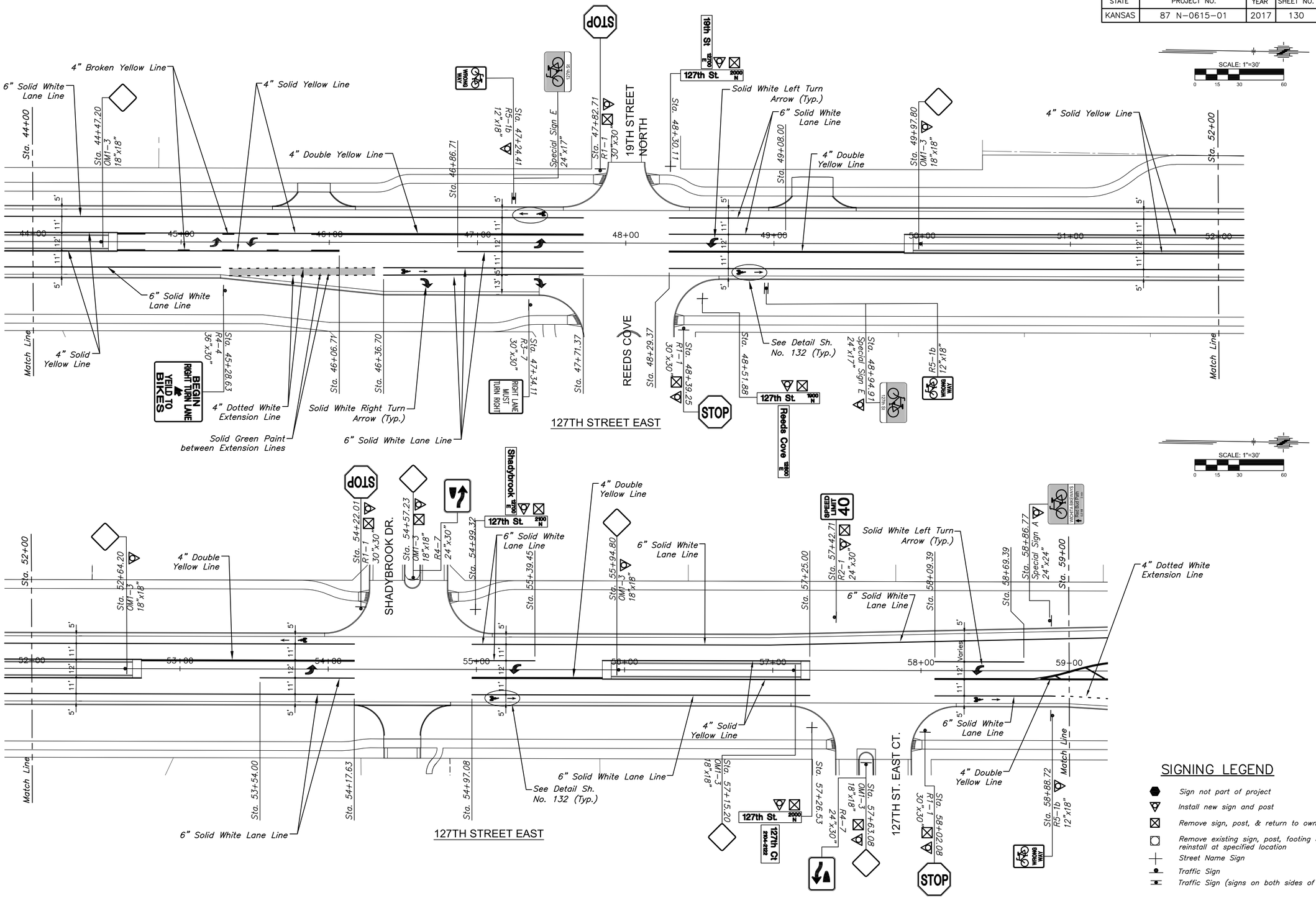

SIGNING LEGEND

- Sign not part of project
- Install new sign and post
- Remove sign, post, & return to owner
- Remove existing sign, post, footing & reinstall at specified location
- Street Name Sign
- Traffic Sign
- Traffic Sign (signs on both sides of post)

©2017
MKEC Engineering
All Rights Reserved
www.mkec.com
These drawings and their contents, including, but not limited to, all concepts, designs, & ideas are the exclusive property of MKEC Engineering (MKEC), and may not be used or reproduced in any way without the express consent of MKEC.

PAVEMENT MARKING AND SIGNING PLAN

PROJECT NO.	472-85158
DATE	11/29/17
SCALE	1"=40'

DESIGNED	DRAWN	CHECKED
JRA	WNJ	JRA

NO.	REVISION	DATE

SHEET NO.
130 OF 183

Sh. No. 130

J:\PROJECTS\2013\140194299 - COW_127TH E 13TH TO 21ST\05-CIVIL\CAD\PAV\1429EEM03.DWG

PLOTTED: Wednesday, November 29, 2017 @ 03:30PM

STATE	PROJECT NO.	YEAR	SHEET NO.	TOTAL SHEETS
KANSAS	87 N-0615-01	2017	131	183

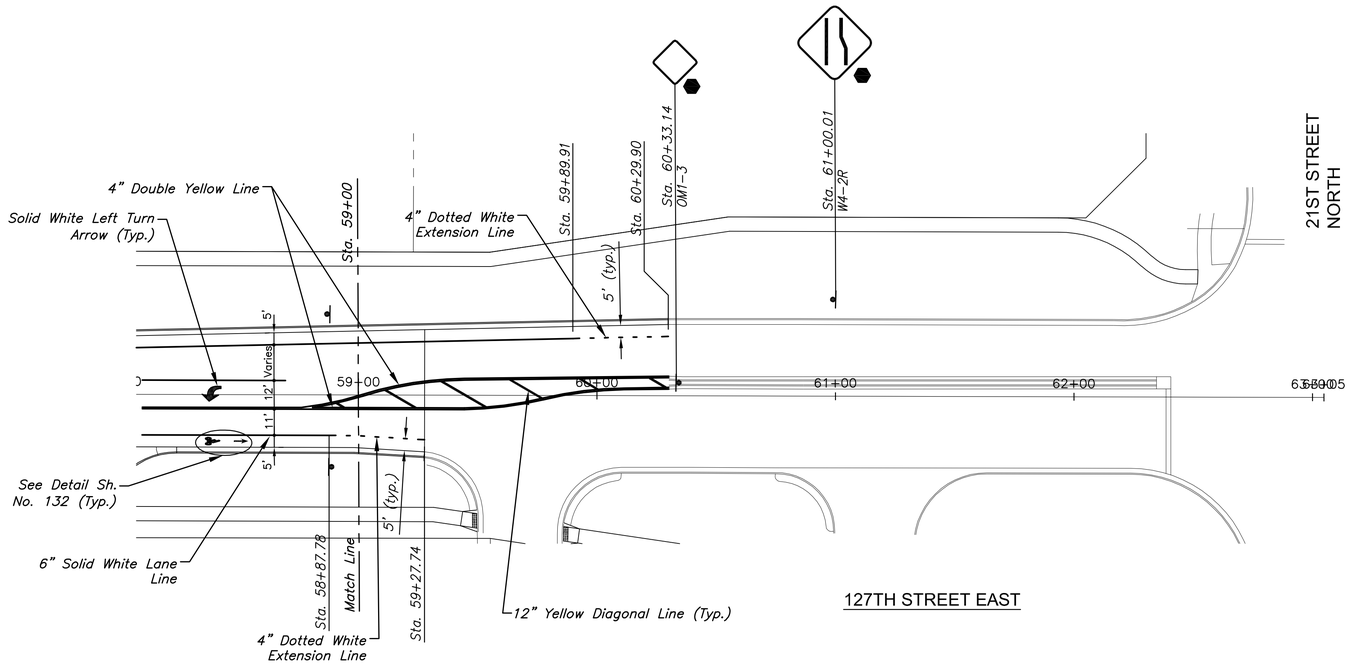

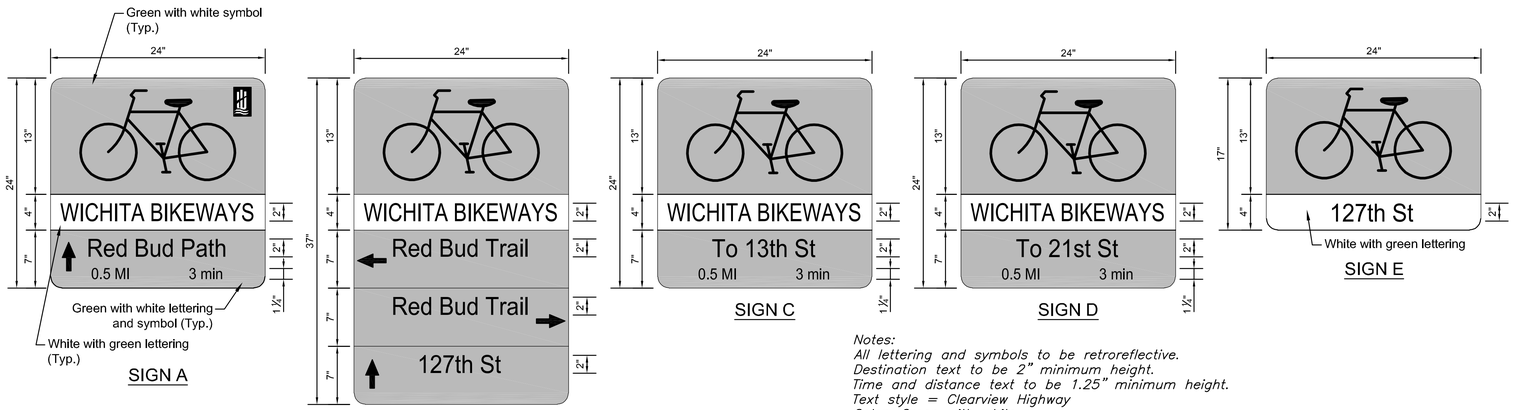

Notes:
All lettering and symbols to be retroreflective.
Destination text to be 2" minimum height.
Time and distance text to be 1.25" minimum height.
Text style = Clearview Highway
Color: Green with white.
All special signs shall conform to the "Wichita Bicycle Wayfinding System Plan".

SPECIAL SIGNS

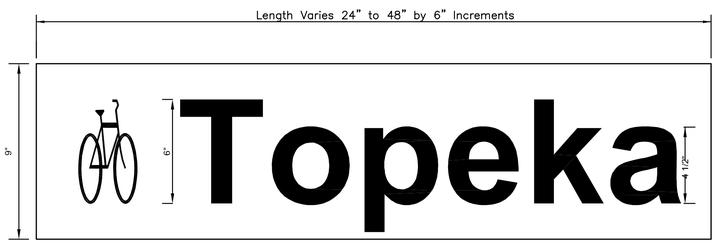

DETAIL A
9" BIKE

See sheet 133 for sign details.

STREET NAME	NO. BLADES REQ'D 9" BIKE
Red Bud Path	1
127th St	1

SIGNING LEGEND

- Sign not part of project
- Install new sign and post
- Remove sign, post, & return to owner
- Remove existing sign, post, footing & reinstall at specified location
- Street Name Sign
- Traffic Sign
- Traffic Sign (signs on both sides of post)

Pavement Markings – All pavement markings shall be epoxy, unless otherwise approved by the Engineer. Pavement markings shall be installed per manufacturer's recommendations and shall meet KDOT's 2007 Edition of the Standard Specification Section 806. Full traffic may not be restored (and substantial project completion achieved) until all pavement markings are in place. Should construction timing be such that restoration of traffic becomes necessary during temperatures prohibiting the installation of permanent markings, the contractor shall install and maintain temporary markings until such time that permanent markings may be properly installed. Except for the material requirement, temporary pavement markings shall be placed equivalent, in every manner (i.e. dimension, frequency, spacing, etc.), to the permanent marking layout. The cost for temporary pavement markings will not be paid for directly, but shall be considered subsidiary to the bid item "Traffic Control".

SUMMARY OF QUANTITIES (FOR INFORMATION ONLY)

ITEMS	QUANTITY	UNIT
Pavement Marking (White) (4")	697	L.F.
Pavement Marking (Yellow) (4")	10,720	L.F.
Pavement Marking (White) (6")	9,741	L.F.
Pavement Marking (Yellow) (12")	165	L.F.
Pavement Marking (White) (24")	153	L.F.
Pavement Marking Symbol (Left Turn)	19	Each
Pavement Marking Symbol (Right Turn)	4	Each
Bike Lane Marking	18	Each
SNS Bike	2	Each
Green Paint Pavement Marking (Green)	490	S.F.
Pavement Marking Symbol (Yield)	10	Each

Notes:
All Special Signs are subsidiary to "Signing, Except Street Name Signs".
All bike SNSs are subsidiary to "Signing, Street Name Signs Only".

RECAPITULATION OF QUANTITIES

BID ITEM	QUANTITY	UNIT
Pavement Marking	Lump Sum	L.S.

SCALE: 1"=30'
0 15 30 60

MKEC
Wichita, KS • 316-684-9600

STREET IMPROVEMENTS FOR

127TH STREET EAST

FROM 13TH STREET NORTH TO 21ST STREET NORTH

©2017
MKEC Engineering
All Rights Reserved
www.mkec.com
These drawings and their contents, including, but not limited to, all concepts, designs, & ideas are the exclusive property of MKEC Engineering (MKEC), and may not be used or reproduced in any way without the express consent of MKEC.

PAVEMENT MARKING AND SIGNING PLAN

PROJECT NO.	472-85158
DATE	11/29/17
SCALE	AS SHOWN

DESIGNED	DRAWN	CHECKED
JRA	DM	JRA

NO.	REVISION	DATE

SHEET NO.
131 OF 183

Sh. No. 131

J:\PROJECTS\2014\140104\260 - COW_ 127TH E 13TH TO 21ST\05-CIVIL\CAD\PAV\14296EM04.DWG

PLOTTED: Wednesday, November 29, 2017 @ 03:30PM

STATE	PROJECT NO.	YEAR	SHEET NO.	TOTAL SHEETS
KANSAS	87 N-0615-01	2017	132	183

MKEC
Wichita, KS • 316-684-9600

STREET IMPROVEMENTS FOR

127TH STREET EAST

FROM 13TH STREET NORTH TO 21ST STREET NORTH

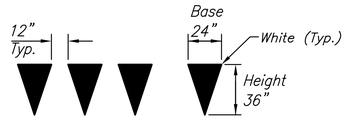

YEILD LINE DETAILS
NOT TO SCALE

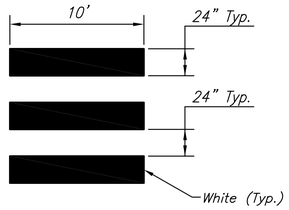

HIGH VISIBILITY CROSSWALK LINE (BARS) DETAILS
NOT TO SCALE

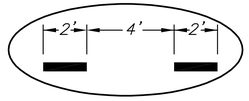

TYPICAL SPACING
FOR 4" DOTTED WHITE EXTENSION LINE

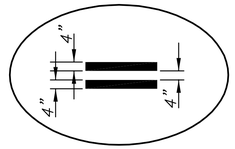

TYPICAL SPACING FOR 4" DOUBLE YELLOW LINE

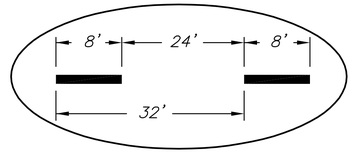

TYPICAL SPACING
FOR 6" BROKEN WHITE LANE LINES
AND 4" BROKEN YELLOW LINES

NOTE: Bike Path Sign Placement is Typical. Location may be Adjusted to avoid Conflicts with Utilities, Signs, or other Objects. Symbols to be White.

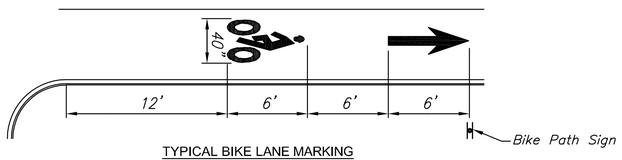

TYPICAL BIKE LANE MARKING

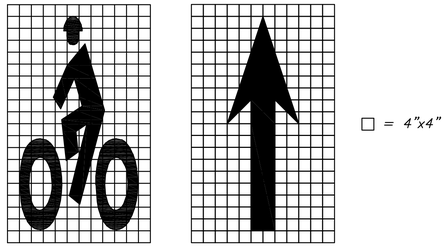

□ = 4"x4"

BIKE SYMBOL DIRECTIONAL ARROW

TYPICAL BIKE LANE SYMBOLS

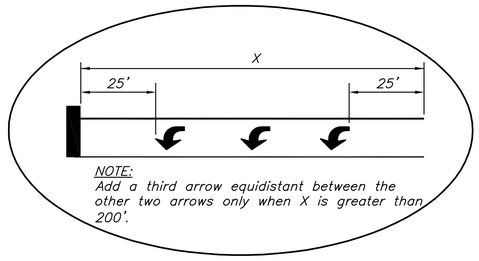

NOTE:
Add a third arrow equidistant between the other two arrows only when X is greater than 200'.

ARROW SPACING DETAIL

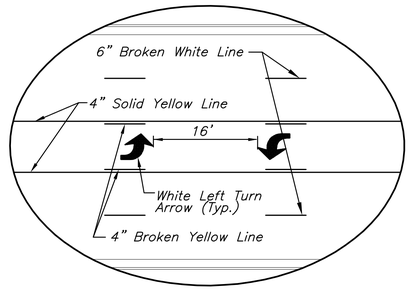

TWO WAY LEFT TURN DETAIL

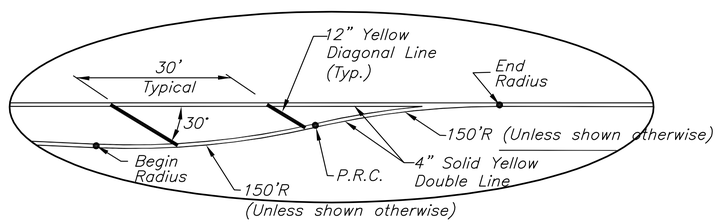

TYPICAL APPROACH TAPER DETAIL

©2017
MKEC Engineering
All Rights Reserved
www.mkec.com
These drawings and their contents, including, but not limited to, all concepts, designs, & ideas are the exclusive property of MKEC Engineering (MKEC), and may not be used or reproduced in any way without the express consent of MKEC.

PAVEMENT MARKING DETAILS

PROJECT NO.	472-85158
DATE	11/29/17
SCALE	NTS

DESIGNED	DRAWN	CHECKED
JRA	BKS	JRA

NO.	REVISION	DATE

SHEET NO.

132 OF 183

J:\PROJECTS\2014\140104\290 - COV_ 127TH E 13TH TO 21ST\05-CIVIL\CAD\PAV\14290EM05.DWG

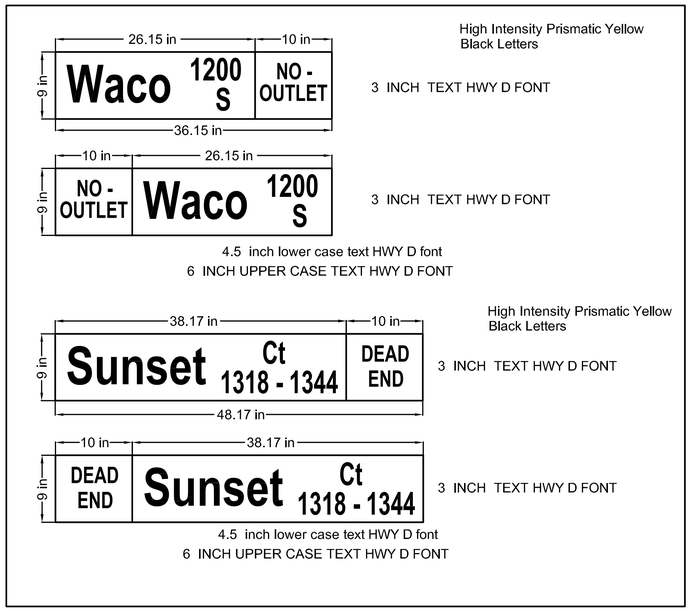

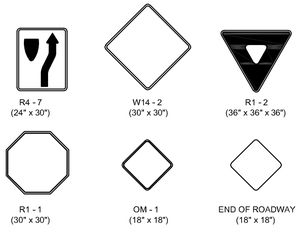

* IN NO CASE SHALL THE SPECIFICATIONS BE LESS THAN REQUIRED BY THE CURRENT MUTCD.

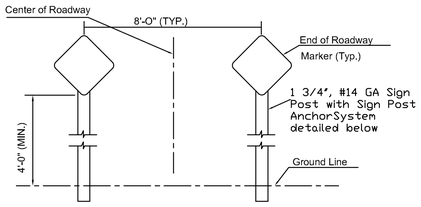

TYPICAL END OF ROADWAY SIGN MOUNTING INSTALLATION

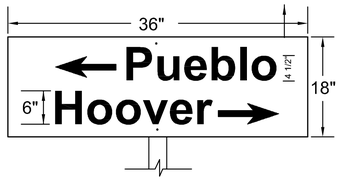

FLAT PLATE STREET NAME SIGN

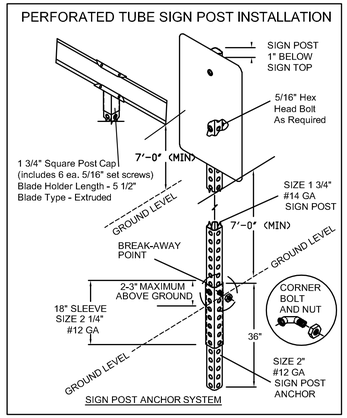

DETAIL A
9" STANDARD

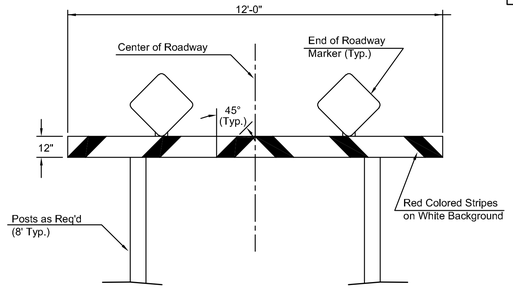

TYPE I BARRICADE DETAIL W/ E.O.R. MARKERS

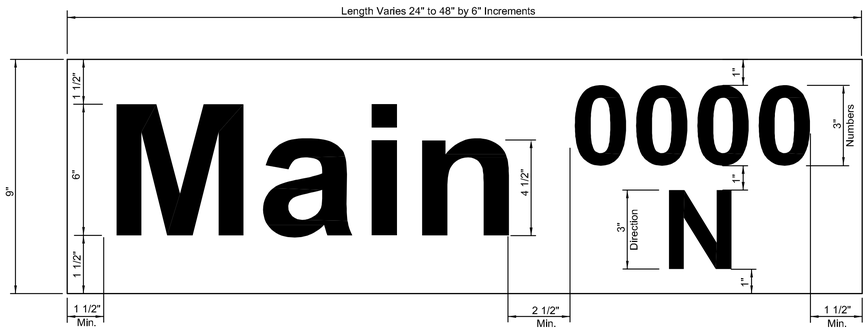

DETAIL B
9" METRO

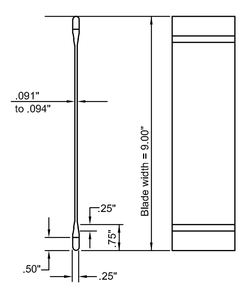

STREET NAME SIGN
BLADE DETAILS

STREET NAME	NO. BLADES REQ'D	
	9" STD.	9" METRO
127th St 1500 N		2
127th St 1600 N		1
127th St 1700 N		2
127th St 1900 N		1
127th St 2000 N		2
127th St 2100 N		1
Birchwood 12700 E		1
Edgewood 12700 E		1
Castlwood 12700 E		1
Tallowood 12700 E		1
Rocky Creeek Pkwy 12800 E		1
19th St 12700 E		1
Reeds Cove 12800 E		1
Shadybrook 12700 E		1
127th Ct 2104-2122		1

SIGN ASSEMBLY TABLE

STATION	OFFSET	SIGN	QUANTITY*
16+90.26	54.0' L	R1-1	1
20+53.26	51.0' L	R1-1	1
28+73.68	51.0' L	R1-1	1
33+56.50	48.0' L	R1-1	1
34+21.12	41.0' R	R1-1	1
47+82.71	50.0' L	R1-1	1
48+39.25	58.0' R	R1-1	1
54+22.01	42.0' L	R1-1	1
58+02.08	41.0' R	R1-1	1
			9
11+25.55	38.0' R	R2-1	1
33+03.25	30.0' L	R2-1	1
38+31.86	30.0' L	R2-1	1
57+42.71	36.0' L	R2-1	1
			4
33+16.18	46.0' R	R3-7	1
47+34.11	41.0' R	R3-7	1
			2
30+81.10	30.0' R	R4-4	1
45+26.63	31.0' R	R4-4	1
			2
36+11.9	40.5' R	R5-3	1
36+31.9	42.0' L	R5-3	1
			2
12+57.25	37.0' L	R5-1b	1
35+26.25	31.0' R	R5-1b	1
37+21.37	30.0' L	R5-1b	1
47+24.41	30.0' L	R5-1b	1
48+94.91	30.0' R	R5-1b	1
58+88.72	31.0' R	R5-1b	1
			6
12+99.03	32.0' R	SIGN A	1
58+86.77	36.0' L	SIGN A	1
			2
34+40.6	31.0' R	SIGN B	1
37+62.34	31.0' L	SIGN B	1
			2
35+26.25	31.0' R	SIGN C	1
			1
37+21.37	30.0' R	SIGN D	1
			1
47+24.41	30.0' L	SIGN E	1
48+94.91	30.0' R	SIGN E	1
			2
12+41.80	0.0'	OM1-3	1
15+19.20	0.0'	OM1-3	1
17+60.80	0.0'	OM1-3	1
18+82.00	0.0'	OM1-3	1
21+24.80	0.0'	OM1-3	1
22+67.86	0.0'	OM1-3	1
24+89.23	0.0'	OM1-3	1
26+86.20	0.0'	OM1-3	1
29+39.80	0.0'	OM1-3	1
31+82.20	0.0'	OM1-3	1
35+75.80	0.0'	OM1-3	1
36+90.20	0.0'	OM1-3	1
43+29.85	0.0'	OM1-3	1
44+47.20	0.0'	OM1-3	1
49+97.80	0.0'	OM1-3	1
52+64.20	0.0'	OM1-3	1
54+57.23	60.0' L	OM1-3	1
55+94.80	0.0'	OM1-3	1
57+15.20	0.0'	OM1-3	1
57+63.08	62.0' R	OM1-3	1
			20
34+51.0	31.0' R	W11-15	1
38+12.34	31.0' L	W11-15	1
			2
34+51.0	44.0' L	W16-9p	1
38+12.34	31.0' R	W16-9p	1
			2
54+57.23	30.0' L	R4-7	1
57+63.08	62.0' R	R4-7	1
			2
35+76.86	30.0' R	R1-5	1
36+66.72	30.0' L	R1-5	1
			2
36+11.9	40.5' R	STATE LAW	1
36+31.9	42.0' L	STATE LAW	1
			2
TOTAL			63

NOTE: REFERENCES BELOW TO "STANDARD SPECIFICATIONS" DENOTE "STANDARD SPECIFICATION FOR STATE ROAD AND BRIDGE CONSTRUCTION EDITION 1990" BY THE KANSAS DEPARTMENT OF TRANSPORTATION.

1. ***FABRICATION AND INSTALLATION OF ALL SIGNS SHALL CONFORM TO THE LATEST EDITION OF THE MUTCD.***

1a. POST ANCHORS: POSTS SHALL BE ANCHORED WITH A YIELDING BASE POST SUPPORT AS DETAILED.

2. POSTS FOR TRAFFIC CONTROL SIGNS: POSTS SHALL BE GALVANIZED AND CONFORM TO THE REQUIREMENTS OF SUBSECTION 1620 OF THE STANDARD SPECIFICATIONS, EXCEPT THAT ALL POSTS SHALL WEIGH 3 LBS./FT. MINIMUM.

3. POSTS FOR STREET NAME SIGNS (SNS): POSTS SHALL BE 9 FEET LONG, CONSTRUCTED FROM #14 GALVANIZED STEEL PIPE AND SHALL BE 1 3/4" SQUARE WEIGHING A MINIMUM OF 3 LBS/FT. POSTS SHALL BE POSITIONED SO THAT THE BOTTOM BLADE IS 7 FEET ABOVE GRADE.

4. POSTS FOR END OF ROADWAY SIGN TO BE 8' LONG AND INSTALLED A MINIMUM OF 4' FROM ROADWAY TO BOTTOM OF SIGN.

5. SIGN BLANKS FOR TRAFFIC CONTROL SIGNS: SIGN BLANKS SHALL BE FABRICATED FROM 0.080" ALUMINUM ALLOY 6063-T6 CONFORMING TO THE REQUIREMENTS OF SUBSECTION 1626 OF THE STANDARD SPECIFICATIONS.

6. SIGN BLADES FOR STREET NAME SIGNS: EXTRUDED ALUMINUM BLADES SHALL BE ALUMINUM ALLOY CONFORMING TO 6063-T6 OR 5052-H38 (ASTM SPECIFICATION B221, LATEST ISSUE). BLADES SHALL HAVE AN ALODINE OR PHOSPHATE ETCHED FINISH. BLADES SHALL HAVE SQUARE CORNERS AND NO HOLES.

MINIMUM BLADE LENGTH SHALL BE 24", MAXIMUM BLADE LENGTH SHALL BE 48". LENGTH VARIES BY INCREMENTS OF 6".

BLADES BEARING THE STREET NAMES SHALL BE FIRMLY ATTACHED TO THE MOUNTING BRACKETS USING ALLEN-TYPE CONICAL SET SCREWS. THE BLADES SHALL BE ORIENTED PARALLEL TO THE STREET.

7. MOUNTING BRACKETS FOR SIGNS: DIE-CAST ALUMINUM BRACKETS SHALL BE ALUMINUM ALLOY 360 HAVING A TENSILE STRENGTH OF 44,000 PSI. THE BRACKETS SHALL BE SMOOTHLY FINISHED FREE OF PITS, BURRS, AND FLAWS. EACH BRACKET SHALL BE TAPPED AND DRILLED FOR 5/16" ZINC-PLATED ALLEN-TYPE SET SCREWS HAVING SELF-LOCKING SAW-TOOTH ENDS.

8. FASTENERS: ALL STEEL FASTENERS FOR TRAFFIC CONTROL SIGNS SHALL BE GALVANIZED AND SHALL CONFORM TO THE REQUIREMENTS OF SUBSECTION 1614 OF THE STANDARD SPECIFICATIONS.

9. REFLECTIVE SHEETING: REFLECTIVE SHEETING SHALL BE A MINIMUM OF HIGH INTENSITY PRISMATIC.

10. PROCESS INK: ALL PROCESS INK SHALL CONFORM TO THE REQUIREMENTS OF SUBSECTION 2202 OF THE STANDARD SPECIFICATIONS.

11. DETAILS - SNS: THE REFLECTIVE SHEETING FOR THE 9" STANDARD SIZE SNS IS TO BE THE HIGHWAY GREEN BACKGOUND WITH SILVER-WHITE #2 COPY WITH 6" UPPER CASE AND 4 1/2" LOWER CASE PRIMARY COPY AND SUFFIX COPY. BOTH SERIES "C", FACES TO TRIM TO A 8 1/2". (SEE DETAIL A.)

THE REFLECTIVE SHEETING FOR THE 9" METRO SIZE SNS IS TO BE THE HIGHWAY GREEN BACKGROUND WITH SILVERWHITE #2 COPY WITH 6" UPPER CASE AND 4 1/2" LOWER CASE PRIMARY COPY AND SUFFIX COPY, BOTH SERIES "C". THE CARDINAL DIRECTION CENTERED DIRECTLY BELOW THE BLOCK NUMBER SHALL BE AN UPPER CASE, 3" SERIES "C" LETTER. FACES TO TRIM TO A 8 1/2" WIDTH. (SEE DETAIL B.)

FOR CUL-DE-SAC STREETS, A 9" METRO SIZE BLADE SHALL BE USED WITH THE BLOCK NUMBERS DISPLAYED BENEATH THE STREET NAME.

IF BLOCK NUMBERS ARE NOT SHOWN ON THE PLANS THE CONTRACTOR SHALL CONTACT THE TRAFFIC ENGINEER AT 268-4501 PRIOR TO MANUFACTURING THE SIGN.

SHOP DRAWINGS OF LAYOUT FOR SNS SHALL BE SUBMITTED TO THE TRAFFIC ENGINEERING DIVISION OF THE CITY OF WICHITA FOR APPROVAL PRIOR TO FABRICATION. THE FINISHED SIGNS AS SUPPLIED SHALL BE OF GOOD APPEARANCE, FREE FROM RAGGED EDGES, CRACKS SCALES OR BLISTERS AND SHALL BE CLEAN-CUT. SIGNS SHALL BE PACKED IN SUCH MANNER AS TO PREVENT DAMAGE OR DEFACEMENT DURING SHIPMENT OR STORAGE.

12. PERMANENT TRAFFIC CONTROL AND SNS: PERMANENT TRAFFIC CONTROL AND SNS SHALL BE MEASURED AND PAID FOR AT THE LUMP SUM PRICE FOR SIGNING. THE PAYMENT AS SET FORTH ABOVE SHALL BE CONSIDERED FULL COMPENSATION FOR ALL EXCAVATION, BACKFILLING, POSTS, ANCHORS, FASTENERS, MATERIALS, LABOR, TOOLS AND INCIDENTALS NECESSARY TO COMPLETE THIS WORK.

REVISED NOVEMBER 2014

CITY OF WICHITA
PUBLIC WORKS & UTILITIES
ENGINEERING DIVISION

SIGN DETAILS

TRAFFIC ENGINEER
Brian A. Coon P.E.

PROJECT NUMBER	OCA NUMBER	DATE
472-85158	707065	

CITY ENGINEER'S OFFICE
CITY HALL - SEVENTH FLOOR
455 NORTH MAIN STREET
WICHITA, KANSAS 67202-1620
(316) 268-4501

SHEET
133 OF 183

J:\PROJECTS\2014\1401040290 - COW_127TH E 13TH TO 21ST\05-CIVIL\CAD\TRAF\14290TR106.DWG

J:\Projects\2014\1401040290 - COW_127th E 13th to 21st\05-Civil\CAD\Traf\14290TR106.dwg

TR-106

PLOTTED: Wednesday, November 29, 2017 @ 05:28PM

PHASING	HANDLING OF TRAFFIC	MAJOR CONSTRUCTION ITEMS	REMARKS
1	Maintain two-lane two-directional traffic on 127th Street. Provide localized traffic control near and around construction work zones as required. Installation of storm sewer lines shall be made under normal traffic conditions utilizing flagger control.	Construct water line improvements. Construct segment of SWS Lines 7 and 13 that cross 127th Street. Construct temporary pavement widening south of Birchwood Street.	Refer to the typical traffic control plans for work along and near the edge of roadway and for work within the roadway. Both plans are shown on sheet 145 of the plans.
2A	Provide a single lane of Northbound traffic on 127th Street in the west lane of the existing roadway from the south end of the project to approximately station 16+20. Transition traffic from west lane to east lane of the existing roadway between stations 16+20 and 19+20. Provide a single lane of Northbound traffic in the east lane of the existing roadway from station 19+20 to the north end of the project. Erect detour signing for Southbound 127th Street traffic between 21st Street and 13th Street. Access to and from 127th to Castlewood Drive or Tallowood Drive shall be maintained at all time. Both approaches shall not be closed at any time.	Construct the proposed improvements on the west half of the project from approximately station 19+20 to the north end of the project including storm sewers, entrances and side-road aproaches, sidewalk and bridge widening. Construct the remaining portions of SWS Lines 7 and 13. Construct portions of SWS Line 1 as allowed and patch the existing pavement to allow traffic use during Phase 3.	Refer to Phase 2A traffic control plan and sections on sheet 135. Refer to the 127th Southbound detour plan on sheet 139. Refer to the traffic control sections applicable to Phase 2A on sheet 137. At a minimum, roadway construction should include the west through lane. Construction to the project center line may not be feasible in all locations.
2B	Provide a single lane of Northbound traffic on 127th Street in the east lane of the existing roadway. Maintain detour signing for Southbound 127th Street traffic between 21st Street and 13th Street. Access to and from 127th to Castlewood Drive or Tallowood Drive shall be maintained at all time. Both approaches shall not be closed at any time.	Begin this phase when construction is complete on the eastern portions of SWS Line 1 and existing pavement has been patched. Continue constructing items noted in Phase 2A above and the remaining portions of SWS Line 1.	Refer to Phase 2B traffic control plan and sections on sheet 136. Refer to the 127th Southbound detour plan on sheet 139. Refer to the traffic control sections applicable to Phase 2B on sheet 137. At a minimum, roadway construction should include the west through lane. Construction to the project center line may not be feasible in all locations.
3	Provide a single lane of Northbound traffic in the newly constructed west lane of 127th Street. Maintain detour for southbound 127th traffic.	Construct the proposed improvements on the east half of the project including storm sewers, entrances and side road approaches, sidewalk, bridge widening, retaining wall and channel improvements.	Refer to Phase 3 traffic control plan and sections on sheet 138. Construct remaining portions of the proposed pavement on the west half of the project.
4	Allow full-use of 127th Street between 13th and 21st. Provide temporary lane closures as necessary to complete the construction items to occur this phase.	Construct asphalt surface courses on entire project and install permanent pavement markings. Perform permanent seeding and site restoration activities. Construct all remaining items that have yet to be constructed.	Temporary lane closures and other traffic control operations used in this phase shall follow appropriate standard traffic control standards.

Contractor may construct improvements on the north half of the project independently from the south half of the project provided that a single lane of northbound traffic is maintained, proper shifting of traffic is performed in accordance with these plans and the MUTCD and temporary drainage is provided throughout construction.

Contractor may construct bridge widening improvements on both sides at once provided traffic control, including temporary concrete safety barrier is erected and maintained throughout construction. Additional concrete safety barrier will be at no cost to the owner.

All signs and pavement markings conflicting with construction traffic control shall be covered or removed as directed by the Engineer.

As the various construction activities progress, certain situations may arise that will preclude adhering to the original construction sequence or which, in the opinion of the Contractor, would readily adapt themselves to a more efficient phasing operation. Should this occur, the Contractor may submit to the Engineer an alternative plan for approval.

Contractor shall maintain existing drainage system during construction and address local drainage issues as necessary during construction. Temporary drainage measures will be subsidiary to other items in the contract. Contractor shall provide for drainage in sump areas opened to traffic. Ponded stormwater in sump areas will not be allowed.

Maintain access to all properties within the project limits at all times. Driveways less than 24' wide may be closed completely during re-construction. Wider drives shall be constructed half-at-a-time with the other half remaining open. Properties with two driveways may have one drive closed for re-construction with the other drive remaining open.

All traffic control signs and devices shall be in conformance with the latest edition of the Manual on Uniform Traffic Control Devices.

Contractor shall provide temporary asphalt pavement where necessary to bridge grade differentials between new and existing pavement. Cost of Temporary Surfacing shall be paid for as "AC Pavement 6" Temporary". The plan quantity shown is an arbitrary amount. The actual quantity will be determined in the field during construction as approved by the Engineer.

J:\PROJECTS\2014\1404290 - COV_127TH E 13TH TO 21ST\05-CIVIL\CAD\TRAFFIC\1429O-TD01.DWG

STATE	PROJECT NO.	YEAR	SHEET NO.	TOTAL SHEETS
KANSAS	87 N-0615-01	2017	134	183

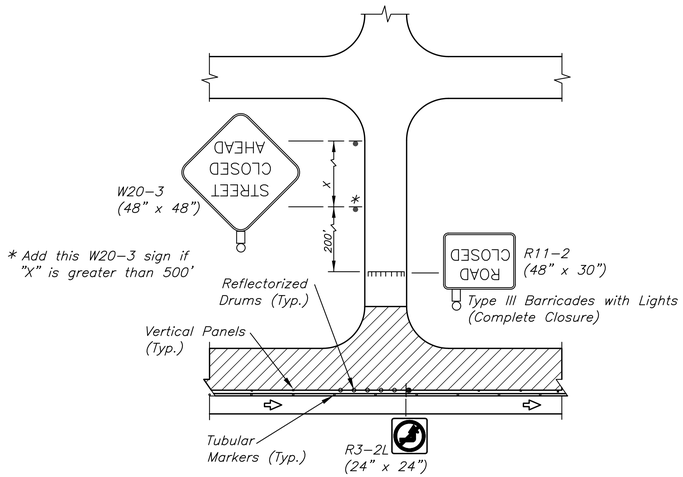

TYPICAL CLOSED SIDE STREET

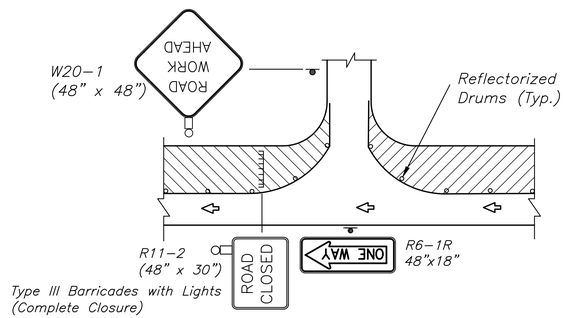

TYPICAL SIDE STREET OPEN
(ONE-WAY TRAFFIC ON MAIN ROAD)

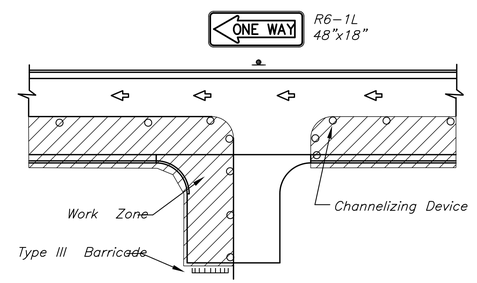

TYPICAL DRIVEWAY ENTRANCE CONSTRUCTION
(ONE-WAY TRAFFIC)

Maintain access to businesses at all times. If a single property has multiple entrances, one entrance at a time may be closed for construction.

MKEC
Wichita, KS • 316-684-9600

STREET IMPROVEMENTS FOR

127TH STREET EAST

FROM 13TH STREET NORTH TO 21ST STREET NORTH

©2017
MKEC Engineering
All Rights Reserved
www.mkec.com
These drawings and their contents, including, but not limited to, all concepts, designs, & ideas are the exclusive property of MKEC Engineering (MKEC), and may not be used or reproduced in any way without the express consent of MKEC.

CONSTRUCTION SEQUENCE SUMMARY

PROJECT NO.	472-85158
DATE	11/29/17
SCALE	NTS

DESIGNED	DRAWN	CHECKED
JRA	WNJ	JRA

NO.	REVISION	DATE

SHEET NO.

134 OF 183

STATE	PROJECT NO.	YEAR	SHEET NO.	TOTAL SHEETS
KANSAS	87 N-0615-01	2017	135	183

SCALE: 1"=80'
0 80 160

MKEC
Wichita, KS • 316-684-9600

STREET IMPROVEMENTS FOR

127TH STREET EAST

FROM 13TH STREET NORTH TO 21ST STREET NORTH

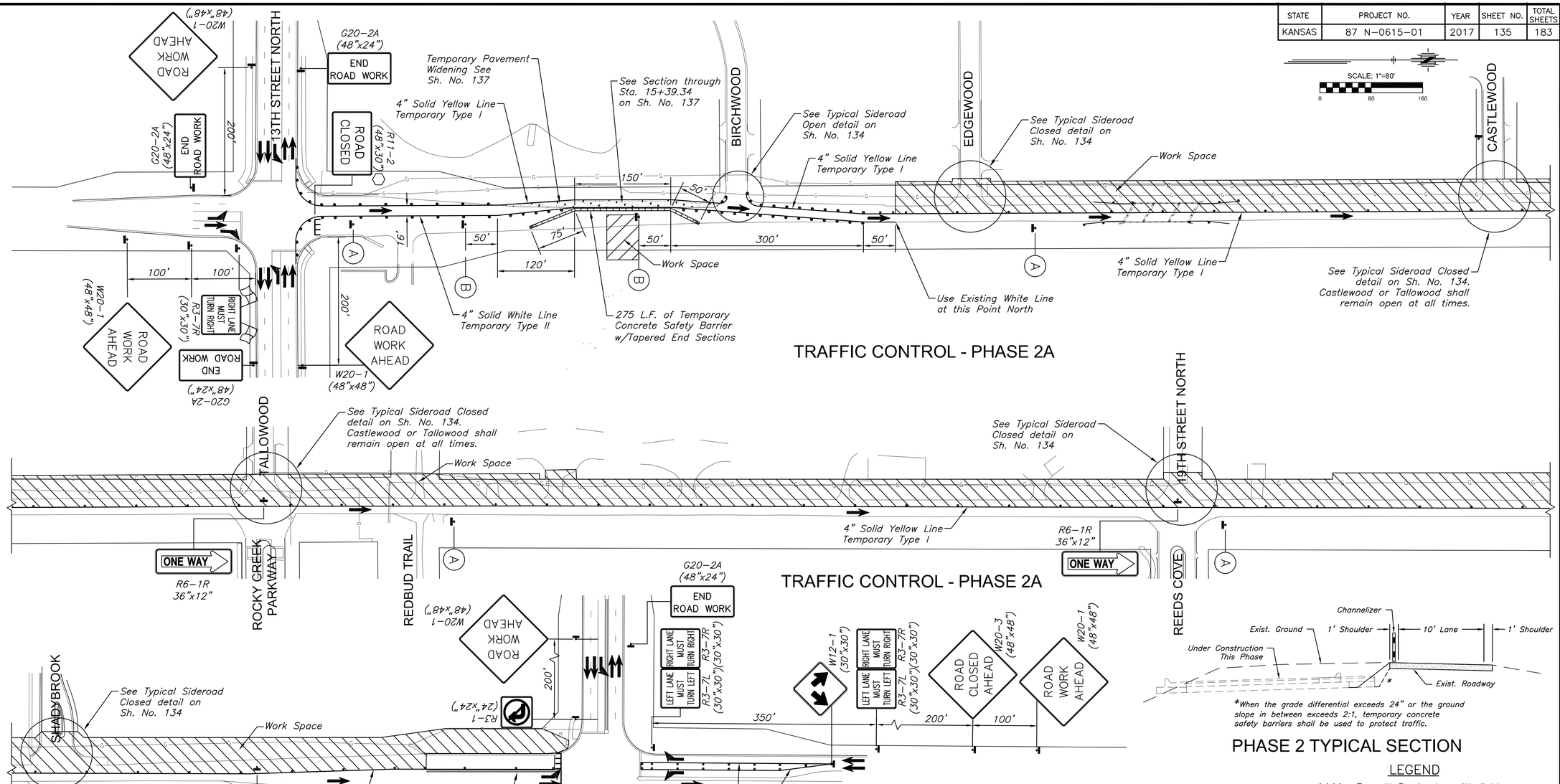

©2017
MKEC Engineering
All Rights Reserved
www.mkec.com
These drawings and their contents, including, but not limited to, all concepts, designs, & ideas are the exclusive property of MKEC Engineering (MKEC), and may not be used or reproduced in any way without the express consent of MKEC.

TRAFFIC CONTROL - PHASE 2A

PROJECT NO.	472-85158
DATE	11/29/17
SCALE	1"=80'
DESIGNED	JRA
DRAWN	WNJ
CHECKED	JRA

NO.	REVISION	DATE

SHEET NO.

135 OF 183

Sh. No. 135

PLOTTED: Wednesday, November 29, 2017 @ 03:31PM
J:\PROJECTS\2014\140104200 - COV_\127TH E. 13TH TO 21ST\05-CIVIL\CAD\TRAF\14200-TP02.DWG

PLOTTED: Wednesday, November 29, 2017 @ 03:31PM

STATE	PROJECT NO.	YEAR	SHEET NO.	TOTAL SHEETS
KANSAS	87 N-0615-01	2017	136	183

SCALE: 1"=80'
0 80 160

MKEC
Wichita, KS • 316-684-9600

STREET IMPROVEMENTS FOR

127TH STREET EAST

FROM 13TH STREET NORTH TO 21ST STREET NORTH

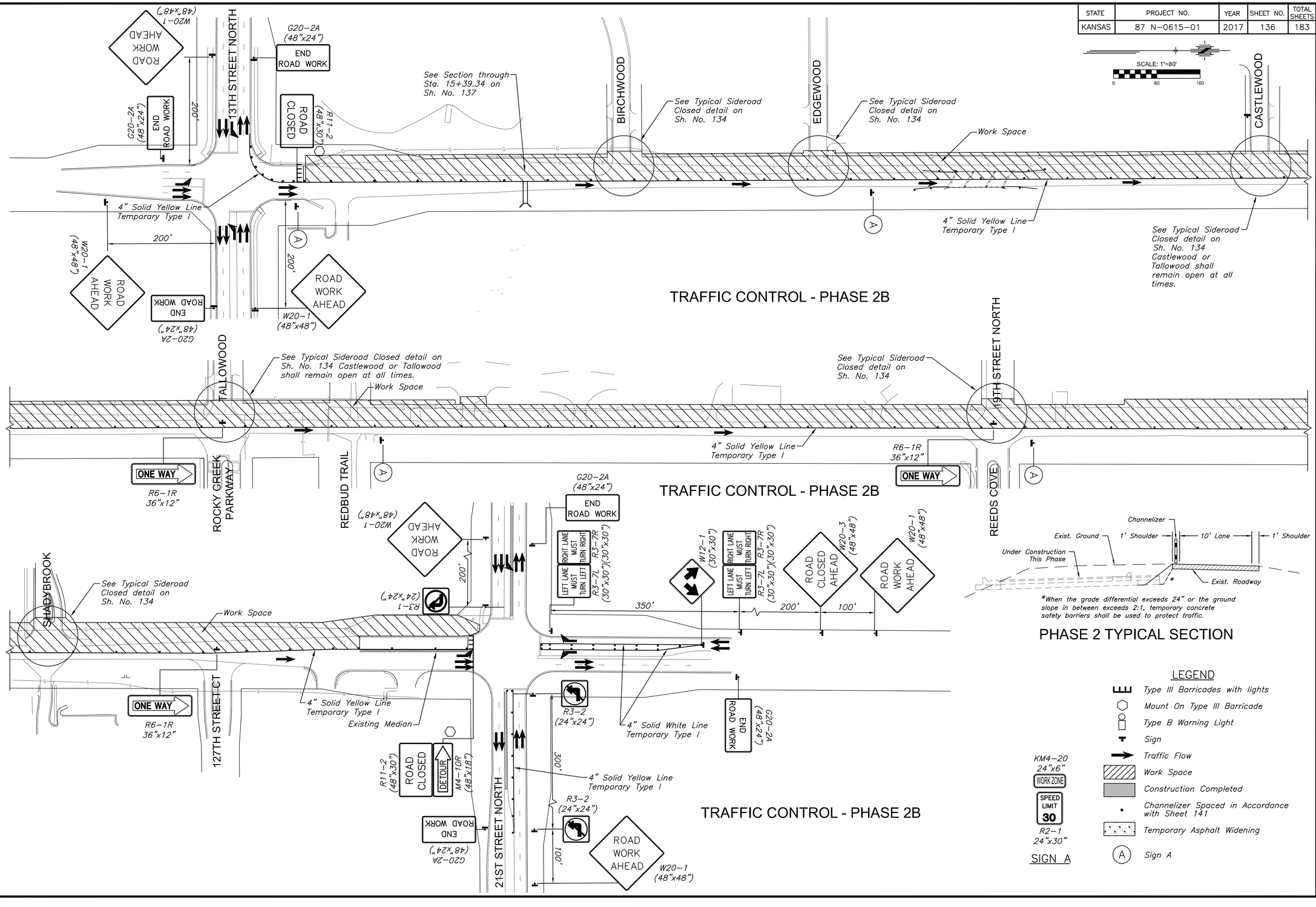

*When the grade differential exceeds 24" or the ground slope in between exceeds 2:1, temporary concrete safety barriers shall be used to protect traffic.

PHASE 2 TYPICAL SECTION

LEGEND

- Type III Barricades with lights
- Mount On Type III Barricade
- Type B Warning Light
- Sign
- Traffic Flow
- Work Space
- Construction Completed
- Channelizer Spaced in Accordance with Sheet 141
- Temporary Asphalt Widening
- (A) Sign A

KM4-20 24"x6" WORK ZONE
SPEED LIMIT 30
R2-1 24"x30"

SIGN A

©2017
MKEC Engineering
All Rights Reserved
www.mkec.com
These drawings and their contents, including, but not limited to, all concepts, designs, & ideas are the exclusive property of MKEC Engineering (MKEC), and may not be used or reproduced in any way without the express consent of MKEC.

TRAFFIC CONTROL - PHASE 2B

PROJECT NO.	472-85158
DATE	11/29/17
SCALE	1"=80'
DESIGNED	JRA
DRAWN	BKS
CHECKED	JRA

NO.	REVISION	DATE

SHEET NO.

136 OF 183

Sh. No. 136

J:\PROJECTS\2014\140104\0260 - COV_127TH E 13TH TO 21ST\05-CIVIL\CAD\TRAF\14260-TP05.DWG

PLOTTED: Wednesday, November 29, 2017 @ 03:32PM

STATE	PROJECT NO.	YEAR	SHEET NO.	TOTAL SHEETS
KANSAS	87 N-0615-01	2017	137	183

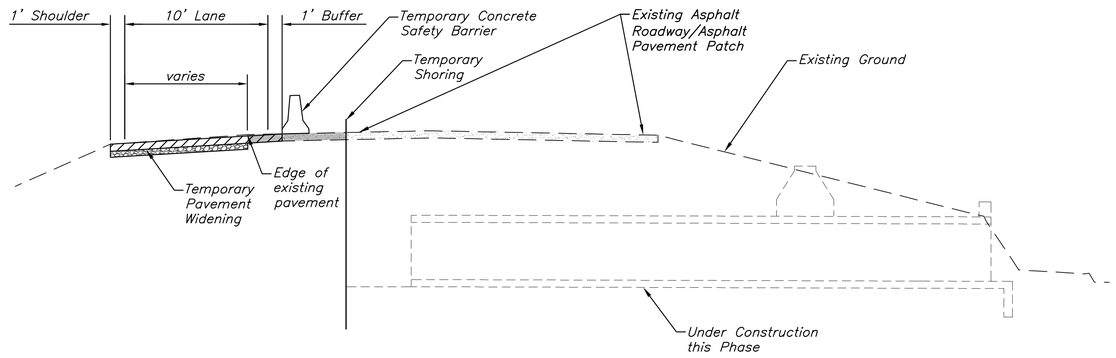

SECTION AT STA. 15+39.34 - PHASE 2A

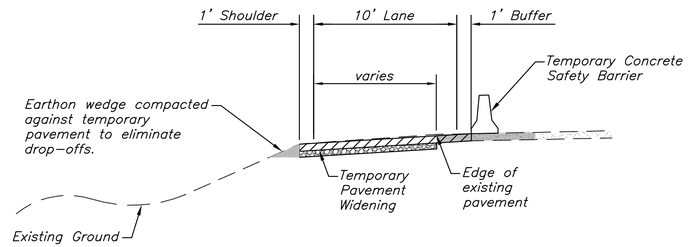

NOTE:
Payment for temporary pavement widening will be made based on the constructed area of "A.C. Pavement 6", Temporary (Phase Shift)" and "Crushed Rock Base 5", Temporary". Compacted fill below base rock, earthen wedge and the eventual removal of all materials are subsidiary. Geogrid reinforcing is not required.

TEMPORARY ASPHALT WIDENING SECTION - PHASE 2A

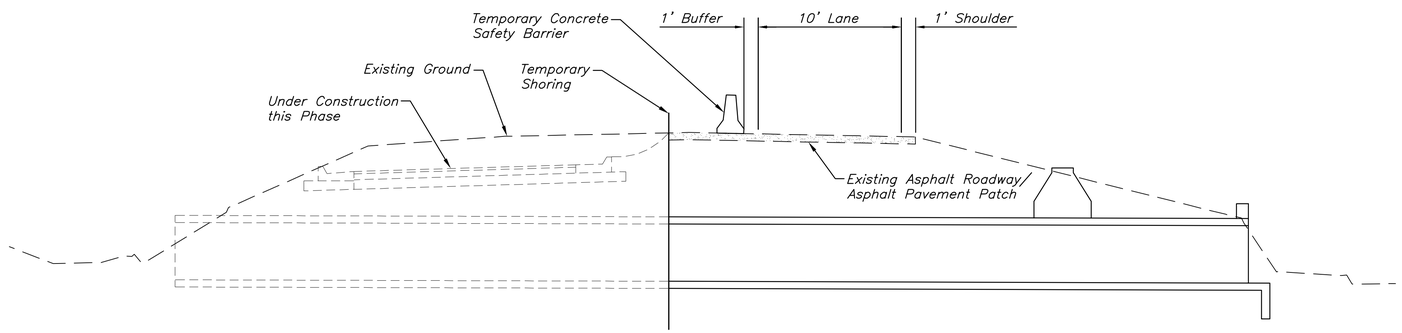

SECTION AT STA. 15+39.34 - PHASE 2B

MKEC
Wichita, KS • 316-684-9600

STREET IMPROVEMENTS FOR

127TH STREET EAST

FROM 13TH STREET NORTH TO 21ST STREET NORTH

©2017
MKEC Engineering
All Rights Reserved
www.mkec.com
These drawings and their contents, including, but not limited to, all concepts, designs, & ideas are the exclusive property of MKEC Engineering (MKEC), and may not be used or reproduced in any way without the express consent of MKEC.

TRAFFIC CONTROL SECTIONS & DETAILS - PHASE 2

PROJECT NO.	472-85158
DATE	11/29/17
SCALE	1"=5'

DESIGNED	DRAWN	CHECKED
JRA	BKS	JRA

NO.	REVISION	DATE

SHEET NO.

137 OF 183

J:\PROJECTS\2014\1401040290 - COVV_127TH E. 13TH TO 21ST\05-CIVIL\CAD\TRAFFIC\1429O-TP06.DWG

PLOTTED: Wednesday, November 29, 2017 @ 03:32PM

STATE	PROJECT NO.	YEAR	SHEET NO.	TOTAL SHEETS
KANSAS	87 N-0615-01	2017	138	183

SCALE: 1"=80'
0 80 160

MKEC
Wichita, KS • 316-684-9600

STREET IMPROVEMENTS FOR

127TH STREET EAST

FROM 13TH STREET NORTH TO 21ST STREET NORTH

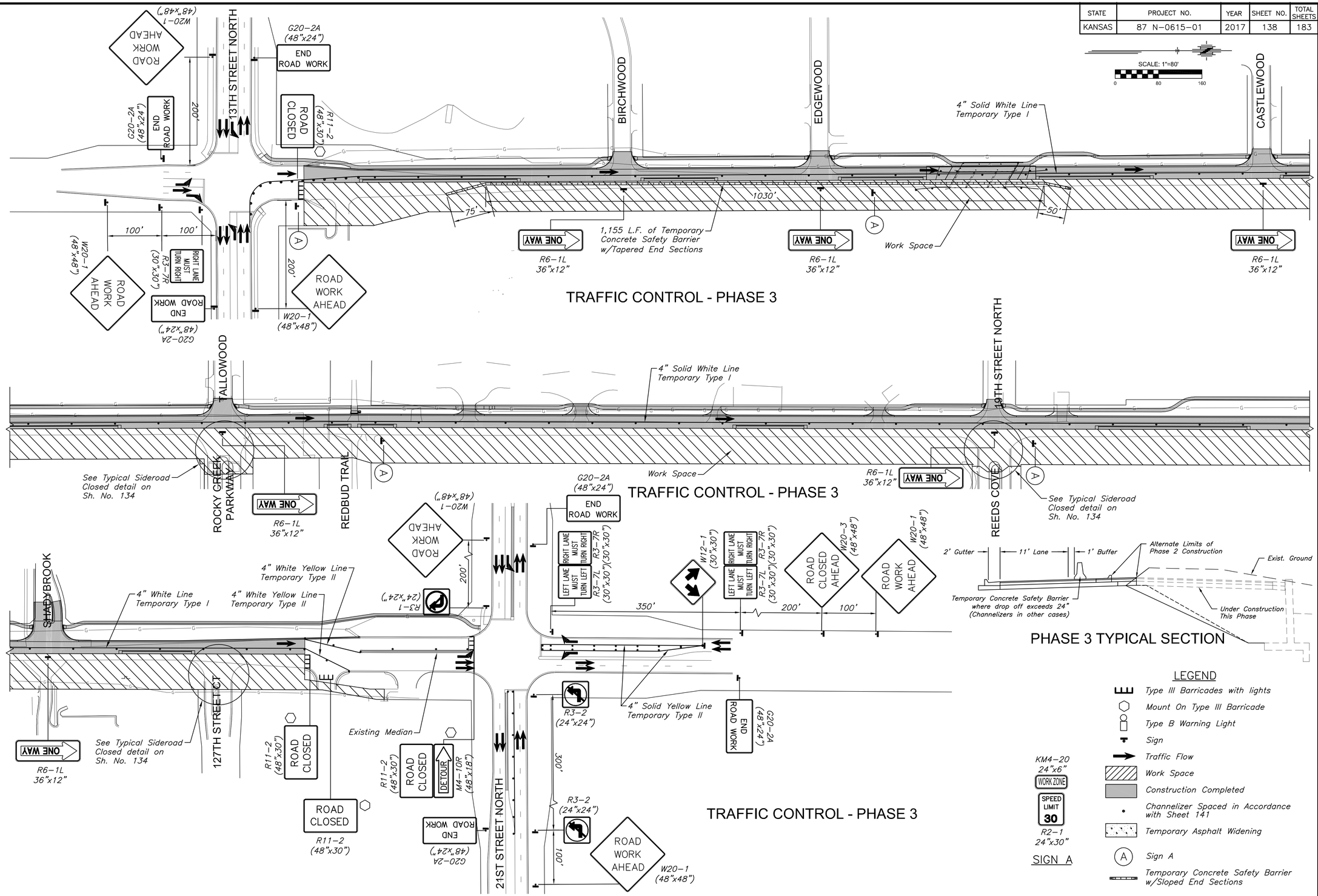

©2017
MKEC Engineering
All Rights Reserved
www.mkec.com
These drawings and their contents, including, but not limited to, all concepts, designs, & ideas are the exclusive property of MKEC Engineering (MKEC), and may not be used or reproduced in any way without the express consent of MKEC.

TRAFFIC CONTROL - PHASE 3

PROJECT NO.	472-85158
DATE	11/29/17
SCALE	1"=80'

DESIGNED	DRAWN	CHECKED
JRA	WNJ	JRA

NO.	REVISION	DATE

SHEET NO.

138 OF 183

Sh. No. 138

J:\PROJECTS\2014\1401040926 - COW_ 127TH E 13TH TO 21ST\05-CIVIL\CAD\TRAFF\14290-TP03.DWG

PLOTTED: Wednesday, November 29, 2017 @ 03:33PM

STATE	PROJECT NO.	YEAR	SHEET NO.	TOTAL SHEETS
KANSAS	87 N-0615-01	2017	139	183

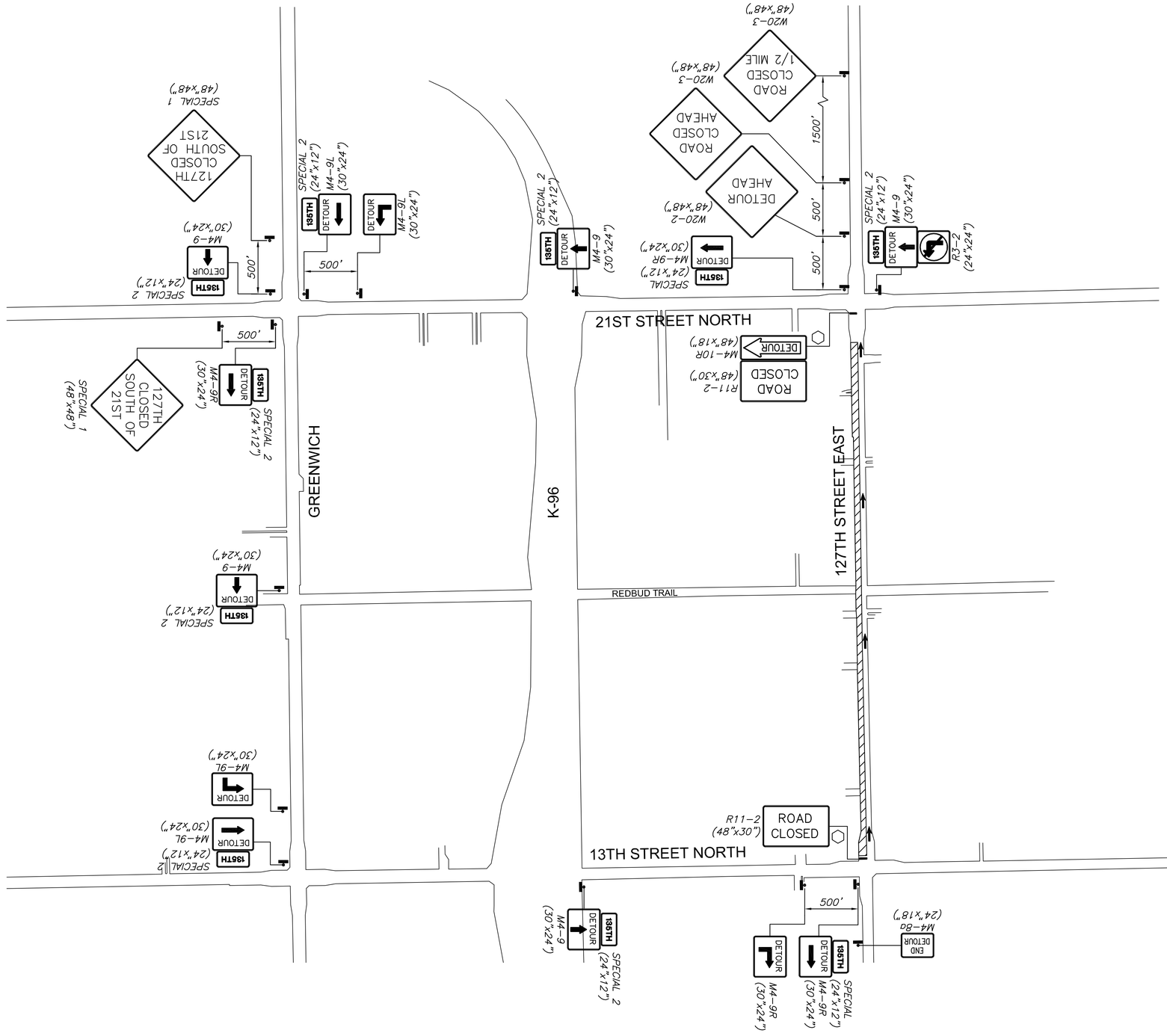

Note:
See Traffic Control Plans for additional signing and traffic control requirements.

LEGEND

- Type III Barricades with lights
- Mount On Type III Barricade
- Type B Warning Light
- Sign
- Traffic Flow
- Work Space

MKEC
Wichita, KS • 316-684-9600

STREET IMPROVEMENTS FOR

127TH STREET EAST

FROM 13TH STREET NORTH TO 21ST STREET NORTH

©2017
MKEC Engineering
All Rights Reserved
www.mkec.com
These drawings and their contents, including, but not limited to, all concepts, designs, & ideas are the exclusive property of MKEC Engineering (MKEC), and may not be used or reproduced in any way without the express consent of MKEC.

TRAFFIC DETOUR PLAN

PROJECT NO.	472-85158
DATE	11/29/17
SCALE	NTS

DESIGNED	DRAWN	CHECKED
JRA	WNJ	JRA

NO.	REVISION	DATE

SHEET NO.

139 OF 183

Sh. No. 139

J:\PROJECTS\2014\1401040299 - COW_127TH E 13TH TO 21ST\06-CIVIL\CAD\TRAFFIC\1429D-TP01.DWG

PLOTTED: Wednesday, November 29, 2017 @ 05:37PM

STATE	PROJECT NO.	YEAR	SHEET NO.	TOTAL SHEETS
KANSAS	472-85158	2017	140	183

SHIFTING TAPER DETAIL

Add signs and devices as shown for work inside a closed lane that extends near to (or into) the open traffic lane.

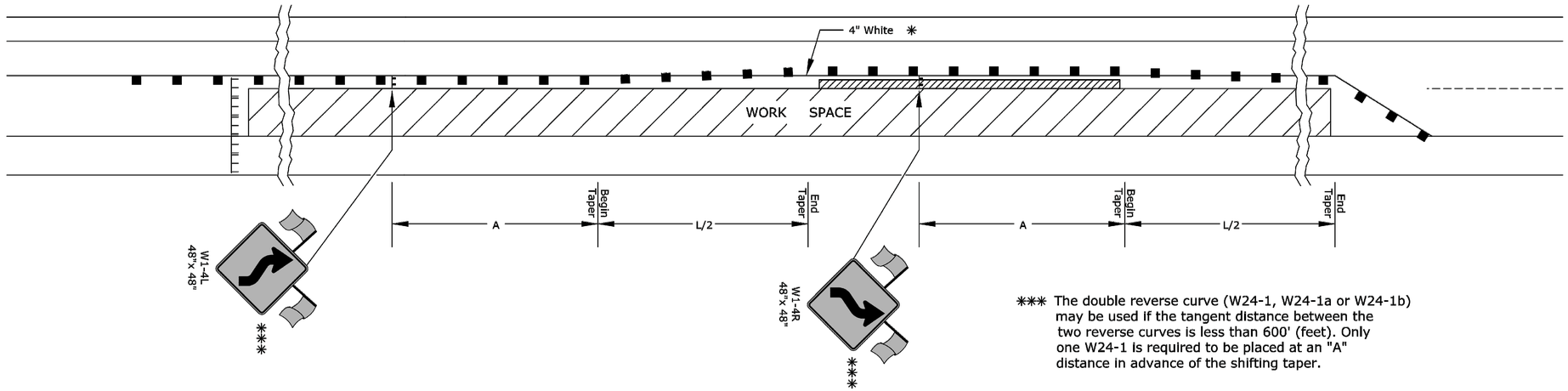

✳✳✳ The double reverse curve (W24-1, W24-1a or W24-1b) may be used if the tangent distance between the two reverse curves is less than 600' (feet). Only one W24-1 is required to be placed at an "A" distance in advance of the shifting taper.

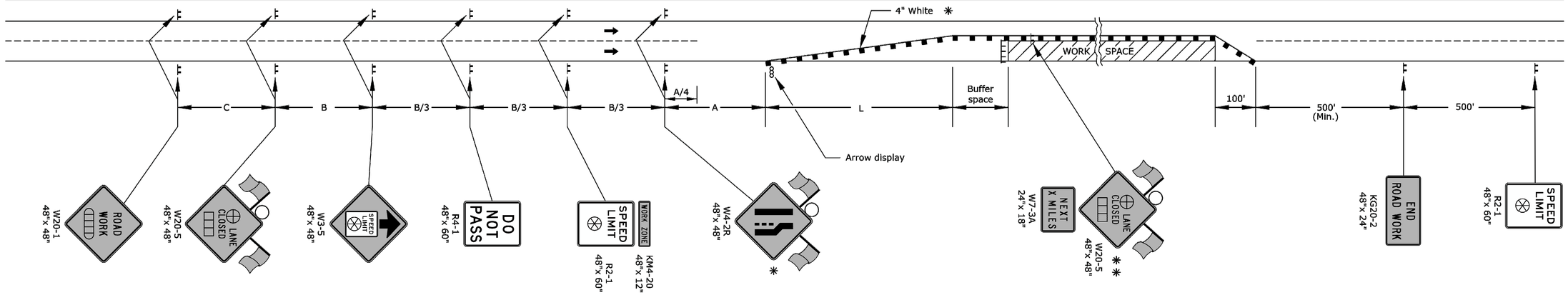

- Type 3 barricades
- X Length to the nearest whole mile
- ■ Channelizing device
- Ahead, 1500 ft, or 1 mile
- Ahead, 1000 ft, 1500 ft, or ½ mile
- ⊕ Right or left
- ⊛ Speed to be determined by the Engineer
- ○ Type "A" low intensity warning light

✳ For left lane closures use W4-2L and yellow edge line along channelizing devices.

✳✳ The W20-5 (⊕ Lane Closed) and W7-3A (Next X Miles) signs should be placed at 2 mile increments on a project of 4 miles or longer.

Left-side signs shall be omitted for a four-lane undivided highway.

One flagger should be stationed within each multi-lane roadway activity area where work is in a closed lane adjacent to traffic and not seperated by a concrete safety barrier system.

NO.	DATE	REVISIONS	BY	APP'D
3				
2				
1				

KANSAS DEPARTMENT OF TRANSPORTATION

TRAFFIC CONTROL
LANE CLOSURE ON MULTILANE HWY

TE744

FHWA APPROVAL			06/01/15	APP'D	Kristina Ericksen		
DESIGNED	B.A.H.	DETAILED	R.W.B.	QUANTITIES		TRACED	
DESIGN CK.		DETAIL CK.		QUAN. CK.		TRACE CK.	

KDOT Graphics Certified 06-01-2015

J:\PROJECTS\2014\1401040269 - COW_127TH E 13TH TO 21ST\05-CIVIL\CAD\TRAF\142901E744.DWG

PLOTTED: Wednesday, November 29, 2017 @ 05:40PM

1) Design Speed: Those items delegated to temporary traffic control should be designed and installed using the posted/legal speed of the roadway prior to work starting.

2) Minimum lane width: Lane widths shall be a minimum of 11' (measured between centerlines of pavement markings) or as shown on the plans, or as directed by the engineer. A lane width less than 11' may require restricted roadway width signing.

3) Consideration should be made to seperate pedestrian and, if needed, bicycle movements from both work site activity and vehicular traffic. Unless a reasonable safe route that does not involve crossing the roadway can be provided, pedestrians should be appropriately directed with advance signing that encourages them to cross to the opposite side of the roadway. In urban and suburban areas with high vehicular traffic volumes, these signs should be placed at intersections (rather than midblock locations) so that pedestrians are not confronted with midblock work sites that will induce them to attempt skirting the work site or making a midblock crossing.

4) When existing pedestrian facilities are disrupted, closed, or relocated, the temporary facilities shall be detectable and include accessiblity features consistent with the features present in the existing pedestrian facility.

5) When the driving surface open to traffic is milled, is a temporary surface made of loose material, or when directed by the engineer use the W8-15 (Grooved Pavement) or W8-7(Loose Gravel) a "C" distance after the W20-1 (Road Work Ahead) on mainline approaches. Signs may be used with the W8-15p motorcycle plaque as directed by the engineer. Display signs in advance of the condition as long as the condition is present.

6) Alternative temporary rumble strip options may be available. Please contact the Temporary Traffic Control Unit for more information at 785-296-0355 or 785-296-1183.

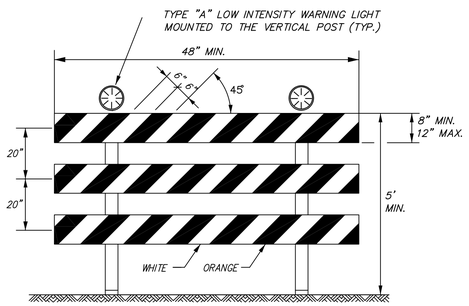

TYPE III BARRICADE WITH LIGHTS

The entire area of barricade rails, both front and back, shall have ASTM Type III sheeting.

The stripes shall slope downward to the side traffic is to proceed or toward the center of the roadway at road closures.

Approved signs mounted on Type III barricades should not cover more than 50% of the top two rails or 33% of the total area of the three rails.

When barricades are placed end-to-end or staggered, a Type "A" low intensity warning light shall be mounted to the vertical post near each outside corner of the end barricades.

BARRICADE PLACEMENT:

A) COMPLETE ROAD CLOSURE

When a roadway is closed, Type III barricades shall be placed end-to-end to completely cover the roadway and shoulders. When access must be allowed for construction or other official/government vehicles, Type III barricades shall be longitudinally staggered far enough apart from one another to allow safe passage of vehicles and maintain the appearance of a closed roadway. Type III barricades shall be realigned and placed end-to-end to deny any access when the construction activity has ceased for the day.

B) ROAD CLOSED - LOCAL TRAFFIC

As shown in figure 4, when local traffic must be allowed access into the work zone, Type III barricades shall be longitudinally staggered to maintain the appearance of a closed roadway. A second line of end-to-end Type III barricades shall be placed just beyond the last access point in the work zone, to completely close the roadway as described in note 2-A.

As shown in figure 1 and figure 3, at the point where thru traffic must detour and local traffic can proceed to the location where the roadway is completely closed, the R11-3a (road closed miles ahead local traffic only) or R11-4(road closed # local traffic only or road closed to thru traffic) sign shall be used with Type III barricades (winged position), placed on the shoulders of roadway.

STATE	PROJECT NO.	YEAR	SHEET NO.	TOTAL SHEETS
KANSAS	472-85158	2017	141	183

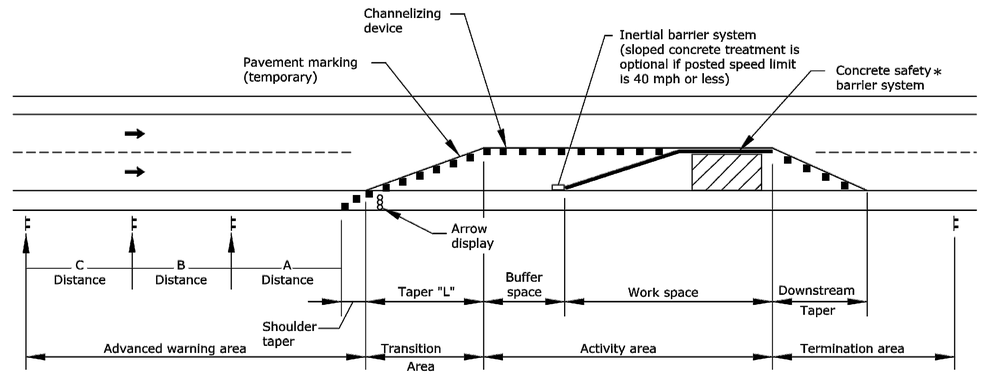

TYPICAL WORK ZONE COMPONENTS

∗ When concrete barrier system is used, portable channelizing devices are not needed along the tangent barrier section.

Minimum advance warning sign spacing (in feet):

SPEED (MPH) ∗	*A*	*B*	*C*
URBAN (40 MPH OR LOWER)	*100*	*100*	*100*
URBAN (45 MPH OR HIGHER)	*350*	*350*	*350*
RURAL (55 MPH OR LOWER)	*500*	*500*	*500*
RURAL (60 MPH OR HIGHER)	*750*	*750*	*750*
EXPRESSWAY/FREEWAY	*1000*	*1500*	*2640*

∗ Posted speed prior to work starting

The minimum spacing between signs shall be no less than 100', unless directed by the engineer.

The spacing between any signs may be increased beyond the minimum values in the table above as approved by the engineer in order to maximize visibility.

Taper Formulas:

L = WS for speeds of 45 MPH or more

L = $WS^2/60$ for speeds of 40 MPH or less

Where: L =Minimum length of taper in feet
S =Numericial value of posted speed prior to work starting in MPH
W =Width in offset feet

Shifting taper=1/2 L
Shoulder taper=1/3 L

Channelizer placement:

(1) The spacing between devices in transition area (taper) should not exceed a distance in feet equal to 1/2 the posted speed limit in mph prior to work starting.

(2) The spacing between devices in the advanced warning area and the activity area should not exceed a distance in feet equal to two times the posted speed limit in mph prior to work starting.

(3) Channelizing devices shall be placed for optimum visibility, normally at right angles to the traffic flow.

(4) Place directional indicator barricades in series to direct traffic onto the new path. The arrow sign should not be visible to opposing traffic.

(5) Alternating diagonal orange and white striping must slope downward in the direction traffic is expected to pass.

Buffer Space

SPEED (MPH) ∗	*20*	*25*	*30*	*35*	*40*	*45*	*50*	*55*	*60*	*65*	*70*	*75*
LENGTH (ft)	*115*	*155*	*200*	*250*	*305*	*360*	*425*	*495*	*570*	*645*	*730*	*820*

∗ Posted speed prior to work starting

Neither work activity nor storage of equipment, vehicles, or material should occur in the buffer space. When a protection vehicle is placed in advance of the work space, only the space upstream of the vehicle constitutes the buffer space.

If temporary concrete safety barrier system is used to seperate approaching traffic from the work space, the barrier system shall be considered part of the activity area. A full lane width should be available throughout the length of the buffer space. See typical work zone components above.

NO.	DATE	REVISIONS	BY	APP'D
3				
2				
1	08/18/15	Channelizer spacing info	R.W.B.	K.E.

KANSAS DEPARTMENT OF TRANSPORTATION

TRAFFIC CONTROL GENERAL NOTES

~~TE700~~

FHWA APPROVAL			08/18/15	APP'D	Kristina Eriksen		
DESIGNED	B.A.H.	DETAILED	R.W.B	QUANTITIES		TRACED	
DESIGN CK.		DETAIL CK.		QUAN. CK.		TRACE CK.	

KDOT Graphics Certified 08-18-2015

J:\PROJECTS\2014\1401040290 - COW_127TH E 13TH TO 21ST\05-CIVIL\CAD\TRAFF\1402907E700.DWG

PLOTTED: Wednesday, November 29, 2017 @ 05:41PM

STATE	PROJECT NO.	YEAR	SHEET NO.	TOTAL SHEETS
KANSAS	472-85158	2017	142	183

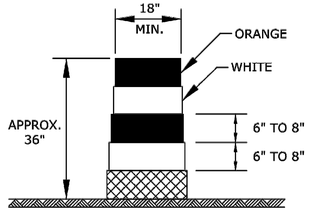

DRUM

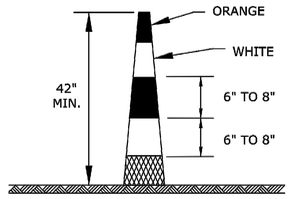

CONICAL DELINEATOR

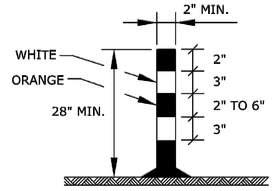

TUBULAR MARKER

Striping as shown for up to 42".

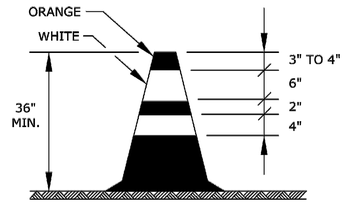

TRAFFIC CONE

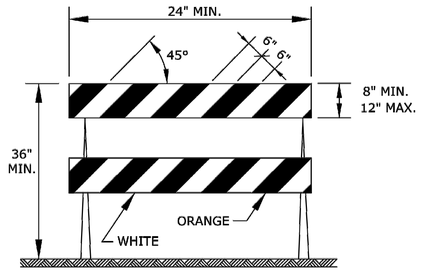

TYPE 2 BARRICADE

For rails less than 36" long, 4" wide stripes may be used.
All stripes shall slope downward to the traffic side for channelization.

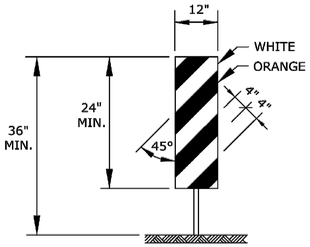

VERTICAL PANEL

The stripes shall slope downward to the traffic side for channelization.

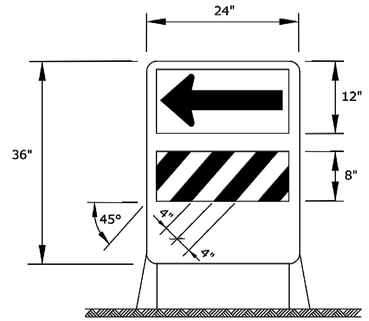

DIRECTION INDICATOR BARRICADE

The stripes shall slope downward in the direction traffic is to pass.
The direction indicator barricade shall be used in series to direct the motorist into the intended lane of travel.

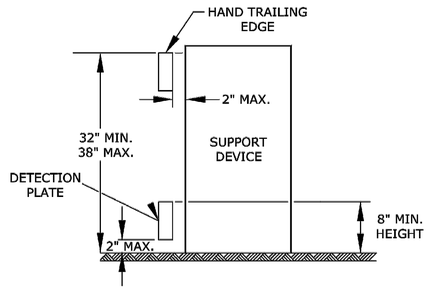

PEDESTRIAN CHANNELIZER

1. Support device shall not project beyond the detection plate into the pathway.
2. Hand trailing edges and detection plates are optional for continuous walls.
3. Interconnect pedestrian channelizers to prevent displacement and to provide continuous guidance through or around work.
4. Alternate pathways shall be firm, stable, and slip resistant.
5. Treat height differentials > 1/2" in the surfaces of alternate paths with a firm, stable, and slip resistant temporary ramp having a slope of 12:1 or flatter and having a width equal to the alternate path.
6. Use alternating orange/white on interconnected devices.

ITEM \ LOCATION		Cross-overs	Shoofly Diversions	Tangents	Tapers	Ramps	Head to Head	Object Identifier	Lead-in Devices	Gores
PORTABLE										
	Drums	Yes	Yes	Yes	Yes	Yes	(1)	Yes	Yes	Yes
	Conical Delineators	Yes	Yes	Yes	Yes	Yes	(1)	Yes	Yes	Yes
	Vertical Panels	(2)	(2)	(2)	(2)	(2)	(1,2)	YES	(2)	(2)
	Direction Indicator Barricade	NO	NO	NO	Yes	NO	NO	NO	NO	NO
	Type 2 Barricade	(2)	(2)	(2)	(2)	NO	NO	Yes	NO	NO
	Traffic Cones	NO	NO	(4)	(4)	(4)	NO	(4)	(4)	(4)
FIXED										
	Tubular Markers	(3)	(3)	(3)	NO	(3)	Yes	NO	Yes	Yes
	Vertical Panels	(3)	(3)	(3)	(3)	(3)	(3)	Yes	(2,3)	(2)

(1) Not allowed on centerline delineation along freeways or expressways.
(2) The stripes shall slope downward to the traffic side for channelization.
(3) May be used upon the approval of the engineer.
(4) Daytime operations only.

NO.	DATE	REVISIONS	BY	APP'D
3				
2				
1				

KANSAS DEPARTMENT OF TRANSPORTATION

TRAFFIC CONTROL CHANNELIZING DEVICES

TE702

FHWA APPROVAL		06/01/15	APP'D	Kristina Ericksen	
DESIGNED	L.E.R.	DETAILED	R.W.B.	QUANTITIES	TRACED
DESIGN CK.		DETAIL CK.		QUAN. CK.	TRACE CK.

KDOT Graphics Certified 06-01-2015

J:\PROJECTS\2014\1401040280 - COW_127TH E 13TH TO 21ST\05-CIVIL\CAD\TRAF\142907E702.DWG

PLOTTED: Wednesday, November 29, 2017 @ 05:43PM

STATE	PROJECT NO.	YEAR	SHEET NO.	TOTAL SHEETS
KANSAS	472-85158	2017	143	183

SIGN LAYOUT INFORMATION

END ROAD WORK — KG20-2 — STD. SIZE EXPWY/FREEWAY: 6" C, 48"x 24"

WAIT FOR PILOT CAR — KG20-5 — STD. SIZE EXPWY/FREEWAY: 6" C, 48"x 24"

WORK ZONE — KM4-2O — STD. SIZE: 3" C, 24"x 6" — EXPWY/FREEWAY: 6" C, 48"x 12"

NEXT X MILES — W7-3a — Mileage to be determined by the engineer.


W8-17 — STD. SIZE EXPWY/FREEWAY: 48"x 48"

SHOULDER DROP-OFF — W8-17P (OPTIONAL) — STD. SIZE EXPWY/FREEWAY: 30"x 24"

GROOVED PAVEMENT — W8-15 — STD. SIZE EXPWY/FREEWAY: 8" D, 48"x 48"

LOOSE GRAVEL — W8-7 — STD. SIZE EXPWY/FREEWAY: 8" D, 48"x 48"


W8-15p — STD. SIZE EXPWY/FREEWAY: 30"x 24"

UNEVEN LANES — W8-11 — STD. SIZE EXPWY/FREEWAY: 8" D, 48"x 48"

NB US-75 CLOSED FOLLOW DETOUR — SP-01 (SPECIAL SIGN) — STD. SIZE: 6" C — EXPWY/FREEWAY: 10" D

US-75 CLOSED NORTH OF Topeka FOLLOW DETOUR — SP-02 (SPECIAL SIGN)

STD. SIZE	EXPWY/FREEWAY
UPPERCASE: 6" C	UPPERCASE: 10" D
LOWERCASE: 4.5" C	LOWERCASE: 8" D

ALL CITY NAMES AND STREET NAMES ON SPECIAL SIGNS AND DESTINATION SIGNS MUST HAVE UPPER AND LOWER CASE LETTERS.

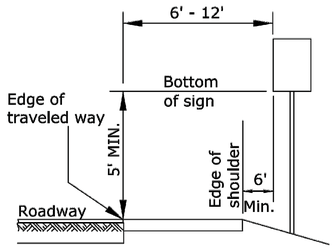

Rural

1) Ground-mounted signs shall be mounted at a minimum height of 5' measured from the bottom of sign to the near edge of the pavement.

2) Large signs having an area exceeding 50 square feet installed on multiple breakaway posts shall be mounted a minimum of 7' above the ground.

3) The height of the secondary sign mounted below another sign may be 4' measured from the bottom of the sign to the near edge of the pavement. Signs shall not overlap each other.

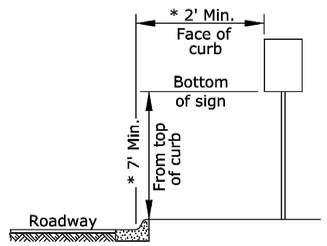

Urban

1) Signs shall be mounted at a minimum height of 7' measured from the bottom of sign to the near edge of the pavement.

2) Neither portable nor permanent sign supports should be located on sidewalks or areas designated for pedestrian or bicycle traffic.

3) Signs mounted lower than 7' should not project more than 4" into pedestrian facilities.

4) The height from of the secondary sign mounted below another sign may be 6' measured from the bottom of sign to the near edge of the pavement. Signs shall not overlap each other.

5) Large signs having an area exceeding 50 square feet installed on multiple breakaway posts shall be mounted a minimum of 7' above the ground.

* 6) Pedestrian detour signing shall be a minimum of 2' measured from the top of the pedestrian pathway to the bottom of the sign and shall not protrude into the walkway nor shall it project beyond the back of curb.

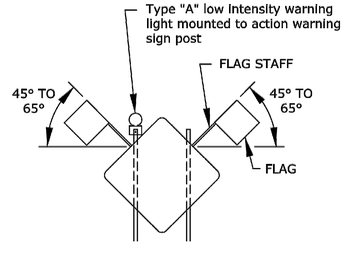

When the sign width is equal to or greater than 9', three or more wood posts may be used with a minimum of 4' between the centerline of each post. All signs less than 9' in width shall use a maximum of two wood posts.

In the case of hitting rock when driving posts
1. Shift the sign location. Do not violate minimum sign spacing.
2. With the engineer's approval, use acceptable alternative sign stands.

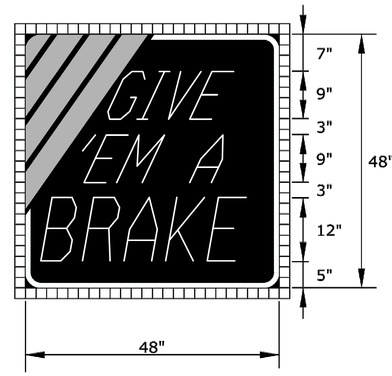

KI-104a

SIGN NUMBER	GIVE EM A BRAKE
WIDTH x HEIGHT	4'-0" x 4'-0"
BORDER WIDTH	1.0"
CORNER RADIUS	4.0"
STRIPE WIDTH	3.0"
MOUNTING	GROUND
BACKGROUND	TYPE: NON-REFLECTIVE
	COLOR: BLACK
LEGEND/BORDER	TYPE: REFLECTIVE
	COLOR: WHITE
LEGEND FONT	DUTCH 801 ROMAN SWC 25 DEGREE SLANT
STRIPES	TYPE: REFLECTIVE
	COLOR: ORANGE

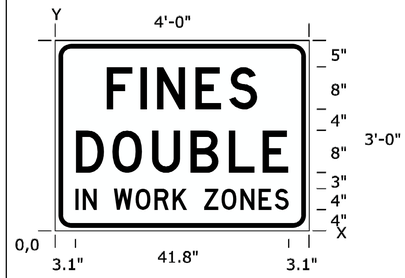

KI-105a

SIGN NUMBER	FINES DOUBLE
WIDTH x HEIGHT	4'-0" x 3'-0"
BORDER WIDTH	0.9"
CORNER RADIUS	3.0"
MOUNTING	GROUND
BACKGROUND	TYPE: REFLECTIVE
	COLOR: WHITE
LEGEND/BORDER	TYPE: NON-REFLECTIVE
	COLOR: BLACK

DIMENSIONS IN INCHES — SPACINGS ARE TO START OF NEXT LETTER

Y FONT	LETTER SPACINGS															HT LEN
23.0 D		F	I	N	E	S										8.0
	9.7	6.4	3.2	7.3	6.4	5.4	9.7									28.6
11.0 D		D	O	U	B	L	E									8.0
	3.9	6.9	7.5	7.3	7.3	6.4	4.9	3.9								40.3
4.0 D		I	N		W	O	R	K		Z	O	N	E	S		4.0
	3.1	1.6	2.7	3.2	4.3	3.8	3.6	2.8	3.2	3.4	3.8	3.6	3.2	2.7	3.1	41.8

Notes:

Typically, there are two sets of informational signs installed per project: one for each direction of traffic.

Install signs a minimum of 500' in advance of the road work ahead sign. The engineer may designate a more appropriate location if conditions dictate.

The informational signs are not to interfere with the traffic control signs for the project.

NO.	DATE	REVISIONS	BY	APP'D
3				
2				
1				

KANSAS DEPARTMENT OF TRANSPORTATION

TRAFFIC CONTROL SIGN INFORMATION

TE710

FHWA APPROVAL		06/01/15	APP'D	Kristina Pyle	
DESIGNED	R.W.B.	DETAILED	R.W.B.	QUANTITIES	TRACED
DESIGN CK.		DETAIL CK.		QUAN. CK.	TRACE CK.

KDOT Graphics Certified 06-01-2015

Sh. No. 143

J:\PROJECTS\2014\1401040269 - COW_127TH E 13TH TO 21ST\05-CIVIL\CAD\TRAFF\1402807E710.DWG

PLOTTED: Wednesday, November 29, 2017 @ 05:44PM

STATE	PROJECT NO.	YEAR	SHEET NO.	TOTAL SHEETS
KANSAS	472-85158	2017	144	183

Perforated square steel tube (P.S.S.T.) post setup

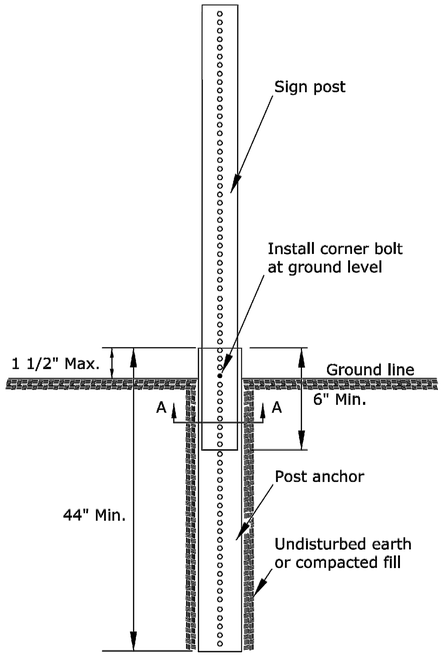

P.S.S.T. detail

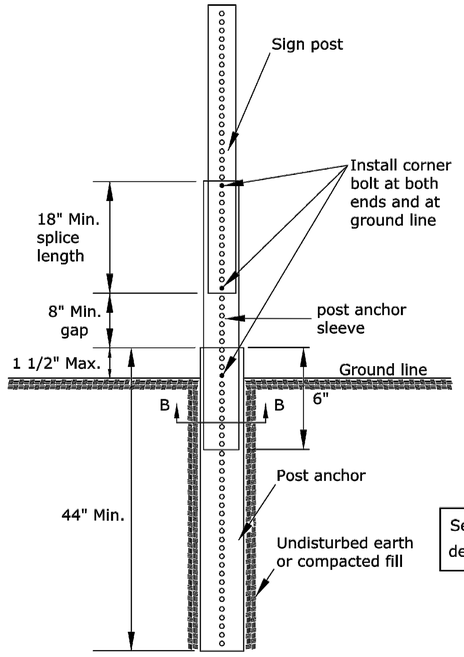

Telescoping P.S.S.T. detail

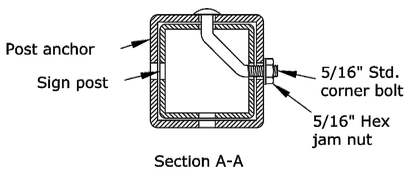

Section A-A

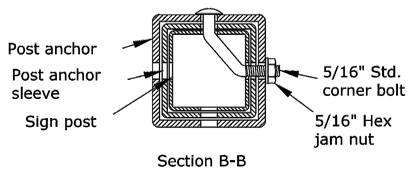

Section B-B

Details for 2", 2 1/4", or 2 1/2" sign posts

Place bolts in the same corner along each sign post.

Wood post setup

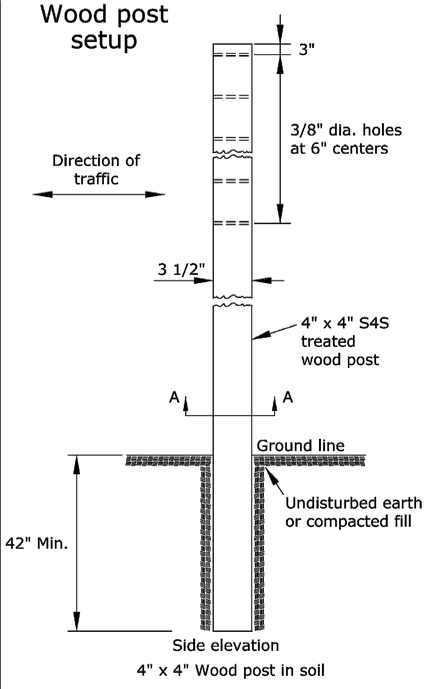

Side elevation

4" x 4" Wood post in soil

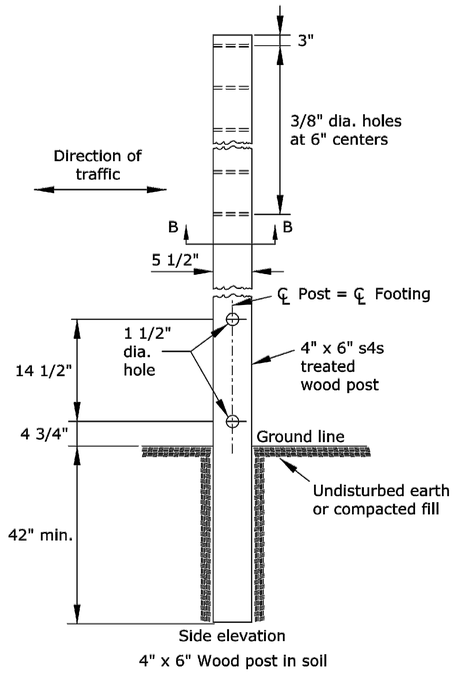

Side elevation

4" x 6" Wood post in soil

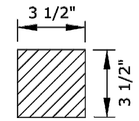

Section A-A

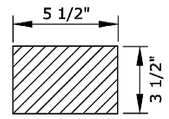

Section B-B

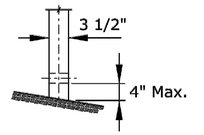

Front elevation

See TE710 for additional details and requirements

3 lb/f U-Channel setup

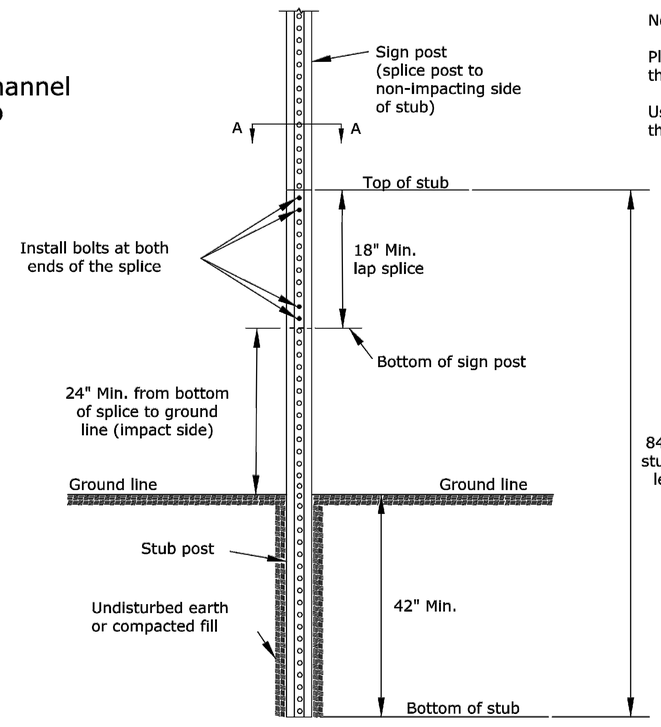

Notes:

Place two bolts at both ends of the splice through the holes nearest the ends of the splice.

Use manufacturer recommended spacers over the bolts between the spliced pieces of U-Channel.

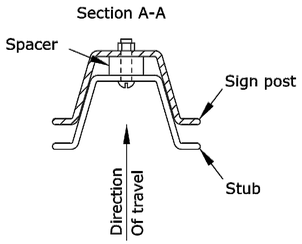

NO.	DATE	REVISIONS	BY	APP'D
3				
2				
1				

KANSAS DEPARTMENT OF TRANSPORTATION

TRAFFIC CONTROL SIGN POSTS

TE712

FHWA APPROVAL		06/01/15	APP'D	Kristina Pyle	
DESIGNED	B.A.H.	DETAILED	R.W.B.	QUANTITIES	TRACED
DESIGN CK.		DETAIL CK.		QUAN. CK.	TRACE CK.

KDOT Graphics Certified 06-01-2015

J:\PROJECTS\2014\1401040280 - COW_127TH E 13TH TO 21ST\05-CIVIL\CAD\TRAF\142907E712.DWG

STATE	PROJECT NO.	YEAR	SHEET NO.	TOTAL SHEETS
KANSAS	87 N-0615-01	2017	145	183

FLAGGER

NOTES:
1. One lane of traffic in each direction shall be maintained at all time when work has ceased and flaggers are not present.
2. All signs for traffic control shall be located between Rocky Creek Parkway and Reed's Cove.
3. Pipes installed one at a time. Move and adjust traffic control between installations.

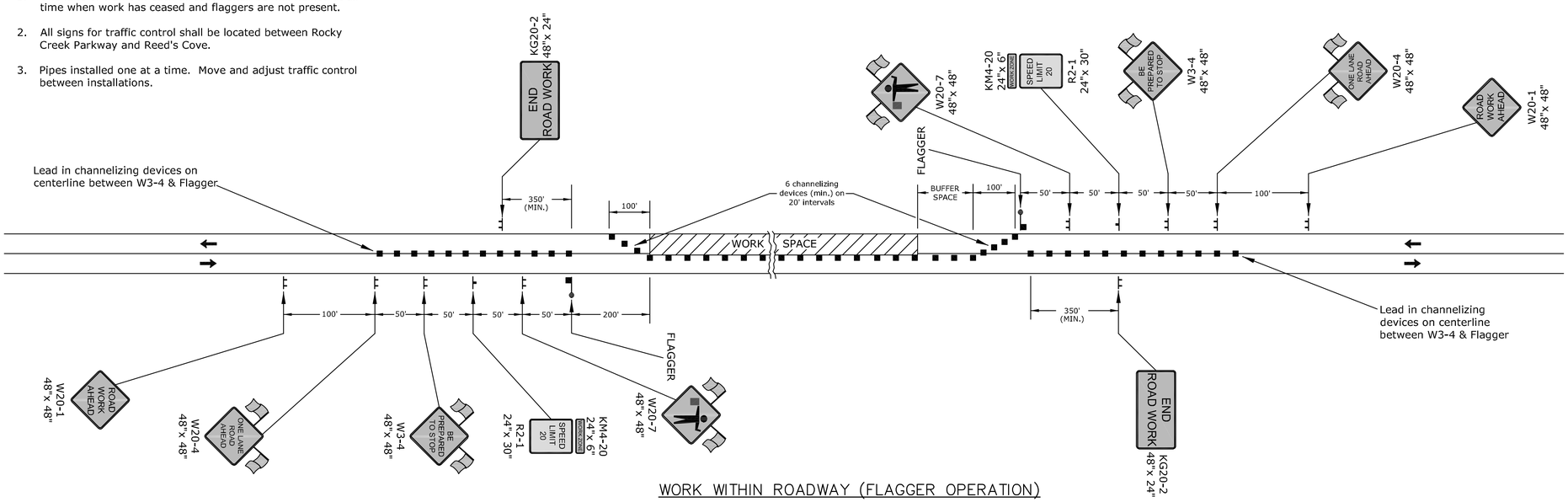

WORK WITHIN ROADWAY (FLAGGER OPERATION)

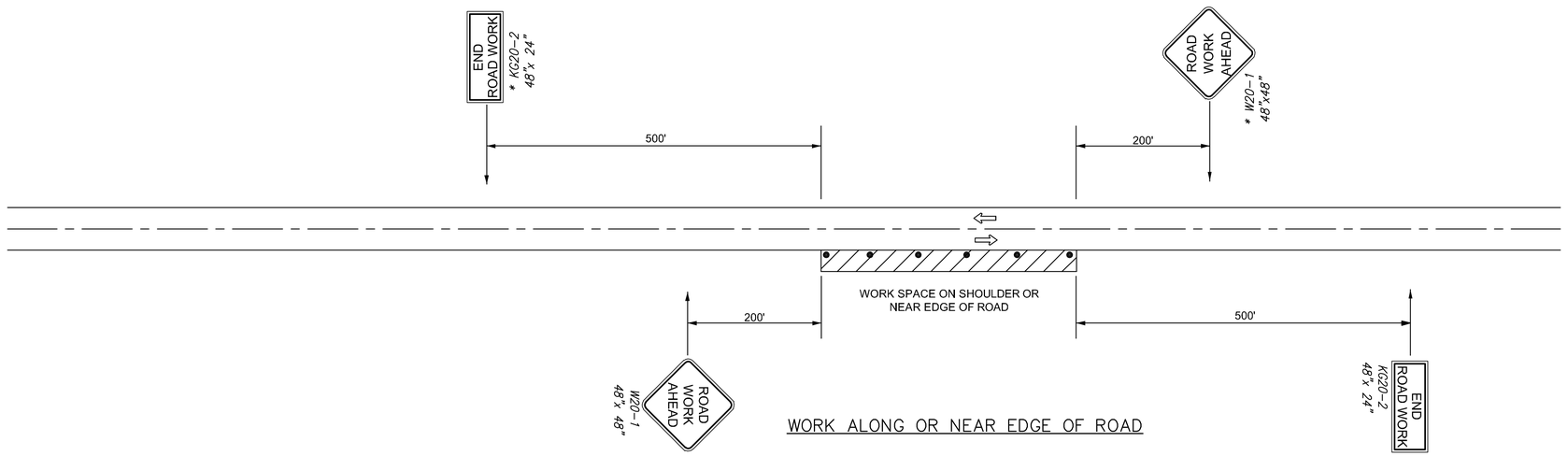

WORK ALONG OR NEAR EDGE OF ROAD

Temporary concrete barrier is to be used when open excavations are immediately adjacent to an open lane of traffic.

When work zone is 6' or more from back of curb, traffic controls is not necessary.

For operations of 60 minutes or less, all signs and channelizing devices may be eliminated if a vehicle with high-intensity, rotating, flashing, oscillating, or stroke lights is used.

* *Not Required if work zone is located on only one side of the roadway.*

LEGEND

- *Type III Barricades with lights*
- *Mount On Type III Barricade*
- *Type B Warning Light*
- *Sign*
- *Direction of Traffic*
- *Work Area*
- *Shoofly Detour*
- *Channelizer*
- *Mount Overhead on Signal Cross-arm*
- *Temporary Asphalt Widening*

MKEC
Wichita, KS • 316-684-9600

STREET IMPROVEMENTS FOR

127TH STREET EAST

FROM 13TH STREET NORTH TO 21ST STREET NORTH

©2017
MKEC Engineering
All Rights Reserved
www.mkec.com
These drawings and their contents, including, but not limited to, all concepts, designs, & ideas are the exclusive property of MKEC Engineering (MKEC), and may not be used or reproduced in any way without the express consent of MKEC.

TYPICAL TRAFFIC CONTROL DETAILS

PROJECT NO.	472-85158
DATE	11/29/17
SCALE	AS SHOWN

DESIGNED	DRAWN	CHECKED
JRA	DM	JRA

NO.	REVISION	DATE

SHEET NO.

145 OF 183

Sh. No. 145

PLOTTED: Wednesday, November 29, 2017 @ 03:34PM
J:\PROJECTS\2014\140104290 - COV_-127TH E. 13TH TO 21ST\05-CIVIL\CAD\TRAFFIC\140290TED07.DWG

PLOTTED: Wednesday, November 29, 2017 @ 03:34PM

STATE	PROJECT NO.	YEAR	SHEET NO.	TOTAL SHEETS
KANSAS	472-85158	2017	146	183

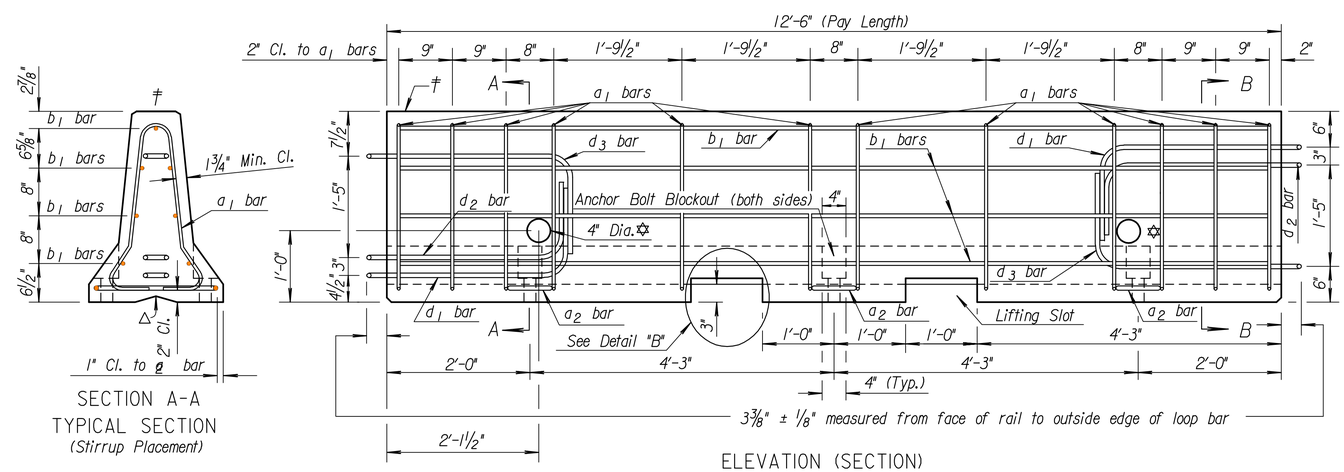

ELEVATION (SECTION)

SECTION A-A
TYPICAL SECTION
(Stirrup Placement)

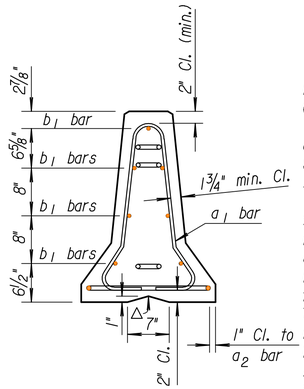

SECTION B-B
TYPICAL SECTION
(Stirrup Placement)

‡ Marked End
✡ 4" diameter - 11 gauge steel round mechanical tubing sleeve. These holes are optional.
△ V Notch is optional

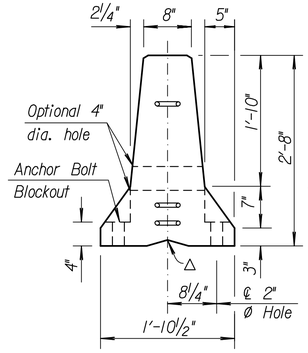

END VIEW

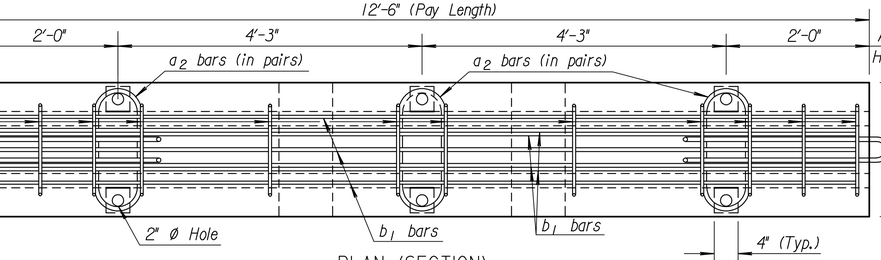

PLAN (SECTION)

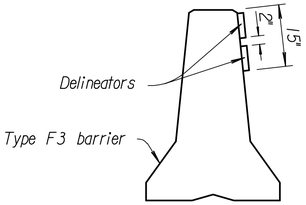

DELINEATOR DETAILS

GENERAL NOTES:

MATERIAL: Use ASTM A615, Grade 60 reinforcing bars, except for the loop bars (d_1, d_2 and d_3).

The loop bars (d_1, d_2 and d_3) shall be 3/4" smooth steel bars with a minimum yield of 60 ksi, a tensile strength of not less than 1.25 times the yield strength but a minimum of 80 ksi, a minimum 14% elongation in 8 inches, and passing a 180 degree bend test using a 3.5 D pin bend diameter. The loops shall be installed within 1/8" of the plan dimensions.

Use air-entrained concrete with f'c = 5,000 p.s.i.

SECTION: The section furnished must generally comply with dimensions shown. Requests for minor variations in section geometry and attachments may be submitted to the Engineer for approval.

LIFTING SLOTS: Lifting slots shall be constructed where specified on the plans to facilitate the drainage of water after installation on the roadway.

TEMPORARY CONCRETE SAFETY BARRIER: Furnishing and placing of all materials when required and all labor and equipment required to position the temporary barrier shall be included in the Contract unit price bid for "Concrete Safety Barrier (Type F3)(Temporary)". Any relocation of the barrier required for the project shall be paid in accordance with the Special Provisions under the bid item "Concrete Safety Barrier (Type F3) (Temporary-Relocate)". Unless otherwise noted on the Plans, the Temporary Concrete Safety Barrier shall become the property of the Contractor and shall be removed from the site upon acceptance of the completed project.

Approximate weight of one unit equals 2.7 tons.

SURFACE PREPARATION: Barrier shall be placed on a paved surface. All loose dirt and sand shall be removed from the roadway surface just prior to placement of the barrier.

MARKING: The left end (‡) of each barrier shall be permanently marked by stamping or forming into the barrier the following information:

- *Type F3*
- *Manufacturer code (as specified by KDOT Bureau of Const. & Maint.)*
- *Date manufactured (month and year)*

DELINEATION: Delineators shall be spaced on 50' centers, except through curves having 1900' or greater curvature where they shall be spaced on 25' centers.

The delineation shall be mounted on the side of the Temporary Concrete Safety Barrier with two delineators at each location. Each delineator shall have a minimum height-to-width ratio of 1.75, and a minimum reflective surface area of 7 sq. in.. The delineators shall be affixed to the Temporary Concrete Safety Barrier as recommended by the manufacturer.

Delineators shall be attached to bridge rail or other structures in construction zones when roadway is narrowed and traffic is adjacent to the structure. The method and location of placement shall be similar to permanent barrier delineation.

When traffic flow is in one direction, the delineators shall be yellow when used on the left,white when used on the right. When traffic flow is in both directions delineators shall be placed back-to-back, and shall correspond to the color of the edge line.

The work and materials required for the installation of delineators as mentioned shall be subsidiary to the bid item "Concrete Safety Barrier (Type F3) (Temporary).

If necessary, include Standard Drawing RD622A for Taper Section, Standard drawing RD622B for anchor and tie down details, Standard Drawing RD622C for Bridges with thermal expansion of 1 1/2" or greater and Standard Drawing RD622D for Barrier Layouts.

The Contractor shall be responsible for maintaining a clear area, shown as dimension "A" on Standard Drawing RD622B. The clear area is located behind the Temporary Concrete Safety Barrier and shall be kept free of any equipment, material stockpiles or other obstacles. For non-anchored roadway applications, dimension "A" shall be a minimum of 2'-0".

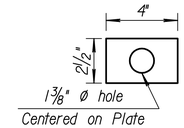

(½" Top Plate Detail)

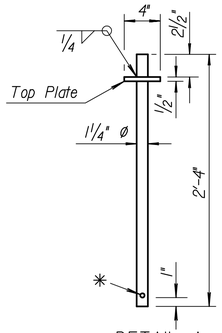

DETAIL A
CONNECTION PIN
(A36 Steel) 10.9 lbs. each
✳ ⅝" Ø hole for retainer bolt. The retainer bolt & nut are installed at Contractor's option.
Note: Retainer bolt & nut required with Tie Down Strap.

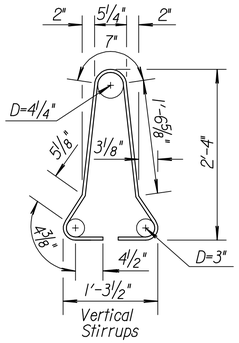

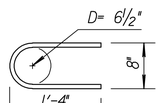

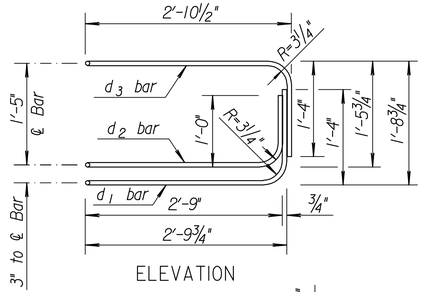

ELEVATION

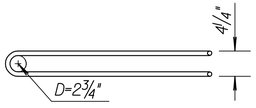

PLAN

LOOP BAR ASSEMBLY
(Marked end shown, invert for other end)
(Material as stated in General Notes)

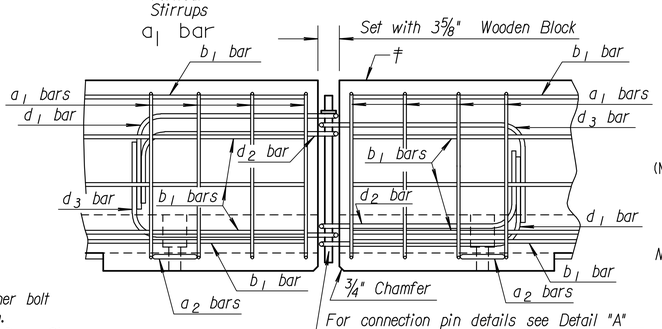

DETAILS OF BARRIER CONNECTION

NOTE: At no time shall the barriers be lifted, moved, etc. by use of the loop bars: d_1, d_2 or d_3.

Per 12'-6" Barrier Section

REINFORCING A615 Gr. 60					
Bar	Bar Size	Shape	No. of Bars	Length Ft.	Weight Lbs.
a_1	#4		12	6'-0"	48.1
a_2	#6		6	2'-11"	26.3
b_1	#5		7	12'-2"	88.8
LOOP ASSEMBLY					
d_1	#6		2	8'-5"	25.3
d_2	#6		2	7'-7"	22.8
d_3	#6		2	8'-6"	25.5

Concrete Quantity = 1.3 C.Y.
(Dimensions are out to out of bars unless otherwise noted.)

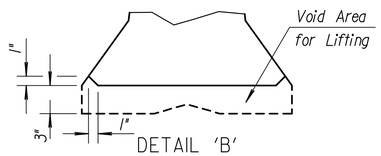

DETAIL 'B'

LIFTING SLOT DETAIL
(1" Chamfer to prevent spalling)

NO.	DATE	REVISIONS	BY	APP'D
5	8-27-15	Added Note, Pay Length	K.E.K.	S.W.K.
4	5-17-13	Revised General Note, Clear Area	S.W.K.	J.O.B.
3	06-03-12	Revised General Note, Clear Area	S.W.K.	J.O.B.
2	02-06-07	Revised additional sheets note	S.W.K.	J.O.B.
1	01-10-07	Rev. layout & notes, add. Delineation	S.W.K.	J.O.B.

KANSAS DEPARTMENT OF TRANSPORTATION

TEMPORARY CONCRETE SAFETY BARRIER TYPE F3

RD622

FHWA APPROVAL	10-18-13	APP'D. James O. Brewer	
DESIGNED	DETAILED	QUANTITIES	TRACED Bowser
DESIGN CK.	DETAIL CK.	QUAN.CK.	TRACE CK. King

J:\PROJECTS\2014\1401040290 - COW_127TH E 13TH TO 21ST\05-CIVIL\CAD\TRAF\1402900RD622.DWG

PLOTTED: Wednesday, November 29, 2017 @ 03:35PM

STATE	PROJECT NO.	YEAR	SHEET NO.	TOTAL SHEETS
KANSAS	472-85158	2017	147	183

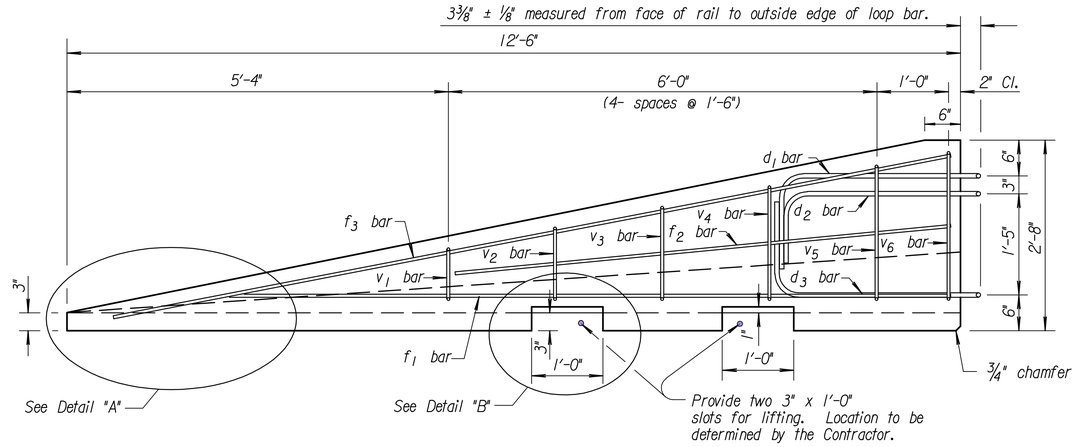

ELEVATION (SECTION)
(For connection to left end of Barrier)

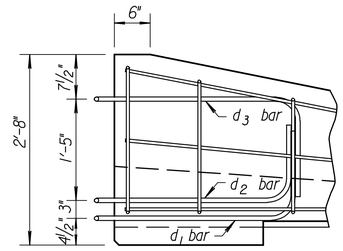

ELEVATION (SECTION)
(For connection to right end of Barrier)

GENERAL NOTES:

MATERIAL: Use ASTM A615, Grade 60 reinforcing bars, except for the loop bars (d_1, d_2 and d_3). The loop bars (d_1, d_2 and d_3) shall be ¾" smooth steel bars with a minimum yield of 60 ksi, a tensile strength of not less than 1.25 times the yield strength but a minimum of 80 ksi, a minimum 14% elongation in 8 inches, and passing a 180 degree bend test using a 3.5" D pin bend diameter. The loops shall be installed within ⅛" of the plan dimensions.
Use air-entrained concrete with f'c = 5,000 p.s.i.

SECTION: The section furnished must generally comply with dimensions shown. Requests for minor variations in section geometry and attachments may be submitted to the Engineer for approval.

LIFTING SLOTS: Lifting slots shall be constructed where specified on the plans to facilitate the drainage of water after installation on the roadway.

TEMPORARY CONCRETE SAFETY BARRIER: One section of Taper Barrier shall be bid as one section of Type F3 Barrier. Type F3 barrier taper sections shall be used only for low speed (40 mph or less) applications or where a barrier terminates beyond the roadway clear zone. Where a barrier terminates within the clear zone of a high speed roadway, an appropriate impact attenuator shall be installed on the approach end. Furnishing and placing of all materials when required and all labor and equipment required to position the temporary barrier shall be included in the Contract unit price bid for "Concrete Safety Barrier (Type F3)(Temporary)". Any relocation of the barrier required for the project shall be paid in accordance with the Special Provisions under the bid item "Concrete Safety Barrier (Type F3)(Temporary-Relocate)". Unless otherwise noted on the Plans, the Temporary Concrete Safety Barrier shall become the property of the Contractor and shall be removed from the site upon acceptance of the completed project. Approximate weight of one unit equals 1.3 tons.

SURFACE PREPARATION: Barrier shall be placed on a paved surface. All loose dirt and sand shall be removed from the roadway surface just prior to placement of the barrier.

MARKING: Each barrier shall be permanently marked by stamping or forming into the barrier the following information:
- Type F3
- Manufacturer code (as specified by KDOT Bureau of Const. & Maint.)
- Date manufactured (month and year)

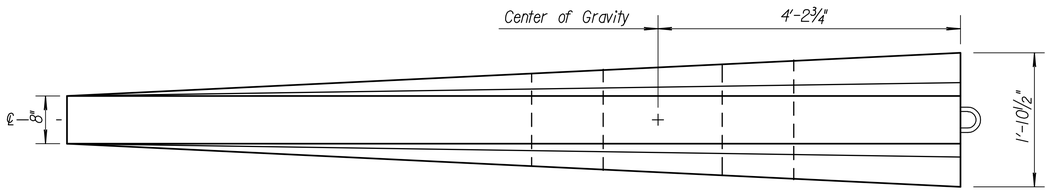

PLAN

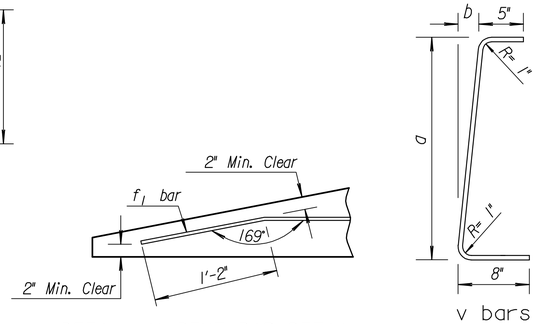

DETAIL "A" BENT BAR DETAIL

v bars

2 at each size required for stirrup assembly

Bar	a	b
v_1	10"	1"
v_2	1'-1"	1¼"
v_3	1'-5"	1⅝"
v_4	1'-8"	1⅞"
v_5	2'-0½"	2⅜"
v_6	2'-3"	2¾"

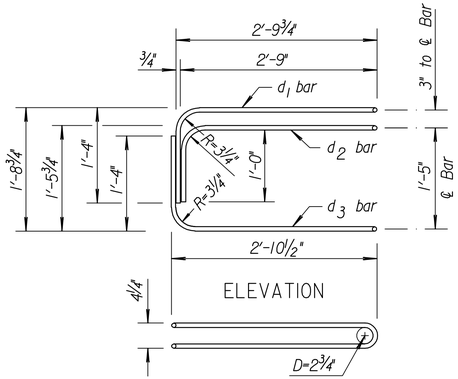

ELEVATION

PLAN
LOOP BAR ASSEMBLY
(Left Barrier Connection shown, invert for other end)

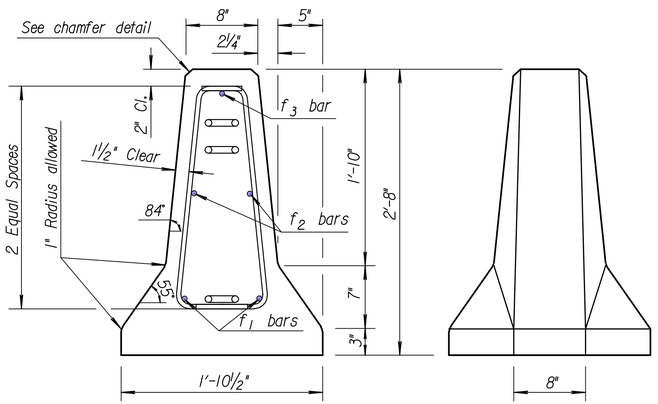

END SECTION

END VIEW

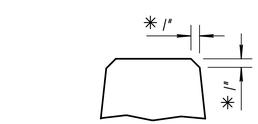

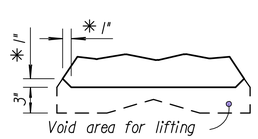

DETAIL "B" LIFTING SLOT DETAIL
* 1" Chamfer to prevent spalling

Per 12'-6" Barrier Taper Section

REINFORCING A615 Gr. 60					
Bar	Bar Size	Shape	No. of Bars	Length ft.	Weight lbs.
v_1	#4	[	2	1'-11"	2.6
v_2	#4	[	2	2'-2"	2.9
v_3	#4	[	2	2'-6"	3.3
v_4	#4	[	2	2'-9"	3.7
v_5	#4	[	2	3'-2"	4.2
v_6	#4	[	2	3'-4"	4.5
f_1	#4	——	2	12'-0"	16.0
f_2	#4	——	2	7'-6"	10.0
f_3	#5	——	1	11'-9"	12.3
LOOP ASSEMBLY					
d_1	#6	⌐¬	1	8'-5"	12.6
d_2	#6	⌐¬	1	7'-7"	11.4
d_3	#6	⌐¬	1	8'-6"	12.8

Concrete Quantity = 0.6 C.Y.

Note: At no time shall the barriers be lifted, moved, etc. by use of the loop bars: d_1, d_2 or d_3.

NO.	DATE	REVISIONS	BY	APP'D
3				
2				
1	1-10-07	Revised layout & notes	S.W.K.	J.O.B.

KANSAS DEPARTMENT OF TRANSPORTATION

TEMPORARY CONCRETE SAFETY BARRIER TAPER SECTION TYPE F3

RD622A

FHWA APPROVAL	01-19-07	APP'D. James O. Brewer	
DESIGNED	DETAILED	QUANTITIES	TRACED B.N.B.
DESIGN CK.	DETAIL CK.	QUAN.CK.	TRACE CK. S.W.K.

KDOT Graphics Certified 07-22-2010 Sh. No. 147

KDOT Graphics Certified

J:\PROJECTS\2014\1401040290 - COW_127TH E 13TH TO 215TS\05-CIVIL\CAD\TRAF\14290RD622A.DWG

Option	BRIDGE DECK APPLICATION	
1	B 0′ ≤ A < 2′	Anchor each barrier with 3 bolts on traffic face
2 B	△2′ ≤ A < 4′	Anchor with Tie-down strap connector
3 B	A ≥ 4′	No anchorage required unless shown on plans

Option	ROAD PAVEMENT APPLICATION	
1 R	0" ≤ A < 2′	Anchor each barrier with 3-bolts on traffic face
2 R	6" ≤ A < 2′	Anchor with Tie-down Strap or Staked Down (flexible)
3 R	A ≥ 2′	No anchorage required

△ *This dimension may be reduced to 1′ on a newly constructed Bridge Deck.*

Note: BRIDGE APPLICATION (Opt. 1 B) may be used in lieu of (Opt. 2 B) with prior approval from the State Bridge Office.

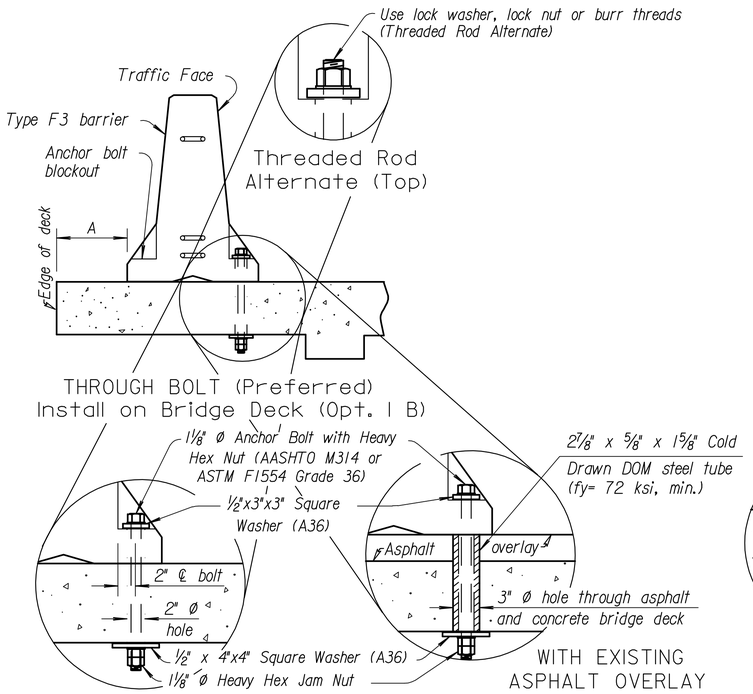

THROUGH BOLT (Preferred)
Install on Bridge Deck (Opt. 1 B)

WITH EXISTING ASPHALT OVERLAY

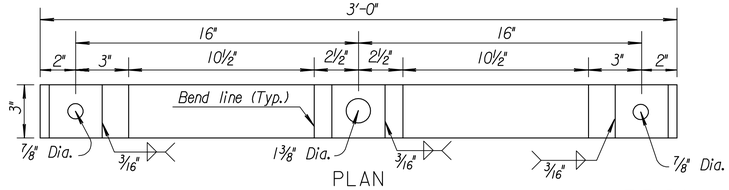

PLAN

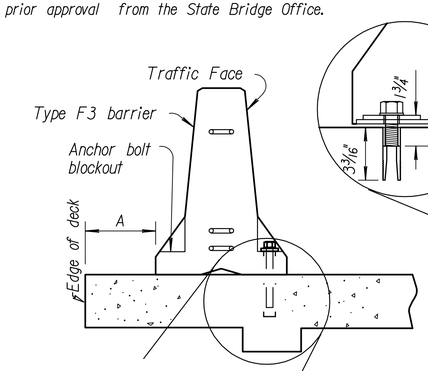

◆Alt. DRILLED AND GROUTED ANCHOR
Bridge Deck (Opt. 1 B)
or Ridgid Pavement (Opt. 1 R)

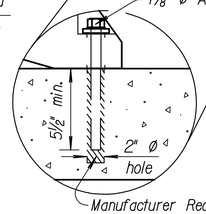

◆ *Note: Alternate Drilled and Grouted Anchor installation avoids damage to the support beams, girders or expansion joint. The State Bridge Office shall approve the use of the Alternate Drilled and Grouted Anchor installation for Opt. 1B applications.*

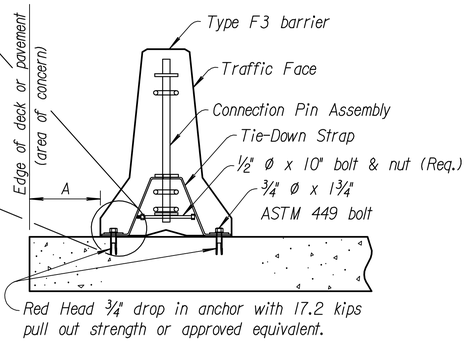

TIE-DOWN STRAP
Rigid Pavement (Opt. 2 R) or
Bridge Deck (Opt. 2 B)

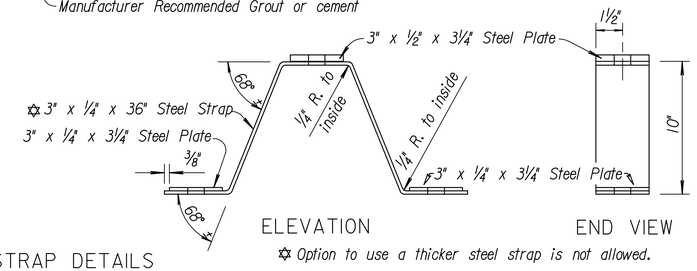

TIE-DOWN STRAP DETAILS

✡ *Option to use a thicker steel strap is not allowed.*

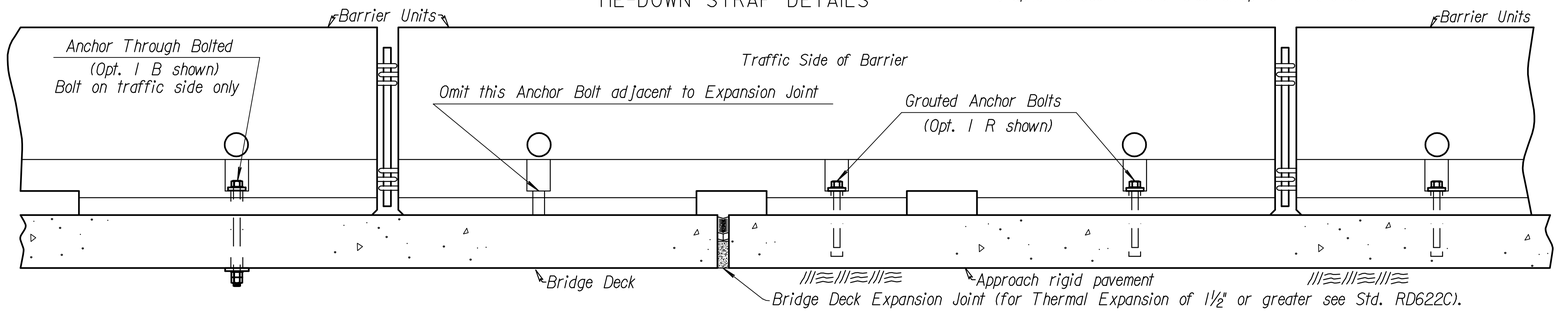

ELEVATION

TREATMENT AT BRIDGE DECK EXPANSION JOINT SCHEMATIC (Expansion < 1½")

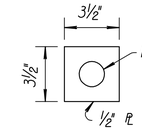

STOP PLATE DETAIL

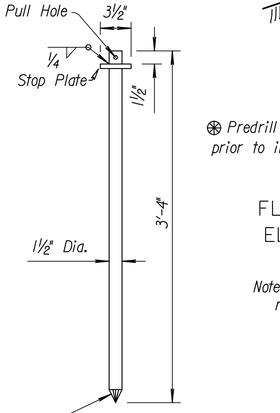

STAKE DETAIL

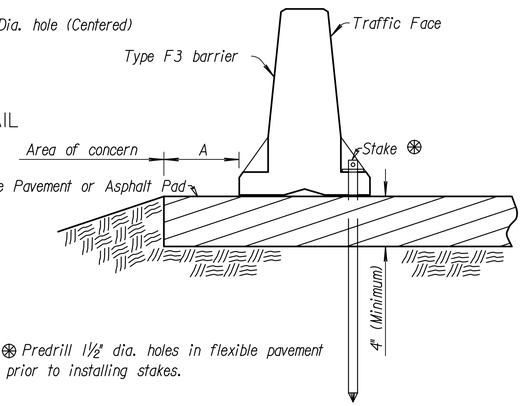

⊛ *Predrill 1½" dia. holes in flexible pavement prior to installing stakes.*

FLEXIBLE PAVEMENT ROAD APPLICATION
ELEVATION - STAKED DOWN (Opt. 2 R)

Note: See Std. Drawing No. RD622 for details and quantities not shown on this sheet.

NO.	DATE	REVISIONS	BY	APP'D
6	12-31-13	Rev. Note (Alt. Drill. & Grout. Anch.)	S.W.K.	J.O.B.
5	6-27-11	Revised General Note	S.W.K.	J.O.B.
4	9-14-10	Add. through bolt with asphalt over	S.W.K.	J.O.B.
3	2-2-10	Rev. Anchor to Tie-down callout	S.W.K.	J.O.B.

STATE	PROJECT NO.	YEAR	SHEET NO.	TOTAL SHEETS
KANSAS	472-85158	2017	148	183

GENERAL NOTES:

INSTALLATION: Holes into the pavement to anchor the concrete safety barrier may be drilled after positioning barrier. Install barrier with through anchor bolt where possible, use grouted anchor bolts where through bolt can't be used. Do not drill into or otherwise damage support beams, girders, or or expansion joints. All work and materials required for the installation of the anchors are subsidiary to the bid item "Concrete Safety Barrier".

UTILITIES & STRUCTURES (Stakes) Verify buried utilities and structures within stake depth. If conflicts between stakes and buried elements exist, up to 2 stakes maximum in a single barrier may be omitted if adjacent barriers have 3 stakes each.

ANCHORAGE: Use galvanized grouted anchor bolts, through anchor bolts, nuts & washers that meet standard specifications.

Install three anchor bolts or asphalt pins per barrier on the traffic side except on transition barrier as shown.

BARRIER REMOVAL: Remove grouted or wedge anchor system by drilling the anchor with a core barrel 2x the diameter of the insert. Core to a depth equal to the installed depth and remove the core, prepare the hole by removing any dust and debris. Fill hole with material that meets KDOT Prequalified "Non-shrink grouts for grouting anchor bolts and reinforcing into previously poured concrete". Follow the manufacturer's procedures for mixing, hole preparation and curing.

To fill through bolt anchor, remove and completely fill the hole using instructions for drop-In anchors except no coring is required.

For removed or relocated barrier on flexible pavement, fill stake holes completely with hot or cold asphalt patch material.

Work and materials required to remove and patch anchor holes is subsidiary to the bid item "Concrete Safety Barrier".

SIGNING: For sign spacing, traffic control device details and reference notes, see Index of Sheets.

TEMPORARY BARRIERS: Temporary Barriers shown in the details of this drawing are not allowed for permanent installations.

See RD622D for transition details between anchored and free-standing barriers.

KANSAS DEPARTMENT OF TRANSPORTATION

TEMPORARY CONCRETE SAFETY BARRIER TYPE F3 ANCHORAGE

RD622B

FHWA APPROVAL	9-4-14	APP'D. James O. Brewer	
DESIGNED	DETAILED	QUANTITIES	TRACED Bowser
DESIGN CK.	DETAIL CK.	QUAN.CK.	TRACE CK. King

KDOT Graphics Certified 09-16-2014 *Sh. No. 148*

KDOT Graphics Certified

PLOTTED: Wednesday, November 29, 2017 @ 03:35PM

J:\PROJECTS\2014\1401040290 - COW_127TH E 13TH TO 215TH\05-CIVIL\CAD\TRAF\1426RD622B.DWG

PLOTTED: Wednesday, November 29, 2017 @ 03:39PM

STATE	PROJECT NO.	YEAR	SHEET NO.	TOTAL SHEETS
KANSAS	87 N-0615-01	2017	149	183

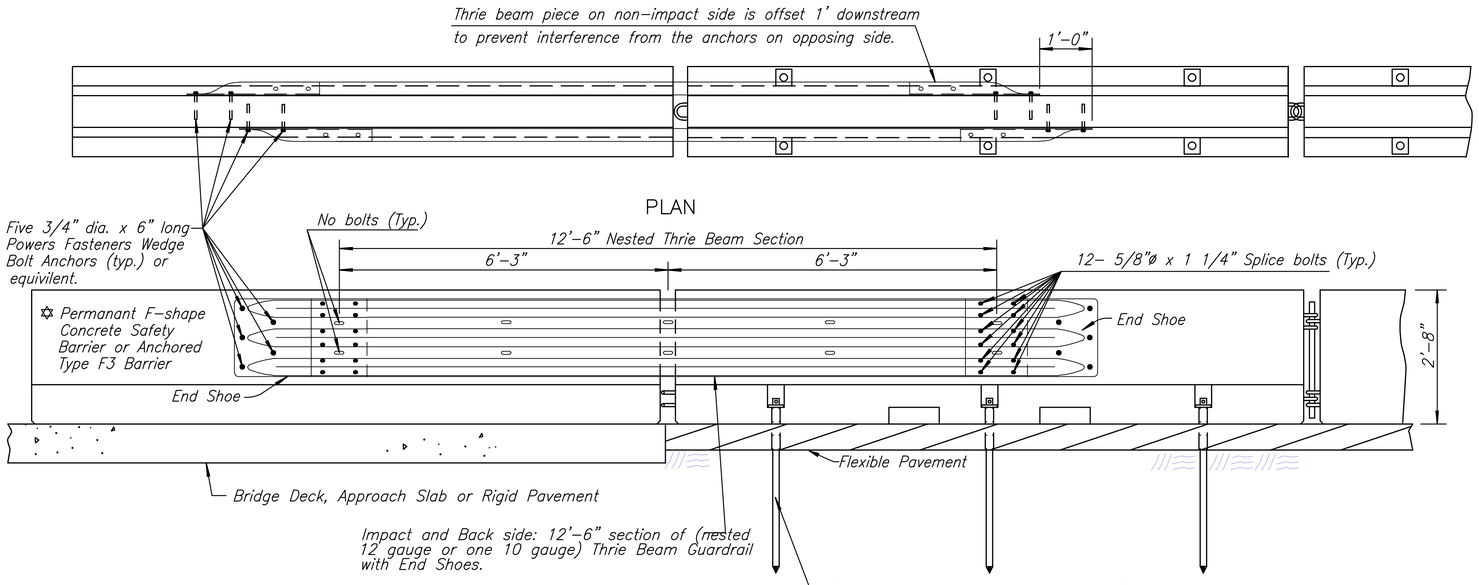

GENERAL NOTES:

The work and materials required for the installation & removal of the guardrail connection and barrier anchors as shown on this sheet shall be subsidiary to the "Concrete Safety Barrier" bid item.

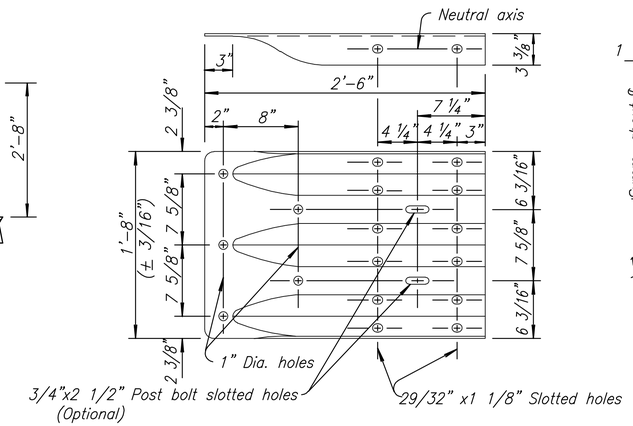

TERMINAL CONNECTOR

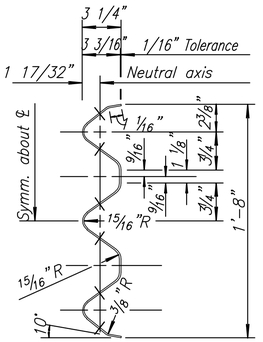

THRU RAIL ELEMENT
TYPICAL THRIE BEAM

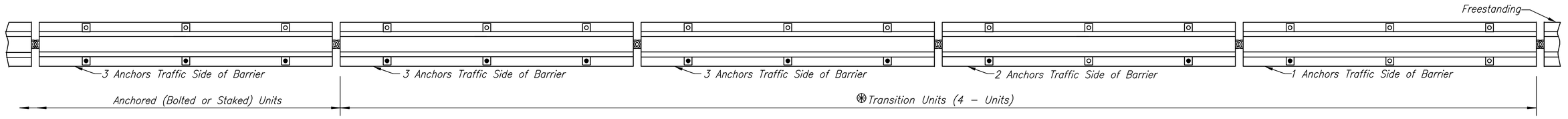

PLAN (Transition Units)

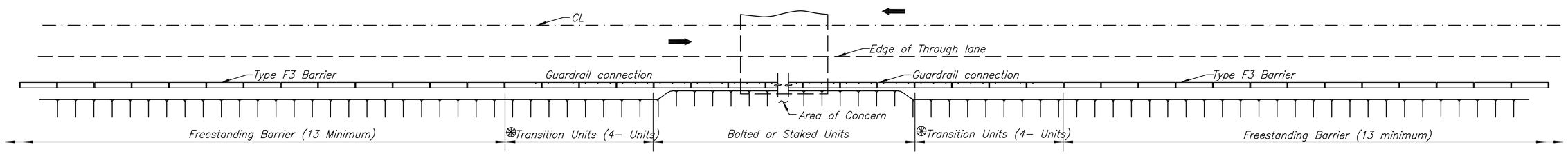

APPROACH TRANSITION FROM FREESTANDIING TO ANCHORED (BOLTED OR STAKED) TYPE F-3 CONCRETE BARRIER

TYPICAL INSTALLATIONS

1) Type F3 barrier anchored to rigid pavement with bolted connection or bolted to a bridge deck.
   -the transtion between this anchored barrier and the freestanding needs the transition barriers plus guardrail as shown above.
2) Permanent F-shape barrier
   -the transtion between this permanent barrier and the freestanding Type F3 needs the transition barriers plus guardrail as shown above.
3) Type F3 barrier anchored with straps on rigid pavement or a bridge deck
   -the transtion between this anchored barrier and the freestanding needs NO transition barriers or NO guardrail.
4) Type F3 barrier pinned/staked to aspholt pavement
   -the transtion between this anchored barrier and the freestanding needs the transition barriers but NO guardrail.

NO.	DATE	REVISIONS	BY	APP'D
3				
2				
1	1-30-07	Rem. temp. details from perm. barrier	S.W.K.	J.O.B.

KANSAS DEPARTMENT OF TRANSPORTATION

TEMPORARY CONCRETE SAFETY BARRIER TYPE F3 TRANSITION LAYOUTS

RD622D

FHWA APPROVAL	01-19-07	APP'D. James O. Brewer	
DESIGNED	DETAILED	QUANTITIES	TRACED Bowser
DESIGN CK.	DETAIL CK.	QUAN.CK.	TRACE CK. King

KDOT Graphics Certified 07-22-2010

Sh. No. 149

KDOT Graphics Certified

J:\PROJECTS\2014\1401040290 - COW -127TH E 13TH TO 215TH\05-CIVIL\CAD\TRAFFIC\1401040290RD622D.DWG

PLOTTED: Wednesday, November 29, 2017 @ 03:35PM

STATE	PROJECT NO.	YEAR	SHEET NO.	TOTAL SHEETS
KANSAS	87 N-0615-01	2017	150	183

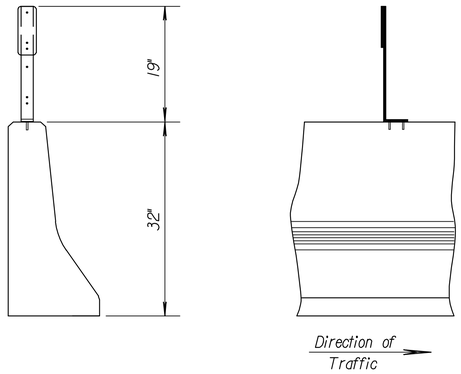

TYPICAL MOUNTING DETAIL

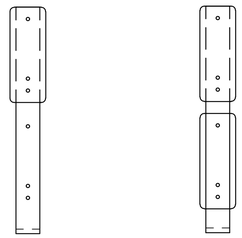

DELINEATOR POSITION DETAILS

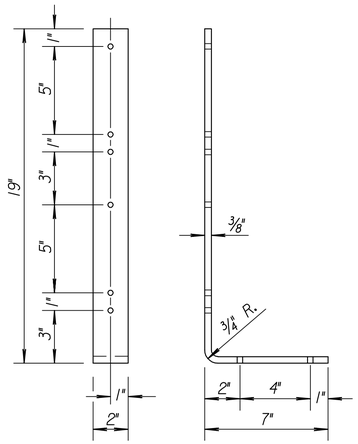

DELINEATOR BRACKET DETAILS

DESIGN DETAILS FOR DELINEATION ON 32" CONCRETE SAFETY BARRIER SECTION

GENERAL NOTES

The delineators shall be spaced on 200' centers, except through curves greater than 1900' radius curvature and along ramps and ramp tapers where the spacing shall be on 100' centers. Delineators should be installed back to back when used on 32" median barrier for two-way roadways. The delineator color shall be yellow when used on the left side or white when used on the right side of the roadway.

The flat sheet sign blank shall be made of the aluminum alloy and thickness shown.

The 3" x 8" delineator sign face shall be covered with high performance white or yellow retroreflective sheeting.

The type of adhesive for reflective sheeting shall be heat activated or pressure sensitive.

The delineator bracket shall be fabricated from aluminum in the thickness and sizes shown. The material for the brackets shall comply with the Standard Specifications. All holes for mounting the delineator to the bracket shall be 3/8" diameter. The holes for mounting the bracket to the barrier shall be 7/16" diameter. All burrs and sharp edges shall be smoothed off. The brackets shall not be fabricated by the use of welding.

All items of the fastening accessories shall be Zinc or Cadmium plated.

The machine screws, nuts, and washers used to fasten the delineator to the bracket shall comply with the Standard Specifications.

All work and materials required for the installation of the delineators shall be Subsidiary to the bid item "Concrete Safety Barrier".

When delineators are installed on median or roadside barriers approaching a bridge, they shall be installed on the bridge rail in accordance with the spacing and details on this sheet.

The color of delineation (white or yellow) shall match the color of the pavement marking edge line.

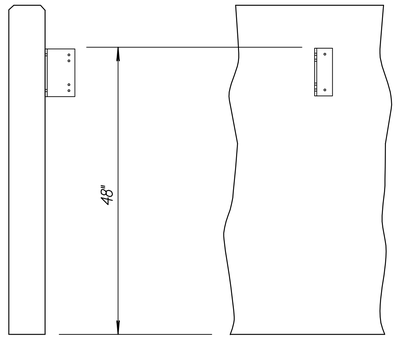

TYPICAL MOUNTING DETAIL FOR RETAINING WALL SECTION

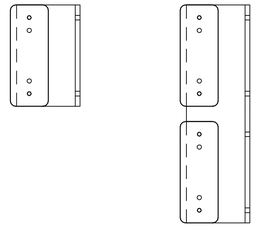

DELINEATOR POSITION DETAILS

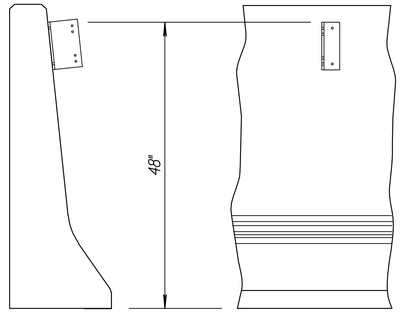

TYPICAL MOUNTING DETAIL

Road Type	Right Edge Delineator	Left Edge Delineator
Main Line	Type "A" White	Type "A" Yellow
Acceleration Lane Deceleration Lane	Type "B" White	Type "B" Yellow
Ramp	Type "A" White	Type "A" Yellow

PATTERN OF DELINEATION

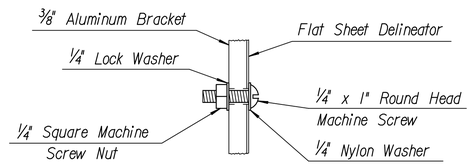

FLAT SHEET DELINEATOR MOUNTING

DETAILS FOR ATTACHING DELINEATORS TO BRACKETS

DESIGN DETAILS FOR DELINEATION ON RETAINING WALL & 51" CONCRETE SAFETY BARRIER SECTION

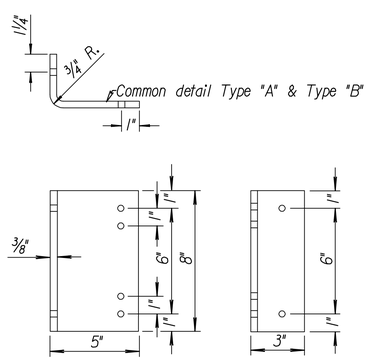

TYPE "A" DELINEATOR BRACKET DETAILS

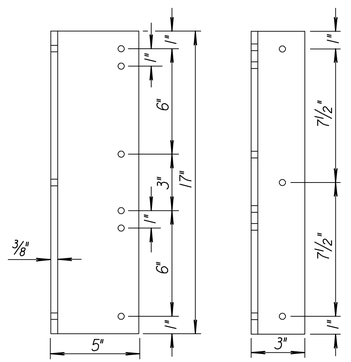

TYPE "B" DELINEATOR BRACKET DETAILS

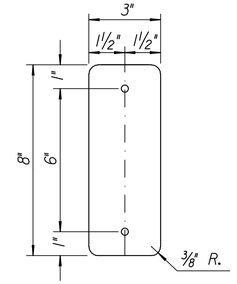

NOTE: The aluminum sign blanks are to be ASTM B-209(H), Alloy 6061-t6, or 5154-H38, or 5052-H38. The aluminum sign blank shall be 0.040" thick. Both faces and all cut edges of sign to be degreased and etched. All holes shall be 5/16" in diameter.

FLAT SHEET SIGN BLANK DETAILS

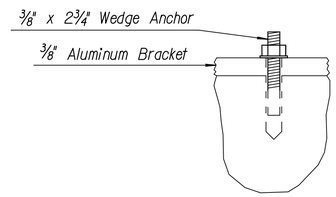

DETAILS FOR ATTACHING BRACKETS TO SAFETY BARRIER

NO.	DATE	REVISIONS	BY	APP'D
3	6-03-09	Removed button & diamond details	S.W.K.	J.O.B.
2	6-05-07	Changed degree of curve to radius	S.W.K.	J.O.B.
1	2-28-03	Revised layout and details.	S.W.K.	J.O.B.

KANSAS DEPARTMENT OF TRANSPORTATION

DESIGN DETAILS FOR DELINEATION ON CONCRETE SAFETY BARRIER

RD624

FHWA APPROVAL	12-18-09	APP'D. James O. Brewer	
DESIGNED	DETAILED	QUANTITIES	TRACED Bowser
DESIGN CK.	DETAIL CK.	QUAN.CK.	TRACE CK. King

KDOT Graphics Certified 07-22-2010

Sh. No. 150

KDOT Graphics Certified

J:\PROJECTS\2014\1040290 - COW_127TH E 13TH TO 21ST\05-CIVIL\CAD\TRAFI-1429RDR624.DWG

STATE	PROJECT NO.	YEAR	SHEET NO.	TOTAL SHEETS
KANSAS	87 N-0615-01	2017	151	183

MKEC
Wichita, KS • 316-684-9600

STREET IMPROVEMENTS FOR

127TH STREET EAST

FROM 13TH STREET NORTH TO 21ST STREET NORTH

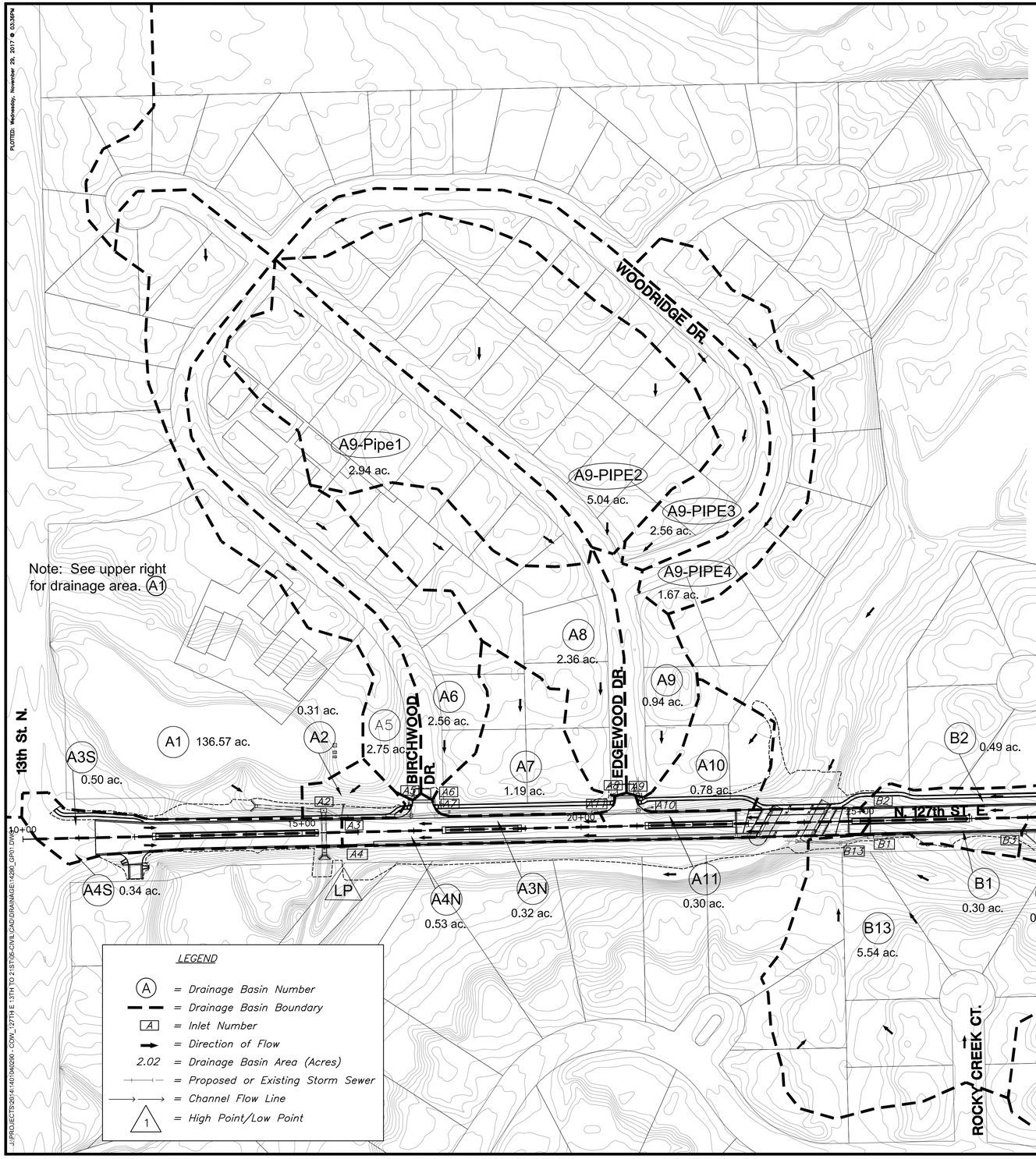

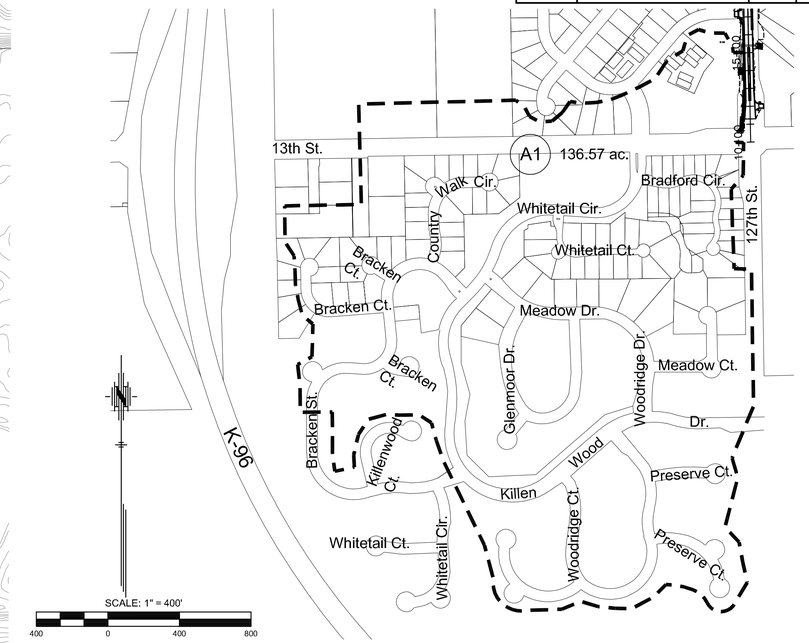

©2017
MKEC Engineering
All Rights Reserved
www.mkec.com
These drawings and their contents, including, but not limited to, all concepts, designs, & ideas are the exclusive property of MKEC Engineering (MKEC), and may not be used or reproduced in any way without the express consent of MKEC.

DRAINAGE MAP 1

PROJECT NO.	472-85158
DATE	11/29/17
SCALE	AS SHOWN

DESIGNED	DRAWN	CHECKED
JRA	LES	JRA

NO.	REVISION	DATE

SHEET NO.

151 OF 183

Sh. No. 151

PLOTTED: Wednesday, November 29, 2017 @ 03:38PM
J:\PROJECTS\2014\140194099 - COW_127TH E 13TH TO 21ST\05-CIVIL\CAD\DRAINAGE\14099_GP01.DWG

PLOTTED: Wednesday, November 29, 2017 @ 03:38PM

STATE	PROJECT NO.	YEAR	SHEET NO.	TOTAL SHEETS
KANSAS	87 N-0615-01	2017	152	183

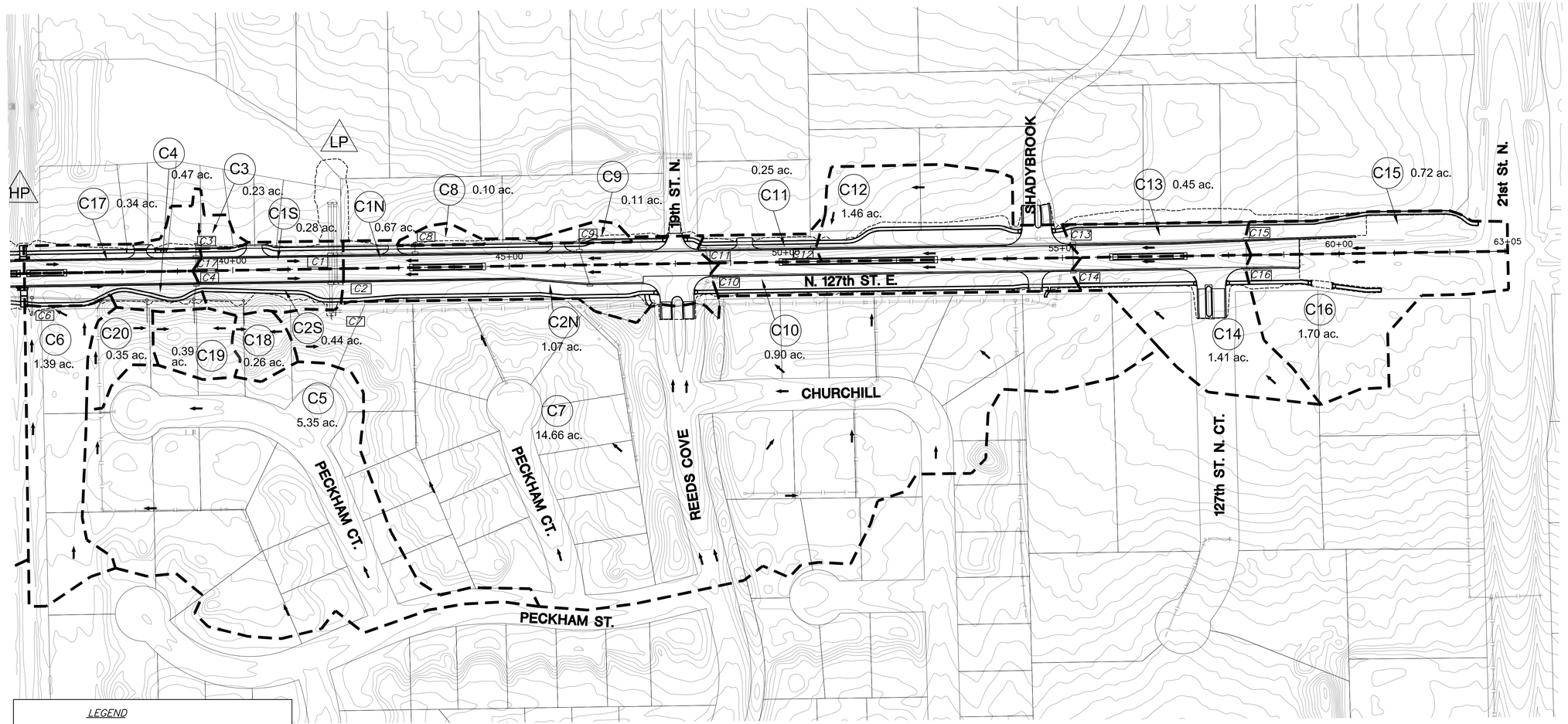

LEGEND

- (A) = *Drainage Basin Number*
- = *Drainage Basin Boundary*
- [A] = *Inlet Number*
- = *Direction of Flow*
- 2.02 = *Drainage Basin Area (Acres)*
- = *Proposed or Existing Storm Sewer*
- = *Channel Flow Line*
- (1) = *High Point/Low Point*

SCALE: 1" = 100'

100 0 100 200

MKEC
Wichita, KS • 316-684-9600

STREET IMPROVEMENTS FOR

127TH STREET EAST

FROM 13TH STREET NORTH TO 21ST STREET NORTH

©2017
MKEC Engineering
All Rights Reserved
www.mkec.com
These drawings and their contents, including, but not limited to, all concepts, designs, & ideas are the exclusive property of MKEC Engineering (MKEC), and may not be used or reproduced in any way without the express consent of MKEC.

DRAINAGE MAP 2

PROJECT NO.	472-85158
DATE	11/29/17
SCALE	AS SHOWN

DESIGNED	DRAWN	CHECKED
JRA	LES	JRA

NO.	REVISION	DATE

SHEET NO.

152 OF 183

Sh. No. 152

J:\PROJECTS\2014\0194090 - COW_127TH E 13TH TO 21ST\05-CIVIL\CAD\DRAINAGE\14290_GP02.DWG

STATE	PROJECT NO.	YEAR	SHEET NO.	TOTAL SHEETS
KANSAS	87 N-0615-01	2017	153	183

70 60 50 40 30 20 10 ℄ 10 20 30 40 50 60 70 80

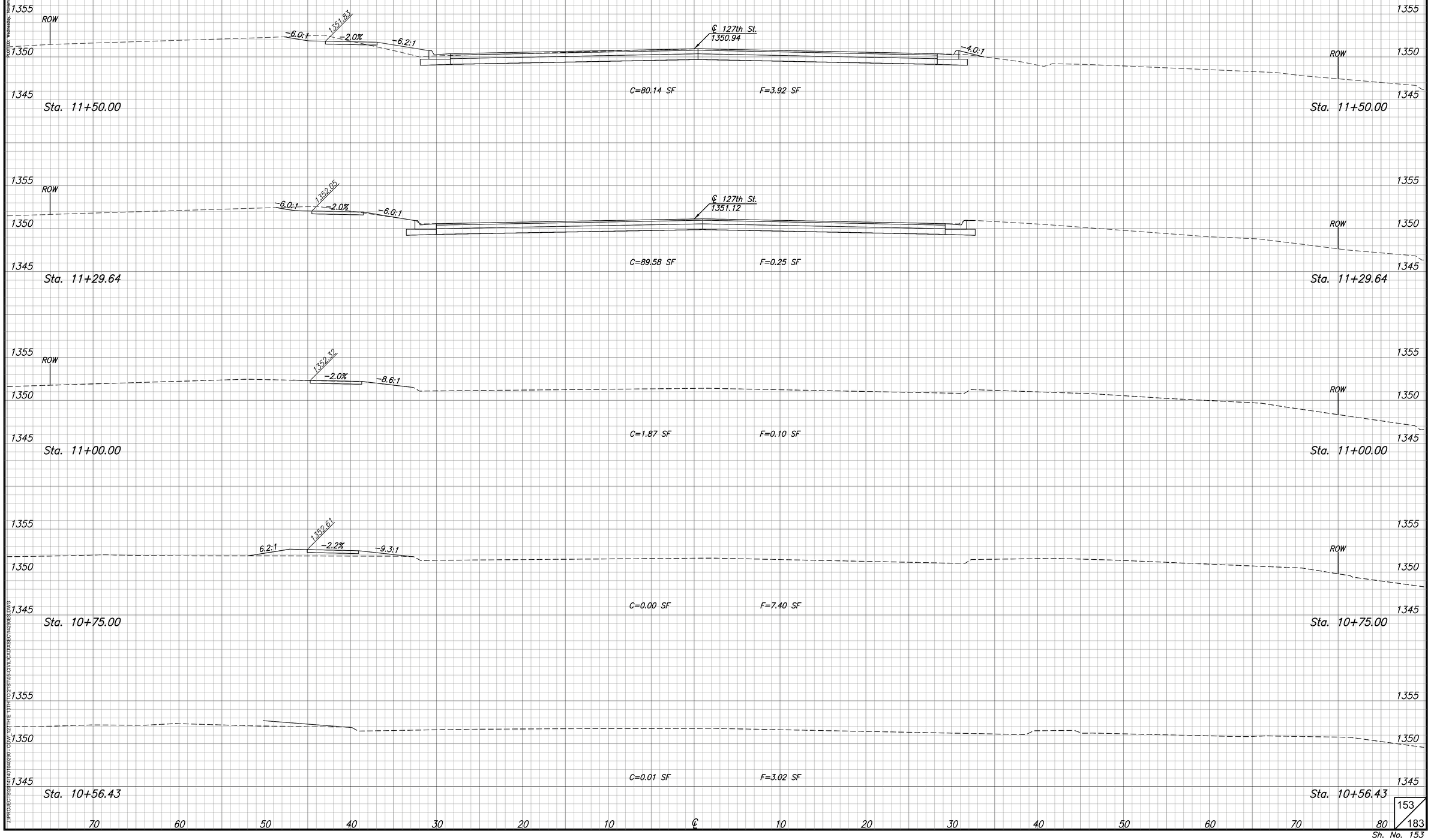

70 60 50 40 30 20 10 ℄ 10 20 30 40 50 60 70 80

153/183

Sh. No. 153

PLOTTED: Wednesday, November 29, 2017 @ 02:09PM
J:\PROJECTS\2014\1401340280 - CDW_12TH E 13TH TO 21ST\06-CIVIL\CAD\XSEC\1429BES2.DWG

STATE	PROJECT NO.	YEAR	SHEET NO.	TOTAL SHEETS
KANSAS	87 N-0615-01	2017	154	183

PLOTTED: Wednesday, November 29, 2017 @ 02:09PM

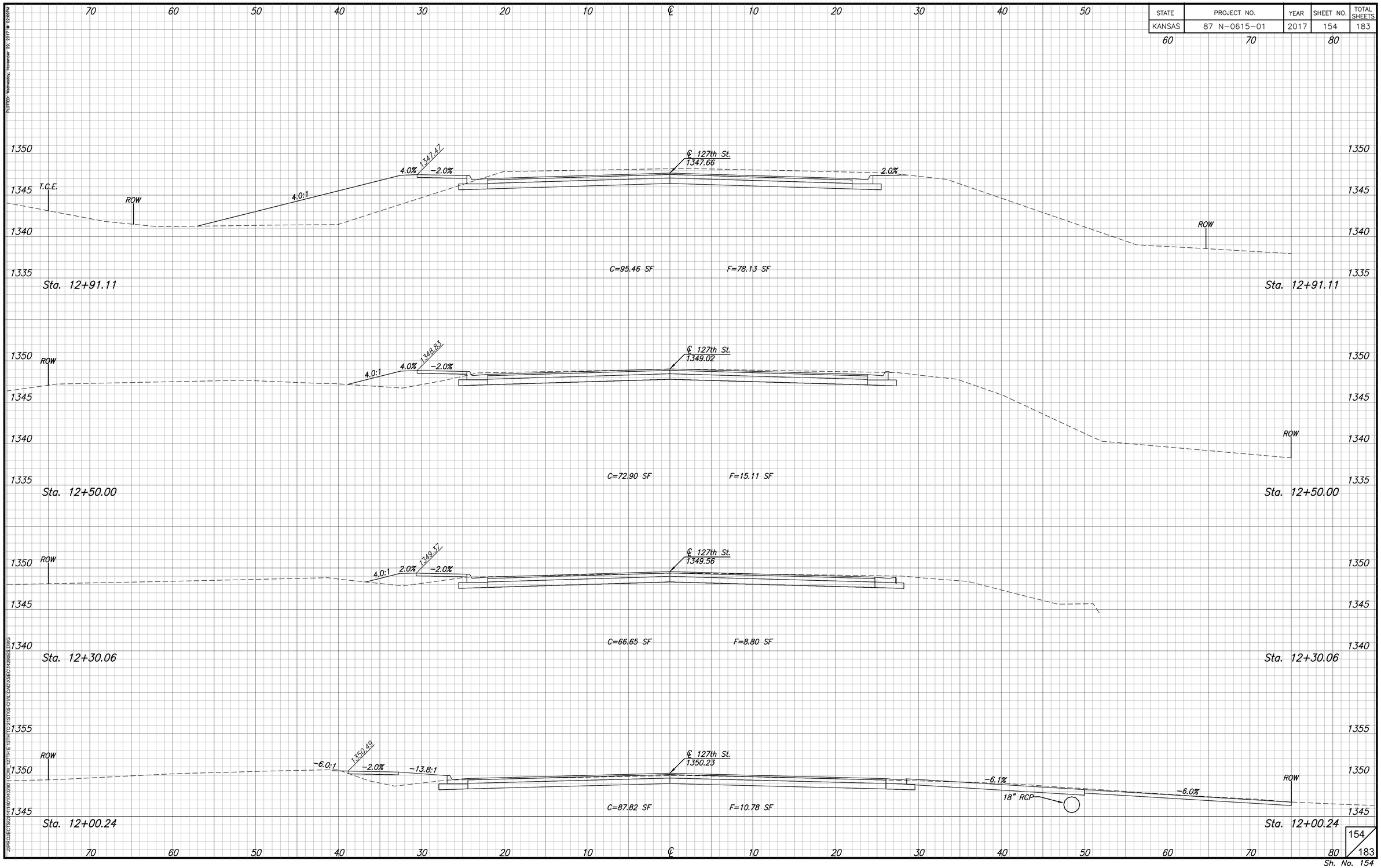

J:\PROJECTS\2014\4016402901\CDW_127TH E 13TH TO 21ST\05-CIVIL\CADD\XSECT\1429RES.DWG

STATE	PROJECT NO.	YEAR	SHEET NO.	TOTAL SHEETS
KANSAS	87 N-0615-01	2017	155	183

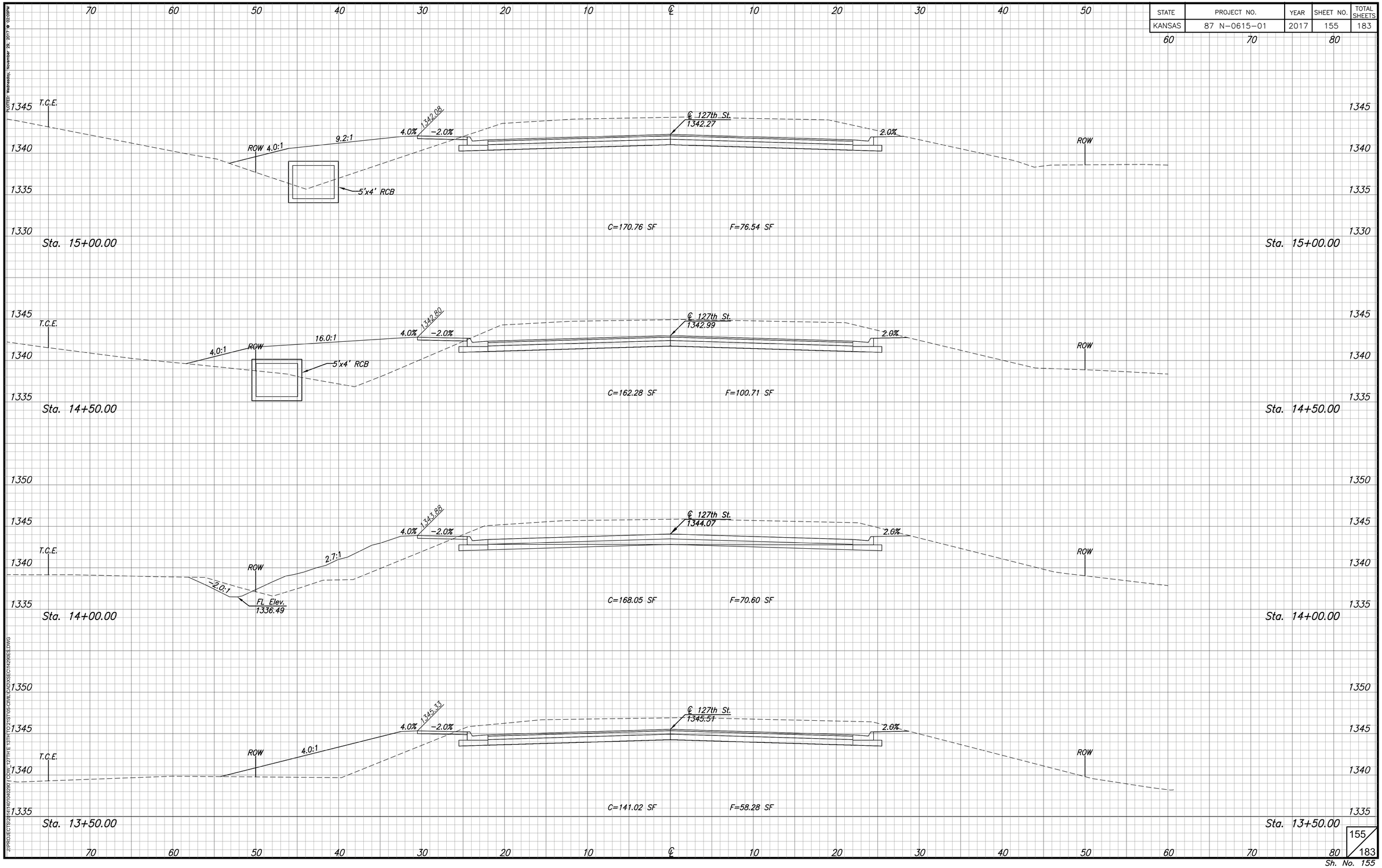

PLOTTED: Wednesday, November 29, 2017 @ 02:09PM

J:\PROJECTS\2014\0194\0967\CDOW_127TH E 131TH TO 215TH\5-CIVIL\CAD\XSECT\1429RES.DWG

155/183

Sh. No. 155

STATE	PROJECT NO.	YEAR	SHEET NO.	TOTAL SHEETS
KANSAS	87 N-0615-01	2017	156	183

PLOTTED: Wednesday, November 29, 2017 @ 02:09PM

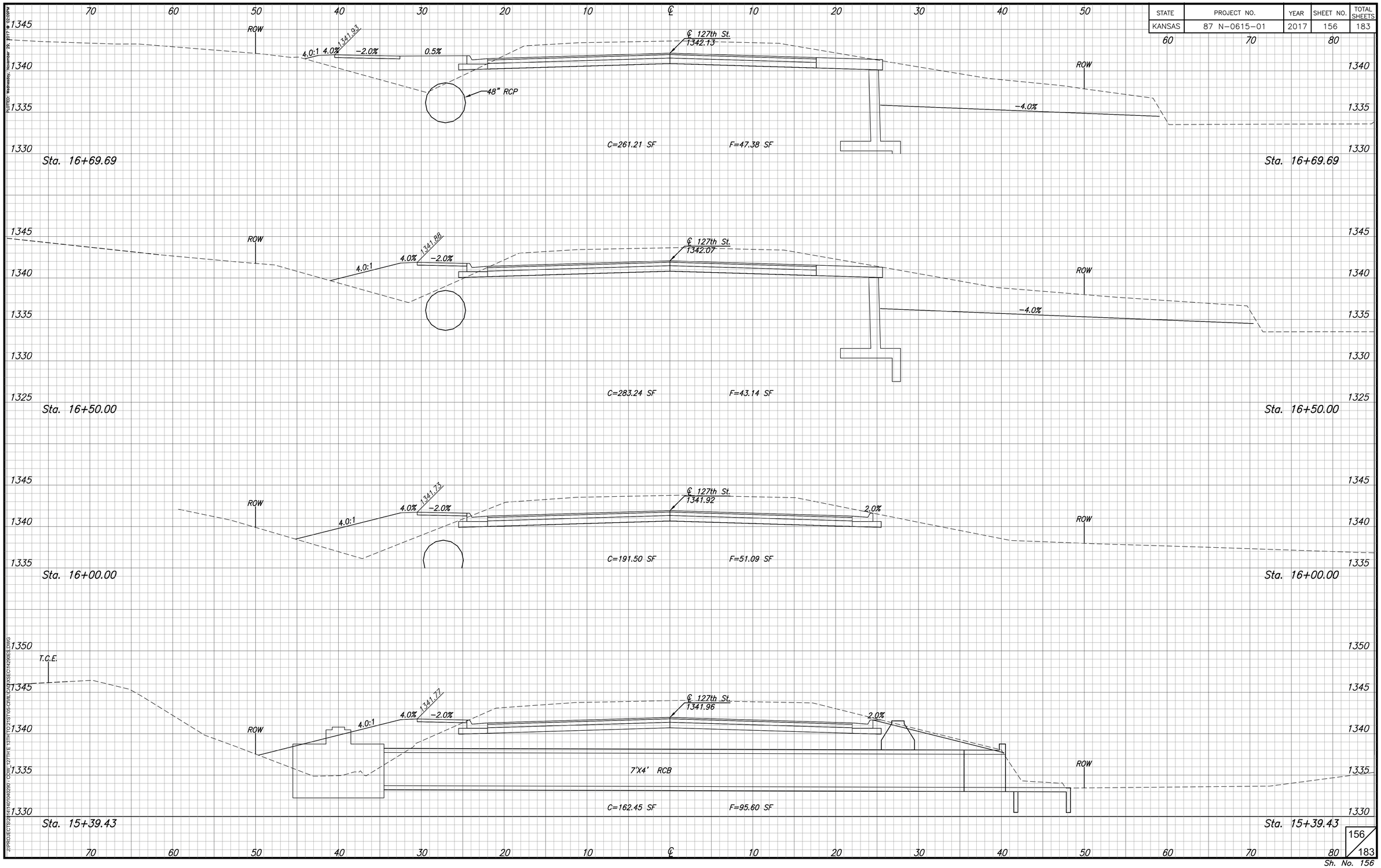

J:\PROJECTS\2014\0104290 - CDW_127TH E 131TH TO 215TH\5-CIVIL\CAD\XSECTH429RES.DWG

PLOTTED: Wednesday, November 29, 2017 @ 02:09PM

STATE	PROJECT NO.	YEAR	SHEET NO.	TOTAL SHEETS
KANSAS	87 N-0615-01	2017	157	183

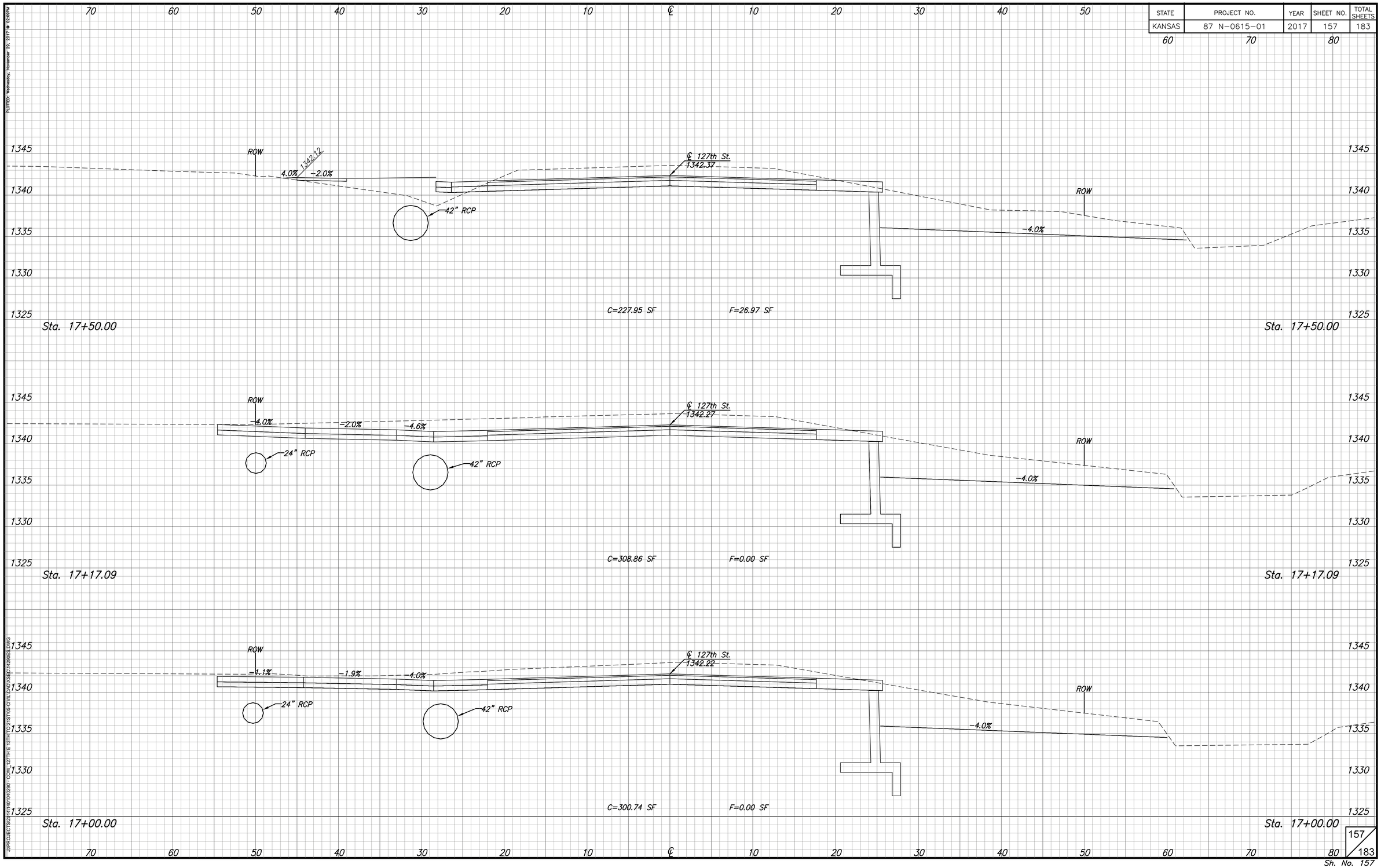

J:\PROJECTS\2014\0104290 - CDOT_127TH E 131TH TO 215TH\5-CIVIL\CADD\XSEC\1429XES.DWG

PLOTTED: Wednesday, November 29, 2017 @ 02:09PM

STATE	PROJECT NO.	YEAR	SHEET NO.	TOTAL SHEETS
KANSAS	87 N-0615-01	2017	158	183

70 60 50 40 30 20 10 ℄ 10 20 30 40 50 60 70 80

1345 1340 1335 1330 1325

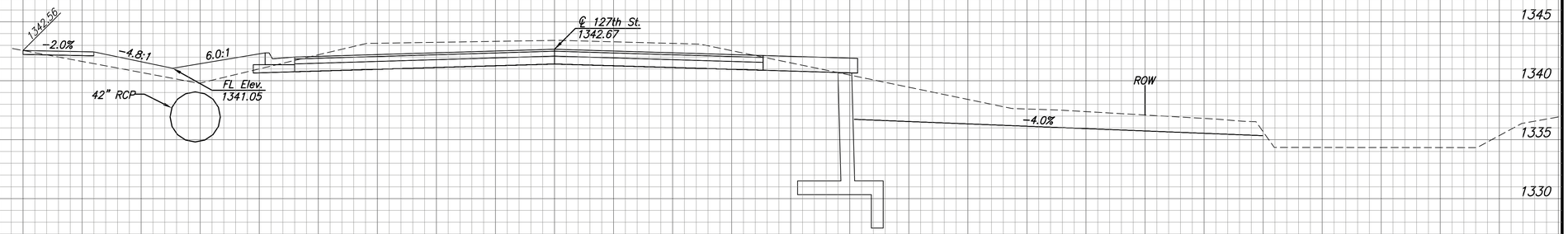

C=168.22 SF F=17.09 SF

Sta. 18+50.00 Sta. 18+50.00

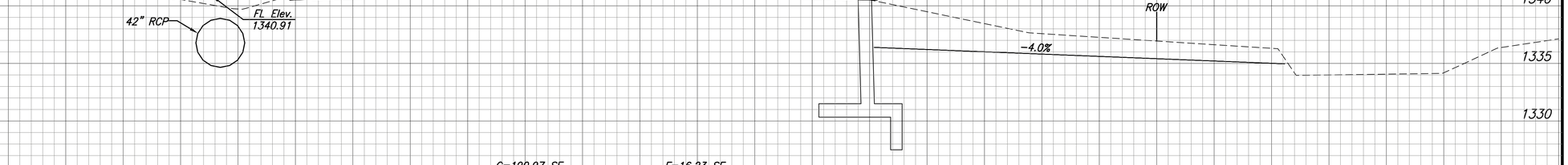

C=190.97 SF F=16.23 SF

Sta. 18+00.00 Sta. 18+00.00

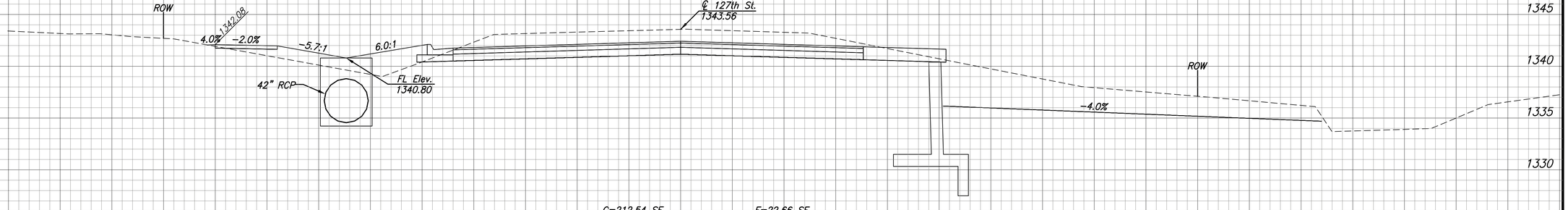

C=212.54 SF F=22.66 SF

Sta. 17+64.49 Sta. 17+64.49

J:\PROJECTS\2014\4016\40290 - CDOT_127TH E 131TH TO 21ST\05-CIVIL\CADD\XSECT\1429RES.DWG

158/183

Sh. No. 158

STATE	PROJECT NO.	YEAR	SHEET NO.	TOTAL SHEETS
KANSAS	87 N-0615-01	2017	159	183

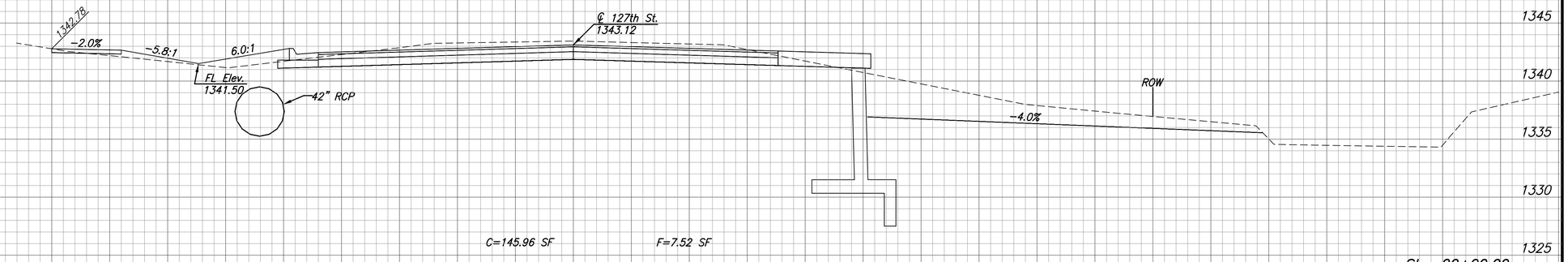

Sta. 20+00.00

C=145.96 SF

F=7.52 SF

Sta. 20+00.00

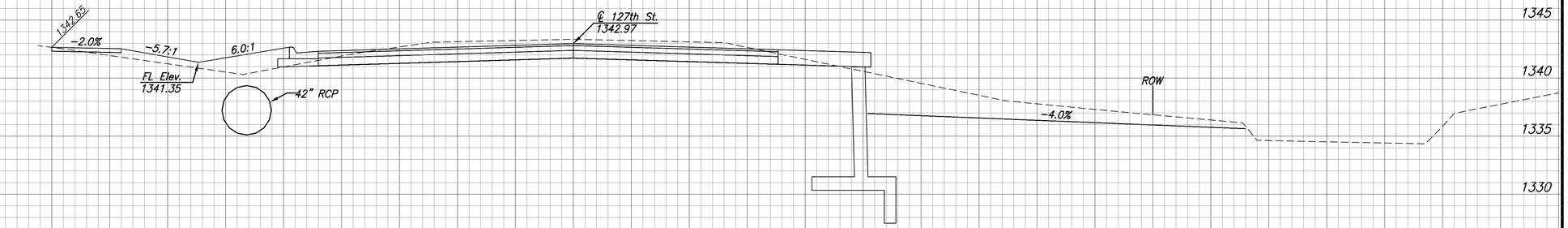

Sta. 19+50.00

C=137.32 SF

F=13.95 SF

Sta. 19+50.00

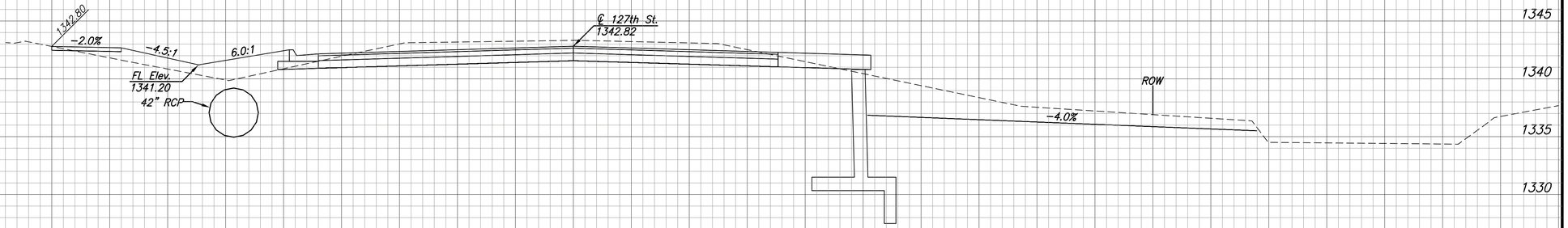

Sta. 19+00.00

C=146.63 SF

F=18.57 SF

Sta. 19+00.00

PLOTTED: Wednesday, November 29, 2017 @ 12:10PM
J:\PROJECTS\2014\1340\1340290 - CDW_127TH E 13TH TO 21ST\06-CIVIL\CAD\XSECT\1429DES.DWG

STATE	PROJECT NO.	YEAR	SHEET NO.	TOTAL SHEETS
KANSAS	87 N-0615-01	2017	160	183

PLOTTED: Wednesday, November 29, 2017 @ 02:10PM

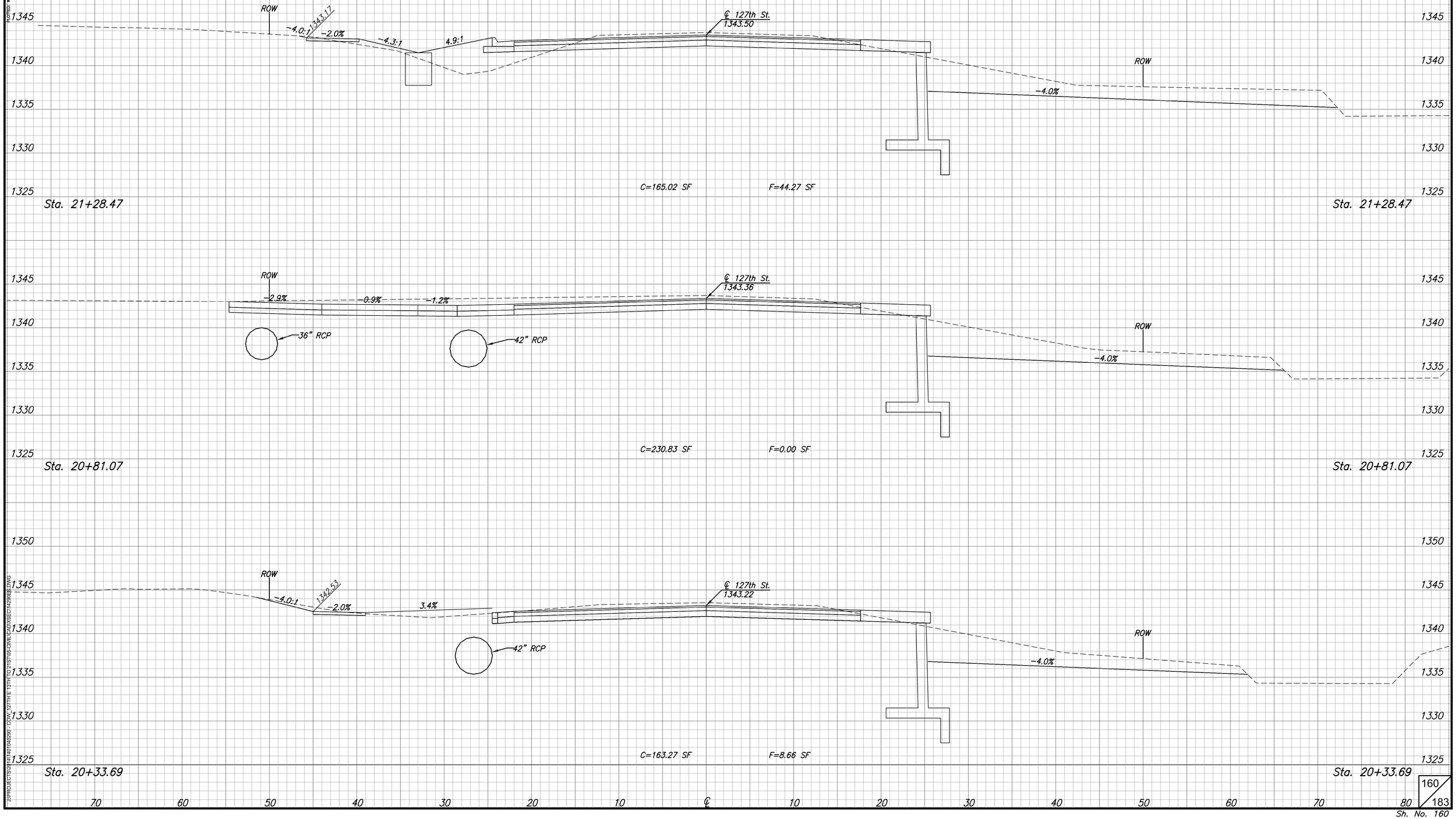

J:\PROJECTS\2014\4010\40260 - CDW_127TH E 191TH TO 215TH\05-CIVIL\CAD\XSEC\14296BLD.DWG

STATE	PROJECT NO.	YEAR	SHEET NO.	TOTAL SHEETS
KANSAS	87 N-0615-01	2017	161	183

PLOTTED: Wednesday, November 29, 2017 @ 12:10PM

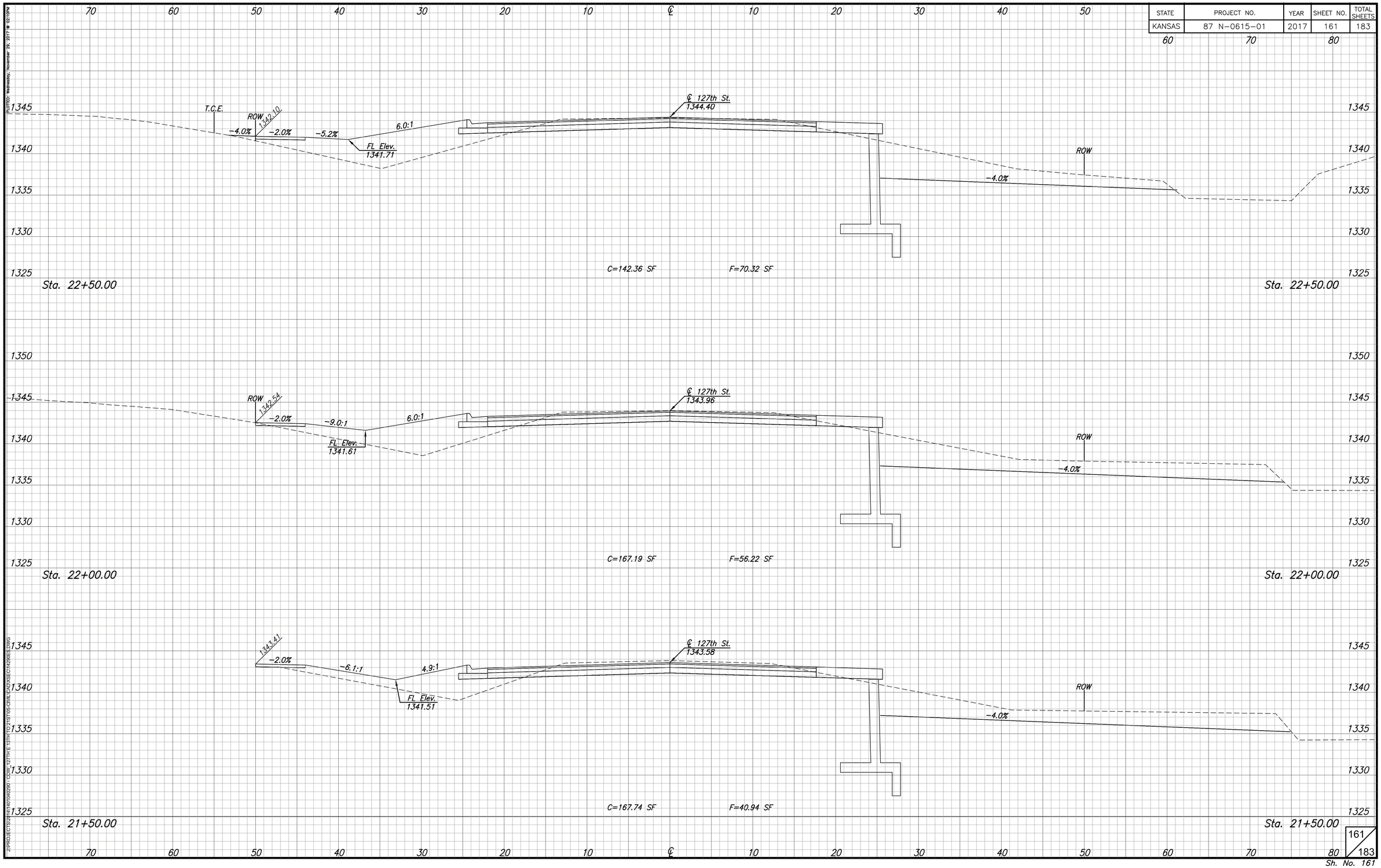

J:\PROJECTS\2014\7040260 - CCDW_127TH E 13TH TO 21ST\05-CIVIL\CADD\SECT1429RES.DWG

PLOTTED: Wednesday, November 29, 2017 @ 02:10PM

STATE	PROJECT NO.	YEAR	SHEET NO.	TOTAL SHEETS
KANSAS	87 N-0615-01	2017	162	183

70 60 50 40 30 20 10 ℄ 10 20 30 40 50 60 70 80

1350 1345 1340 1335 1330

℄ 127th St.
1345.09

-2.0%

ROW ROW ROW

C=0.00 SF F=3.55 SF

Sta. 23+27.09 Sta. 23+27.09

1345 1340 1335 1330 1325

℄ 127th St.
1344.85

4.0:1 ROW 2.0% 1343.17 -2.0% -4.9:1 5.0:1

FL Elev.
1342.11

-4.0% ROW

C=109.43 SF F=107.31 SF

Sta. 23+00.00 Sta. 23+00.00

1345 1340 1335 1330 1325

℄ 127th St.
1344.65

4.0:1 2.0% ROW 1342.37 -2.0% -6.4% 16.7%

FL Elev.
1341.93

-4.0% ROW

C=119.42 SF F=87.81 SF

Sta. 22+77.91 Sta. 22+77.91

70 60 50 40 30 20 10 ℄ 10 20 30 40 50 60 70 80

J:\PROJECTS\2014\4010\40260 - CDW_127TH E 131TH TO 21ST\06-CIVIL\CAD\XSECT\1426RES2.DWG

PLOTTED: Wednesday, November 29, 2017 @ 02:10PM

STATE	PROJECT NO.	YEAR	SHEET NO.	TOTAL SHEETS
KANSAS	87 N-0615-01	2017	163	183

70 60 50 40 30 20 10 ℄ 10 20 30 40 50 60 70 80

1355 1350 1345 1340 1335 1330

℄ 127th St.
1346.01

ROW

42" RCP

C=6.81 SF

F=10.24 SF

Sta. 24+30.03

Sta. 24+30.03

1350 1345 1340 1335 1330

℄ 127th St.
1345.75

ROW

42" RCP

C=6.64 SF

F=4.04 SF

Sta. 24+00.00

Sta. 24+00.00

1350 1345 1340 1335 1330

℄ 127th St.
1345.30

ROW

ROW

C=0.00 SF

F=13.63 SF

Sta. 23+50.00

Sta. 23+50.00

70 60 50 40 30 20 10 ℄ 10 20 30 40 50 60 70 80

J:\PROJECTS\2014\0104290 - CDOT_127TH E 131TH TO 21ST\09-CIVIL\CAD\XSECT\429ORES.DWG

STATE	PROJECT NO.	YEAR	SHEET NO.	TOTAL SHEETS
KANSAS	87 N-0615-01	2017	164	183

PLOTTED: Wednesday, November 29, 2017 @ 12:10PM

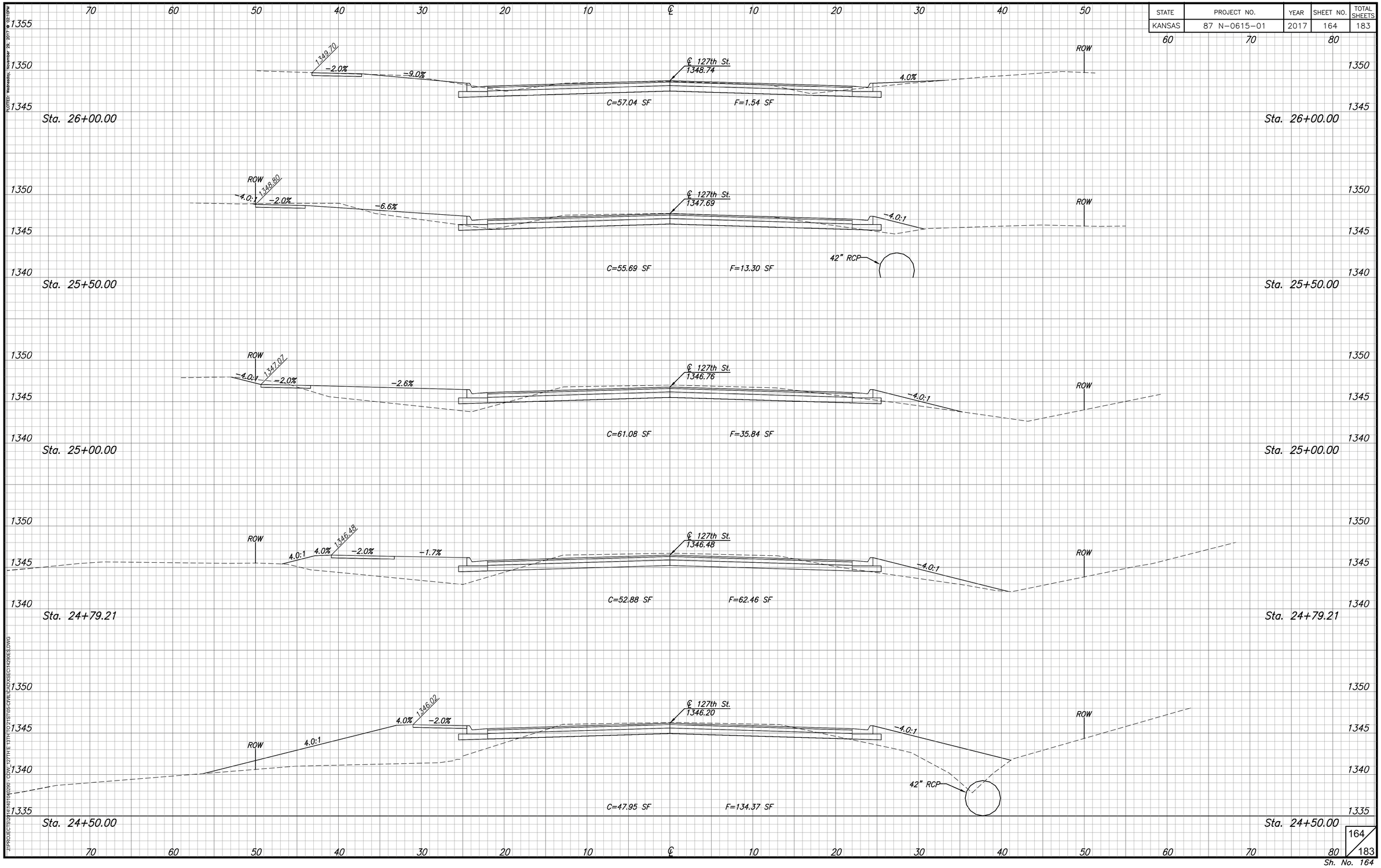

J:\PROJECTS\2014\014090 - CDW_127TH E 13TH TO 21ST\05-CIVIL\CAD\XSECT\1429RES.DWG

STATE	PROJECT NO.	YEAR	SHEET NO.	TOTAL SHEETS
KANSAS	87 N-0615-01	2017	165	183

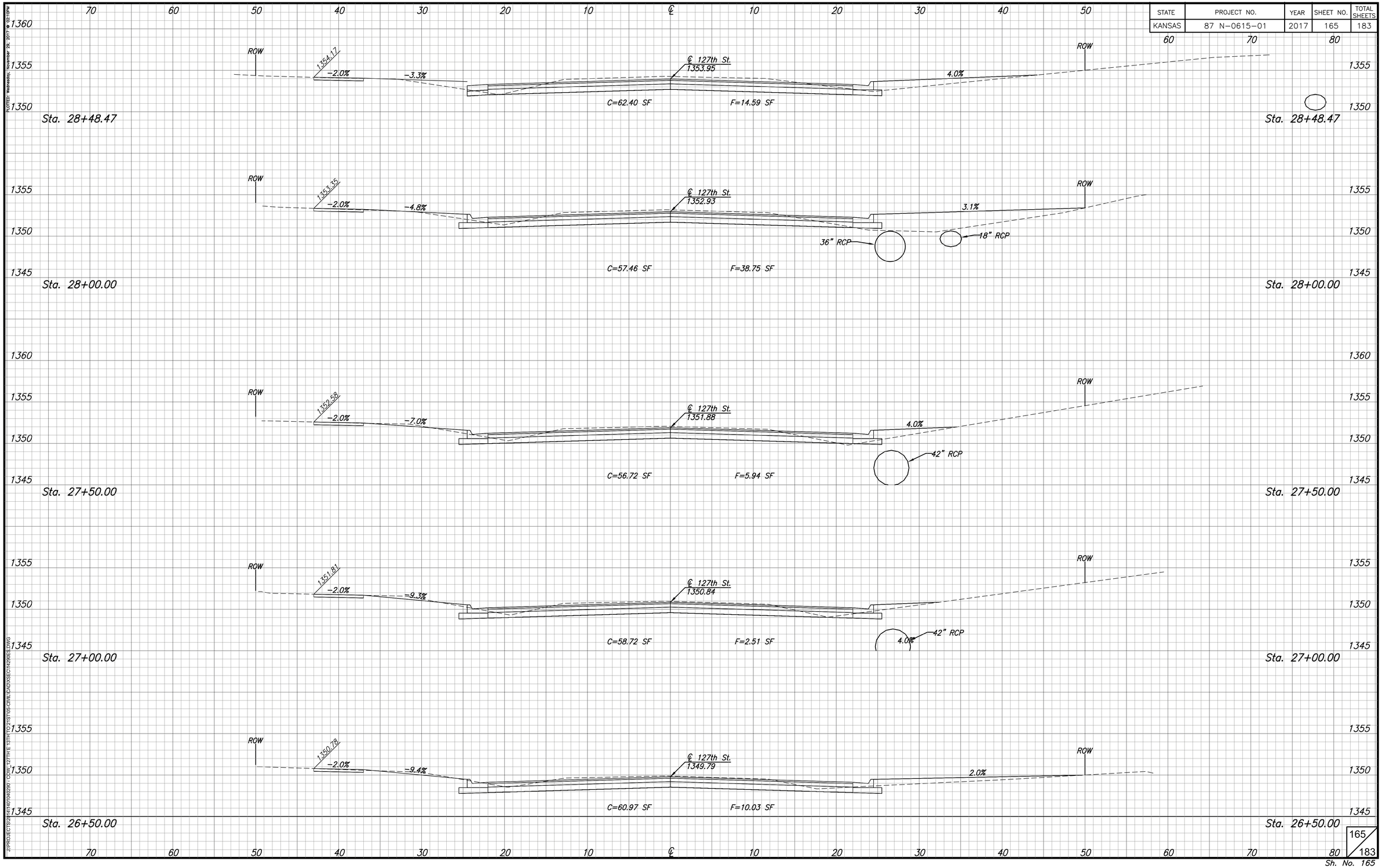

PLOTTED: Wednesday, November 29, 2017 @ 12:10PM
J:\PROJECTS\2014\1340\1340290 - CDW_127TH E 13TH TO 21ST\05-CIVIL\CAD\XSECT\1429RES.DWG

STATE	PROJECT NO.	YEAR	SHEET NO.	TOTAL SHEETS
KANSAS	87 N-0615-01	2017	166	183

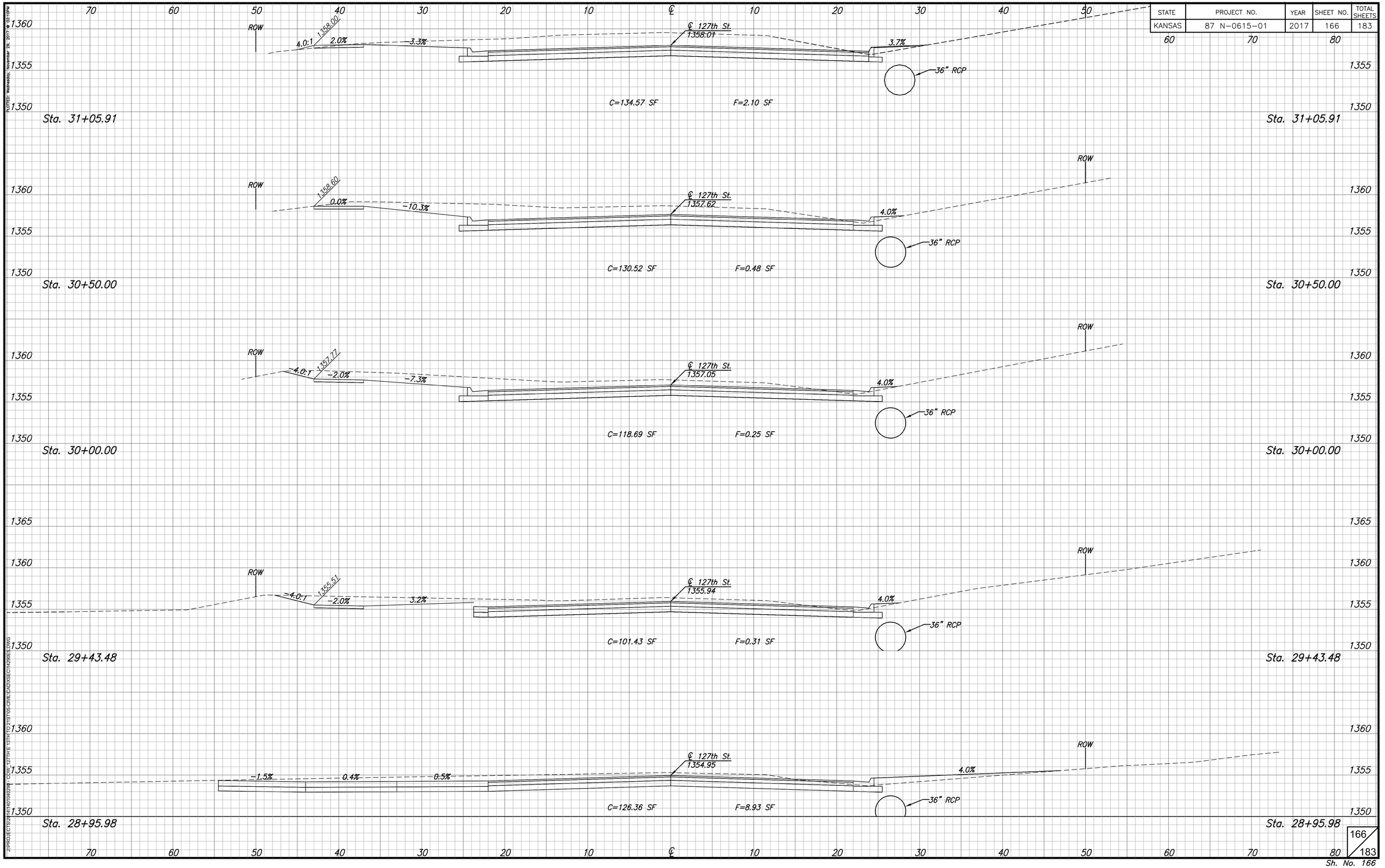

PLOTTED: Wednesday, November 29, 2017 @ 12:10PM
J:\PROJECTS\2014\0194\dgn\ - CDW_127TH E 13TH TO 21ST\05-CIVIL\CADD\XSECT\1429RES.DWG

PLOTTED: Wednesday, November 29, 2017 @ 02:10PM

STATE	PROJECT NO.	YEAR	SHEET NO.	TOTAL SHEETS
KANSAS	87 N-0615-01	2017	167	183

70 60 50 40 30 20 10 ℄ 10 20 30 40 50 60 70 80

1365 / 1360 / 1355

ROW

6.0:1 | 1358.86 | 2.0% | 0.6% | ℄ 127th St. 1359.37 | 4.0:1 | ROW | 36" RCP

C=207.06 SF F=0.13 SF

Sta. 33+00.00 Sta. 33+00.00

ROW

6.0:1 | 1358.75 | 2.0% | -1.3% | ℄ 127th St. 1359.02 | 4.0% | ROW | 36" RCP

C=172.72 SF F=8.17 SF

Sta. 32+50.00 Sta. 32+50.00

ROW

6.0:1 | 1358.70 | 2.0% | -3.5% | ℄ 127th St. 1358.78 | 4.0:1 | ROW

C=178.26 SF F=0.50 SF

Sta. 32+15.91 Sta. 32+15.91

ROW

6.0:1 | 1358.58 | 2.0% | -2.7% | ℄ 127th St. 1358.67 | 4.0:1 | ROW

C=171.00 SF F=0.79 SF

Sta. 32+00.00 Sta. 32+00.00

ROW

1357.89 | 2.0% | -0.1% | ℄ 127th St. 1358.32 | 4.0% | ROW

C=158.86 SF F=0.00 SF

Sta. 31+50.00 Sta. 31+50.00

J:\PROJECTS\2014\4015940290 - CDW_127TH E 131ST\TO 21ST\05-CIVIL\CAD\XSECT\1429RES.DWG

PLOTTED: Wednesday, November 29, 2017 @ 02:11PM
J:\PROJECTS\2014\4016\140290 - CDW_127TH E 131ST TO 215TH\5-CIVIL\CADD\XSECT\1429RES.DWG

STATE	PROJECT NO.	YEAR	SHEET NO.	TOTAL SHEETS
KANSAS	87 N-0615-01	2017	168	183

70 60 50 40 30 20 10 ℄ 10 20 30 40 50 60 70 80

1365 / 1360 / 1355

℄ 127th St.
1360.51

1.8% 3.5% 2.6% 2.0% 3.3%

36" RCP

C=365.76 SF F=0.00 SF

Sta. 34+00.69

Sta. 34+00.69

℄ 127th St.
1360.16

1.0% 4.0% 2.0%

36" RCP

C=432.63 SF F=0.00 SF

Sta. 33+79.93

Sta. 33+79.93

℄ 127th St.
1359.89

2.1% 2.8% 2.3% 2.0% 4.0%

36" RCP

C=419.37 SF F=0.00 SF

Sta. 33+60.51

Sta. 33+60.51

ROW

1358.85

-4.0% 2.0% 2.5%

℄ 127th St.
1359.60

ROW

36" RCP

C=238.55 SF F=0.00 SF

Sta. 33+32.38

Sta. 33+32.38

ROW

1358.86

-4.0% 2.0% 1.8%

℄ 127th St.
1359.51

ROW

36" RCP

C=227.31 SF F=0.00 SF

Sta. 33+21.11

Sta. 33+21.11

70 60 50 40 30 20 10 ℄ 10 20 30 40 50 60 70 80

PLOTTED: Wednesday, November 29, 2017 @ 12:11PM

STATE	PROJECT NO.	YEAR	SHEET NO.	TOTAL SHEETS
KANSAS	87 N-0615-01	2017	169	183

70 60 50 40 30 20 10 ℄ 10 20 30 40 50 60 70 80

1370 / 1365 / 1360 / 1355

Sta. 36+00.00

4.0:1 — 4.0% — 1364.01 — 2.0% — 4.4% — ℄ 127th St. 1364.86 — -4.0:1 — -17.8:1 — 6.0:1 — 2.0% — 1364.84 — -6.0:1

30" RCP

C=86.15 SF F=85.00 SF

Sta. 36+00.00

Sta. 35+50.00

ROW — 4.0:1 — 4.0% — 1362.02 — 2.0% — 5.4:1 — ℄ 127th St. 1364.21 — -4.0:1 — -16.4:1 — 6.0:1 — 2.0% — 1362.83 — ROW — -6.0:1

30" RCP

C=79.46 SF F=47.17 SF

Sta. 35+50.00

Sta. 35+00.00

ROW — 4.0:1 — 4.0% — 1360.95 — 2.0% — 5.7:1 — ℄ 127th St. 1363.06 — -4.0:1 — 6.0:1 — 2.0% — 1361.18 — ROW — 6.0:1

30" RCP

C=104.22 SF F=28.38 SF

Sta. 35+00.00

Sta. 34+42.13

ROW — 4.0:1 — 4.0% — 1361.01 — 2.0% — -0.2% — ℄ 127th St. 1361.41 — -4.0:1 — 6.0:1 — 2.0% — 1361.07 — ROW — 6.0:1

30" RCP

C=144.23 SF F=31.27 SF

Sta. 34+42.13

Sta. 34+27.48

ROW — 4.0:1 — 4.0% — 1360.42 — 2.0% — 3.5% — ℄ 127th St. 1361.06 — -6.3:1 — 6.2:1 — 2.0% — 1360.84 — ROW — 6.0:1

15" RCP

C=194.72 SF F=6.80 SF

36" RCP

Sta. 34+27.48

J:\PROJECTS\2014\1401940261 - CDW_127TH E 191TH TO 215TH\06-CIVIL\CAD\XSEC\1429RES2.DWG

STATE	PROJECT NO.	YEAR	SHEET NO.	TOTAL SHEETS
KANSAS	87 N-0615-01	2017	170	183

PLOTTED: Wednesday, November 29, 2017 @ 12:11PM

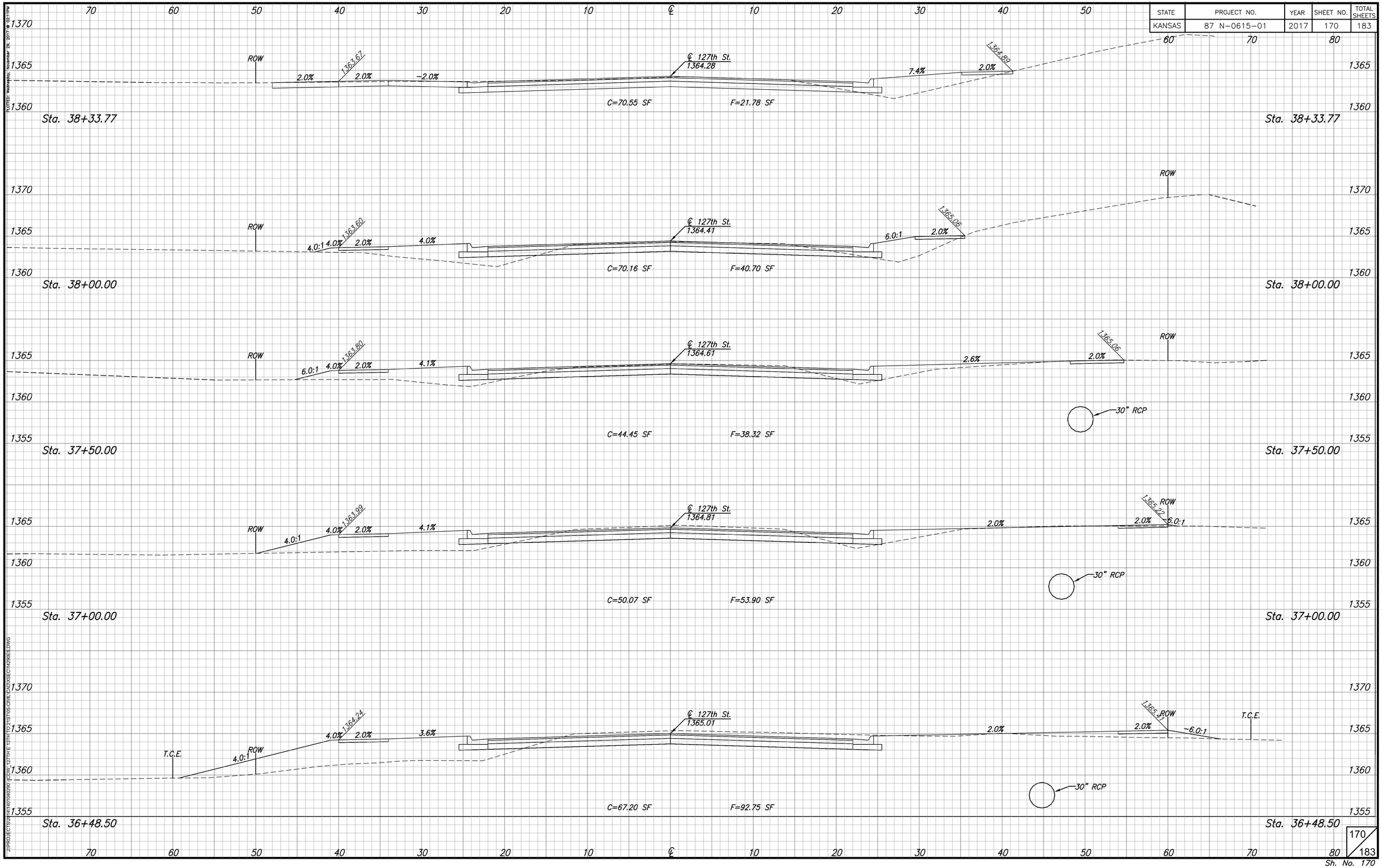

J:\PROJECTS\2014\0104290\CDW_127TH E 131TH TO 215TH\5-CIVIL\CADD\XSECT\1429RES.DWG

STATE	PROJECT NO.	YEAR	SHEET NO.	TOTAL SHEETS
KANSAS	87 N-0615-01	2017	171	183

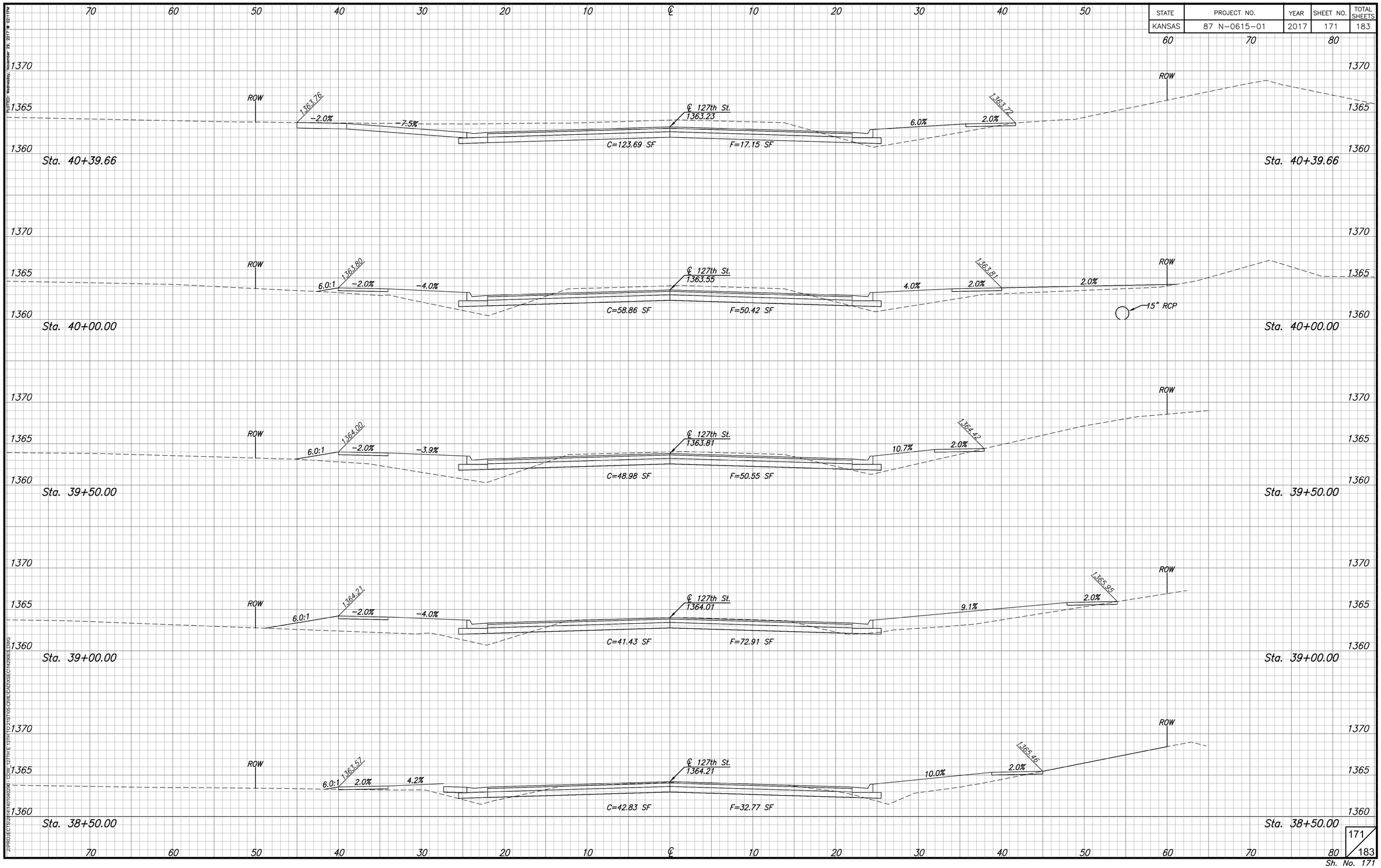

PLOTTED: Wednesday, November 29, 2017 @ 12:11PM
J:\PROJECTS\2014\0104208 - CDW_127TH E 13TH TO 21ST\05-CIVIL\CAD\XSECT\1429RES.DWG

STATE	PROJECT NO.	YEAR	SHEET NO.	TOTAL SHEETS
KANSAS	87 N-0615-01	2017	172	183

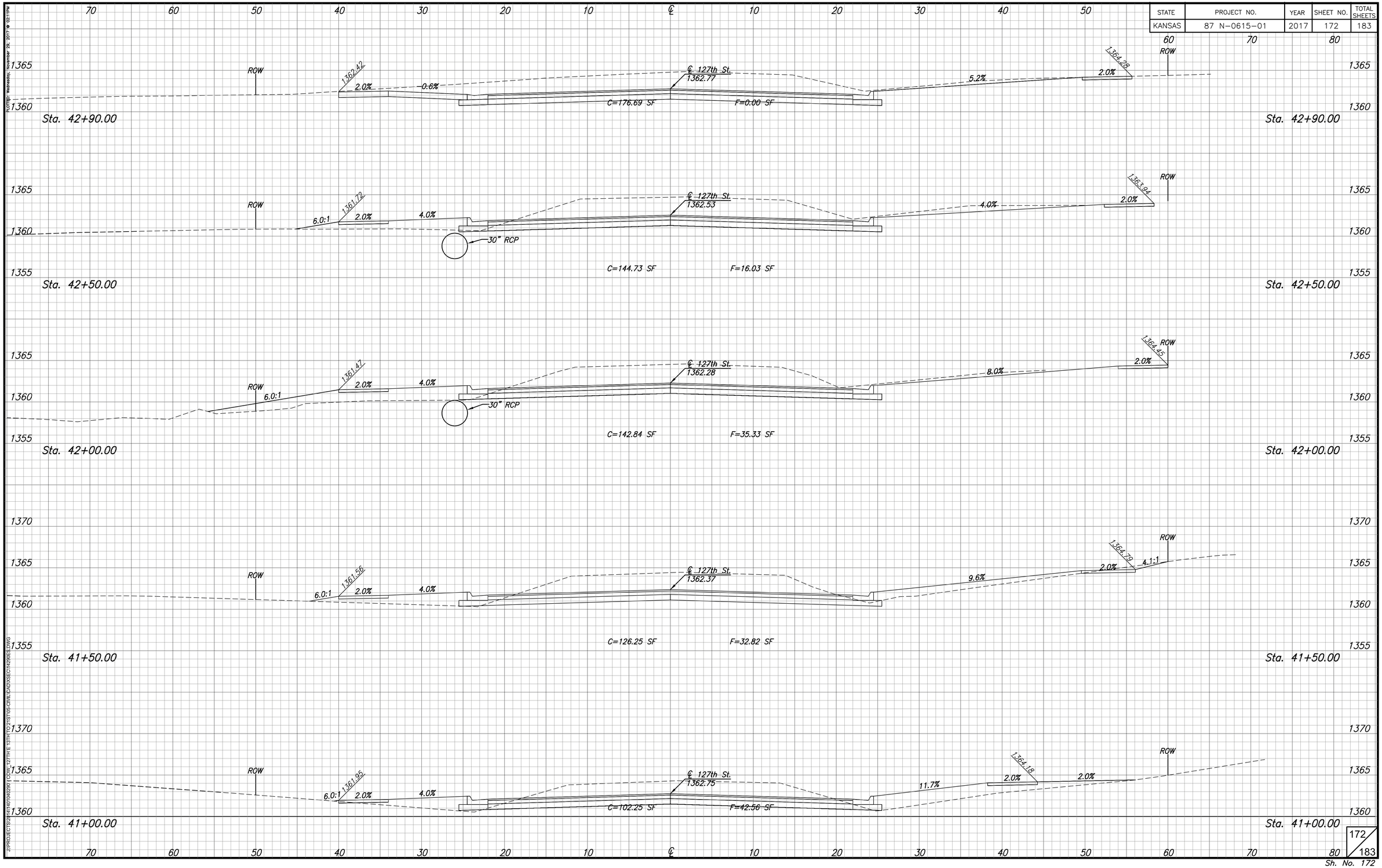

PLOTTED: Wednesday, November 29, 2017 @ 02:11PM
J:\PROJECTS\2014\0104\0901\CIVIL\127TH E 13TH TO 21ST\05-CIVIL\CAD\XSECTI429DES.DWG

STATE	PROJECT NO.	YEAR	SHEET NO.	TOTAL SHEETS
KANSAS	87 N-0615-01	2017	173	183

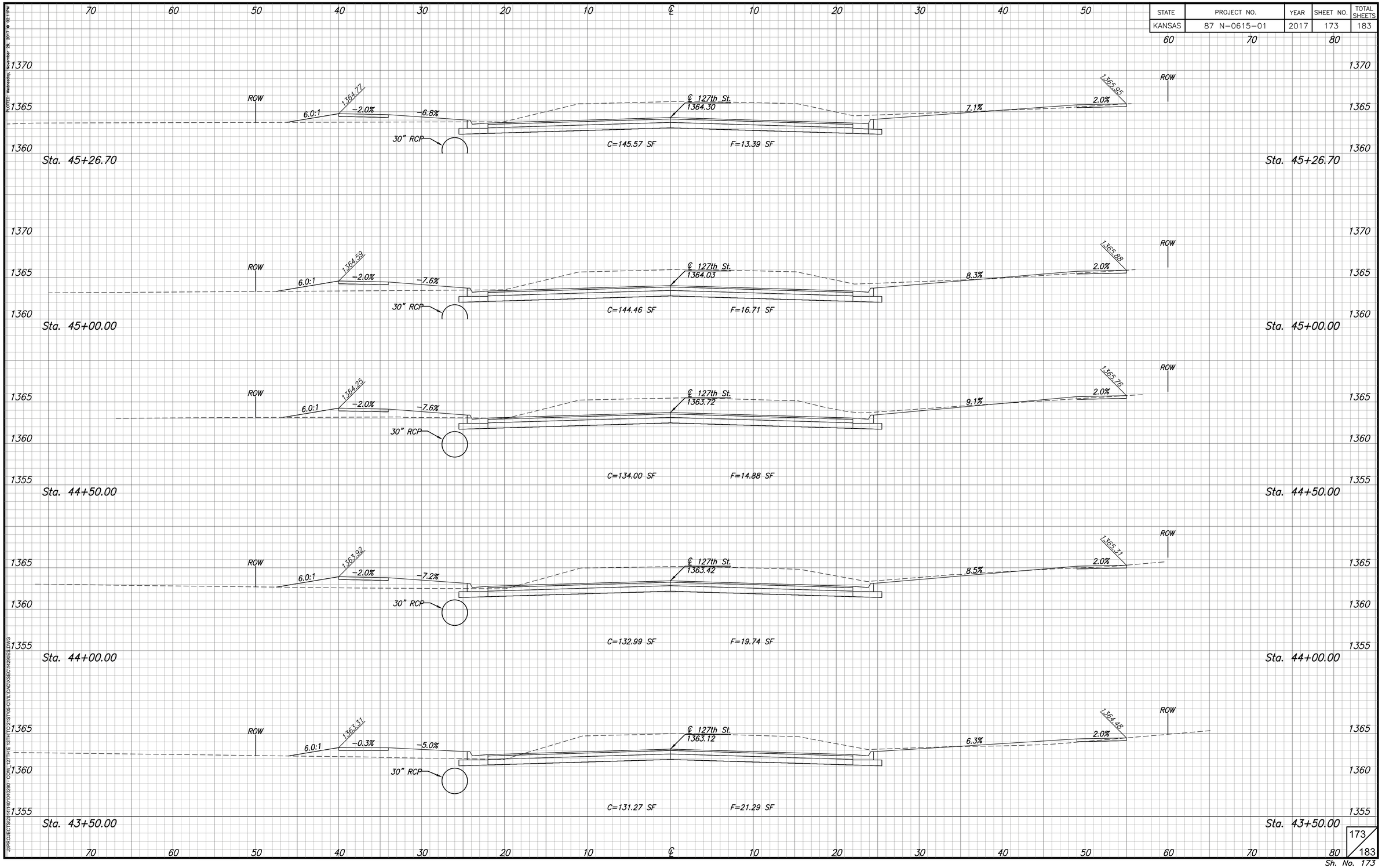

PLOTTED: Wednesday, November 29, 2017 @ 12:11PM
J:\PROJECTS\2014\1401340280 - CDW_127TH E 13TH TO 21ST\105-CIVIL\CAD\XSEC\1429RES2.DWG

STATE	PROJECT NO.	YEAR	SHEET NO.	TOTAL SHEETS
KANSAS	87 N-0615-01	2017	174	183

PLOTTED: Wednesday, November 29, 2017 @ 12:11PM

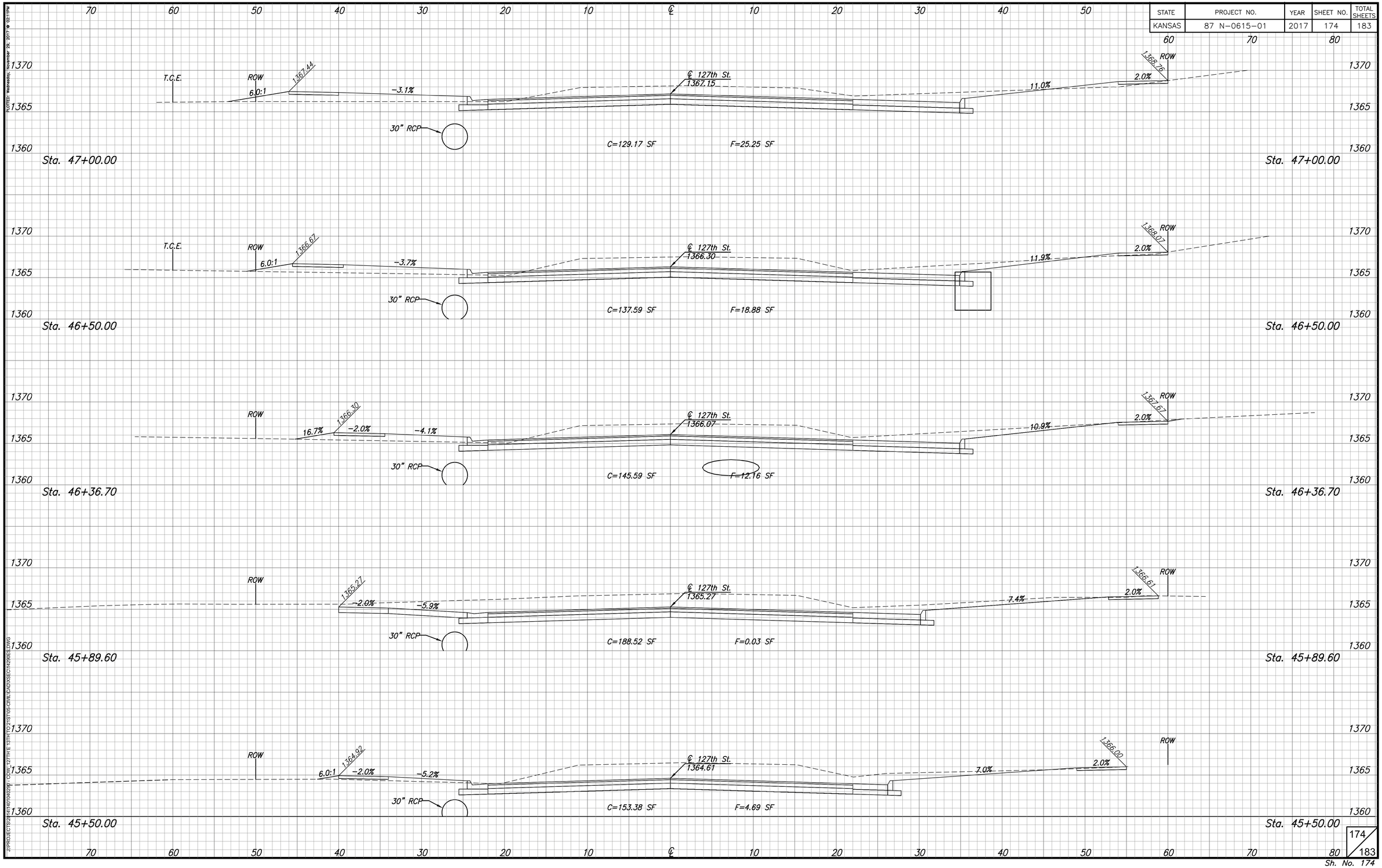

J:\PROJECTS\2014\1404029\7 - CIVIL_127TH E 13TH TO 21ST\105-CIVIL\CADD\SECT\1429DES.DWG

STATE	PROJECT NO.	YEAR	SHEET NO.	TOTAL SHEETS
KANSAS	87 N-0615-01	2017	175	183

PLOTTED: Wednesday, November 29, 2017 @ 12:11PM

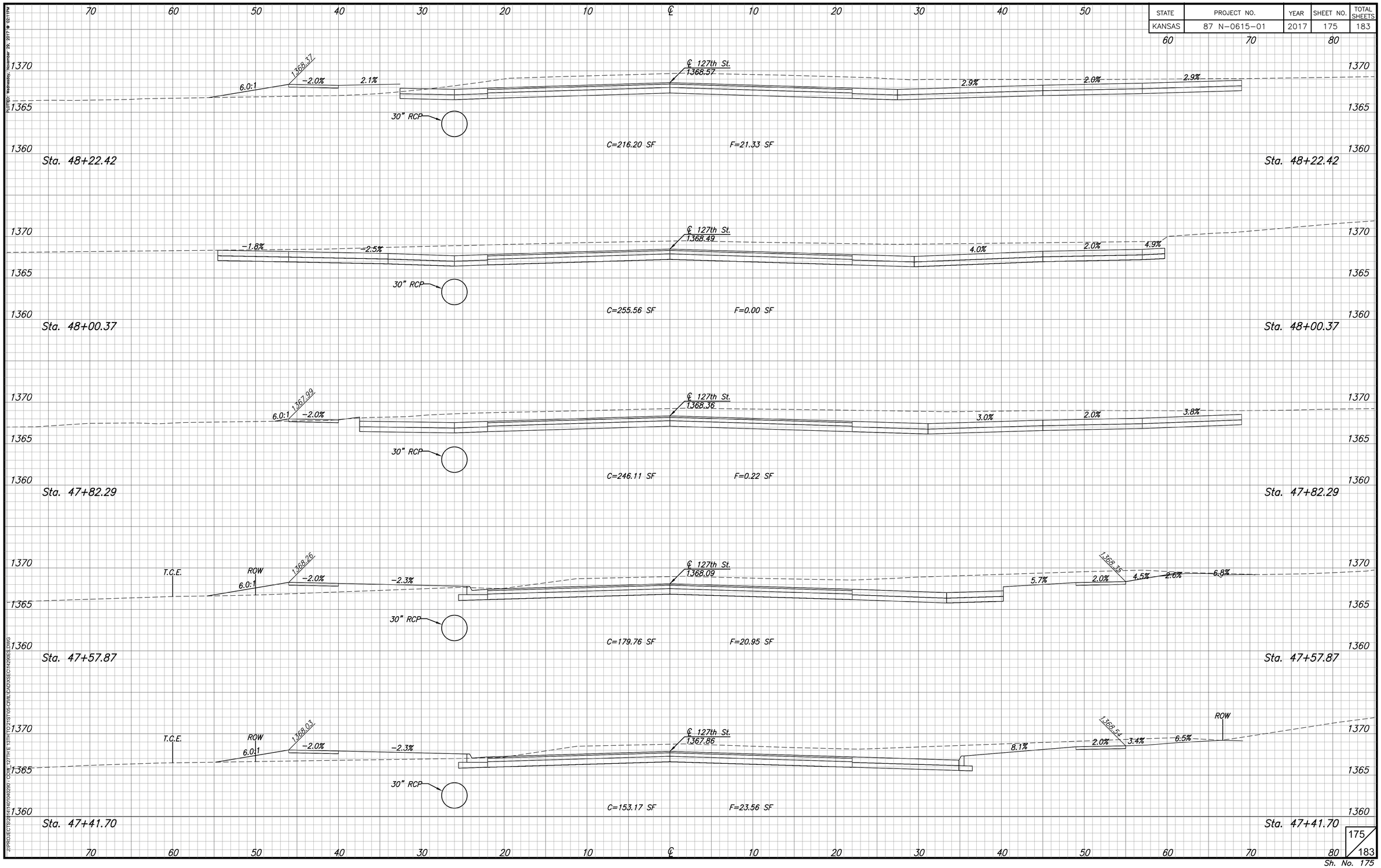

J:\PROJECTS\2014\01\040290 - CDM_127TH E 13TH TO 21ST\06-CIVIL\CAD\XSECT\429DES.DWG

STATE	PROJECT NO.	YEAR	SHEET NO.	TOTAL SHEETS
KANSAS	87 N-0615-01	2017	176	183

PLOTTED: Wednesday, November 29, 2017 @ 12:11PM

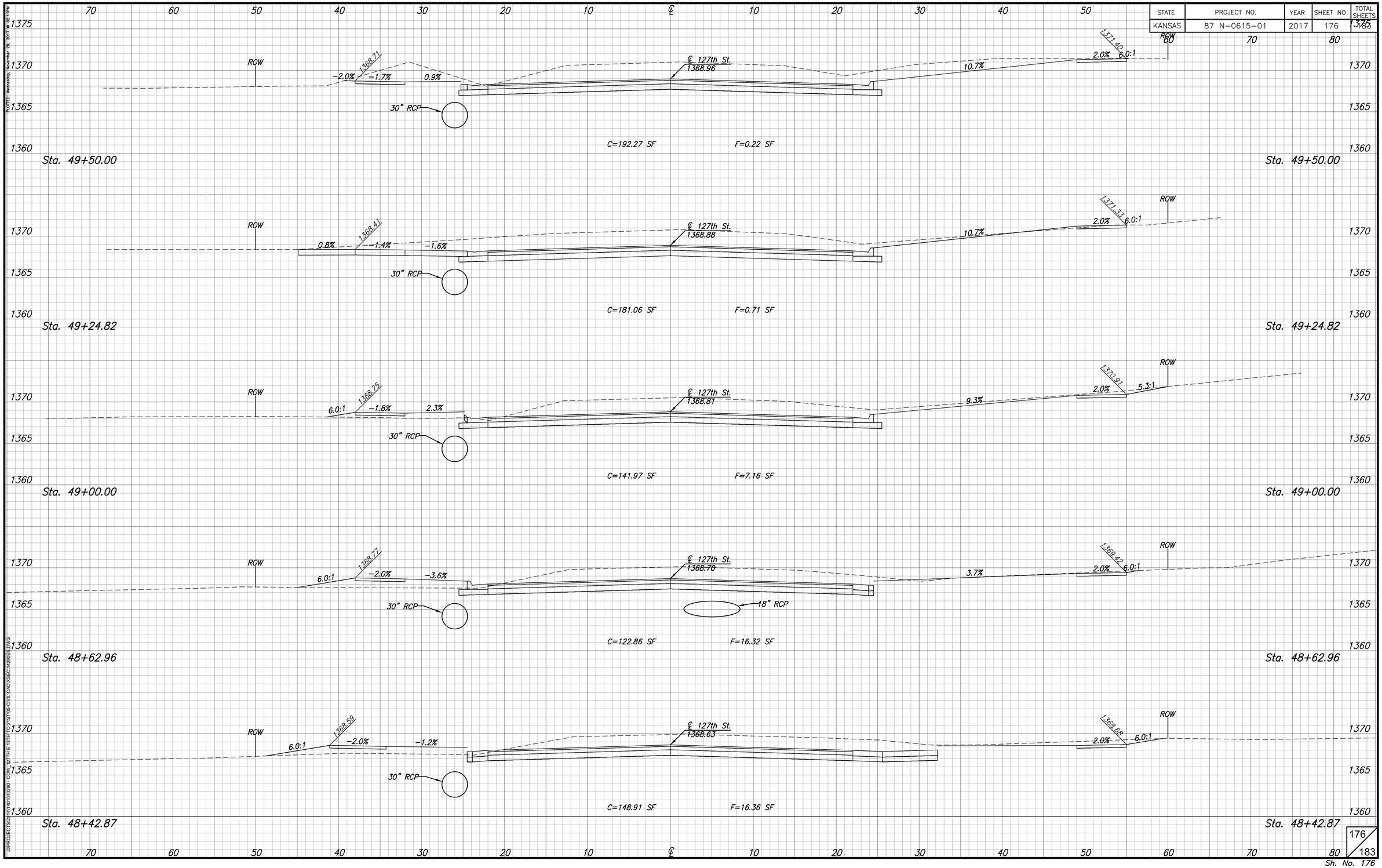

J:\PROJECTS\2014\4010\40260 - CDW - 127TH E 13TH TO 21ST\06-CIVIL\CAD\XSEC\1429RES2.DWG

STATE	PROJECT NO.	YEAR	SHEET NO.	TOTAL SHEETS
KANSAS	87 N-0615-01	2017	177	183

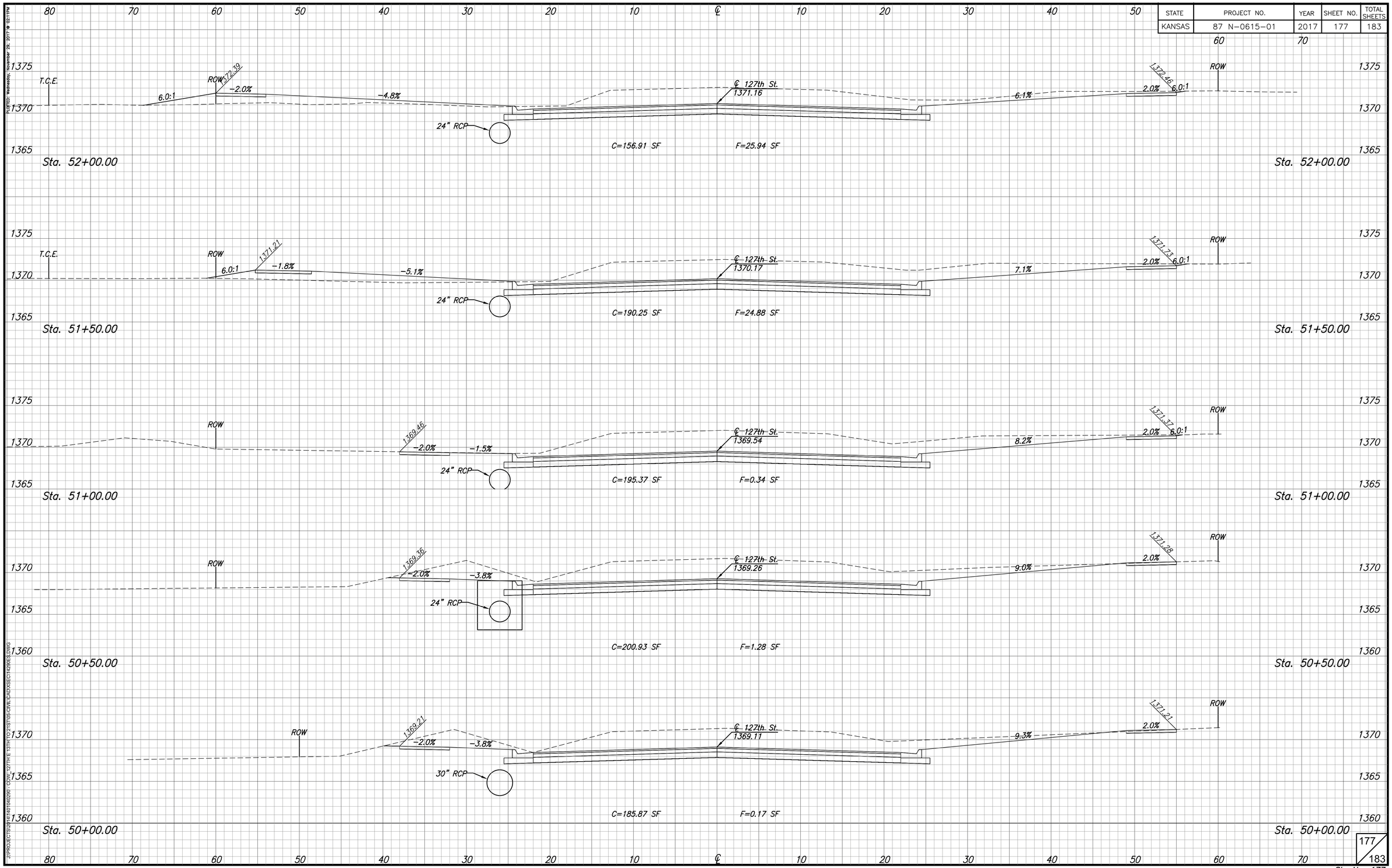

PLOTTED: Wednesday, November 29, 2017 @ 12:11PM
J:\PROJECTS\2014\4010\4029\0 - CDOT_127TH E 13TH TO 21ST\105-CIVIL\CADD\SEC\142905ES.DWG

177/183

Sh. No. 177

STATE	PROJECT NO.	YEAR	SHEET NO.	TOTAL SHEETS
KANSAS	87 N-0615-01	2017	178	183

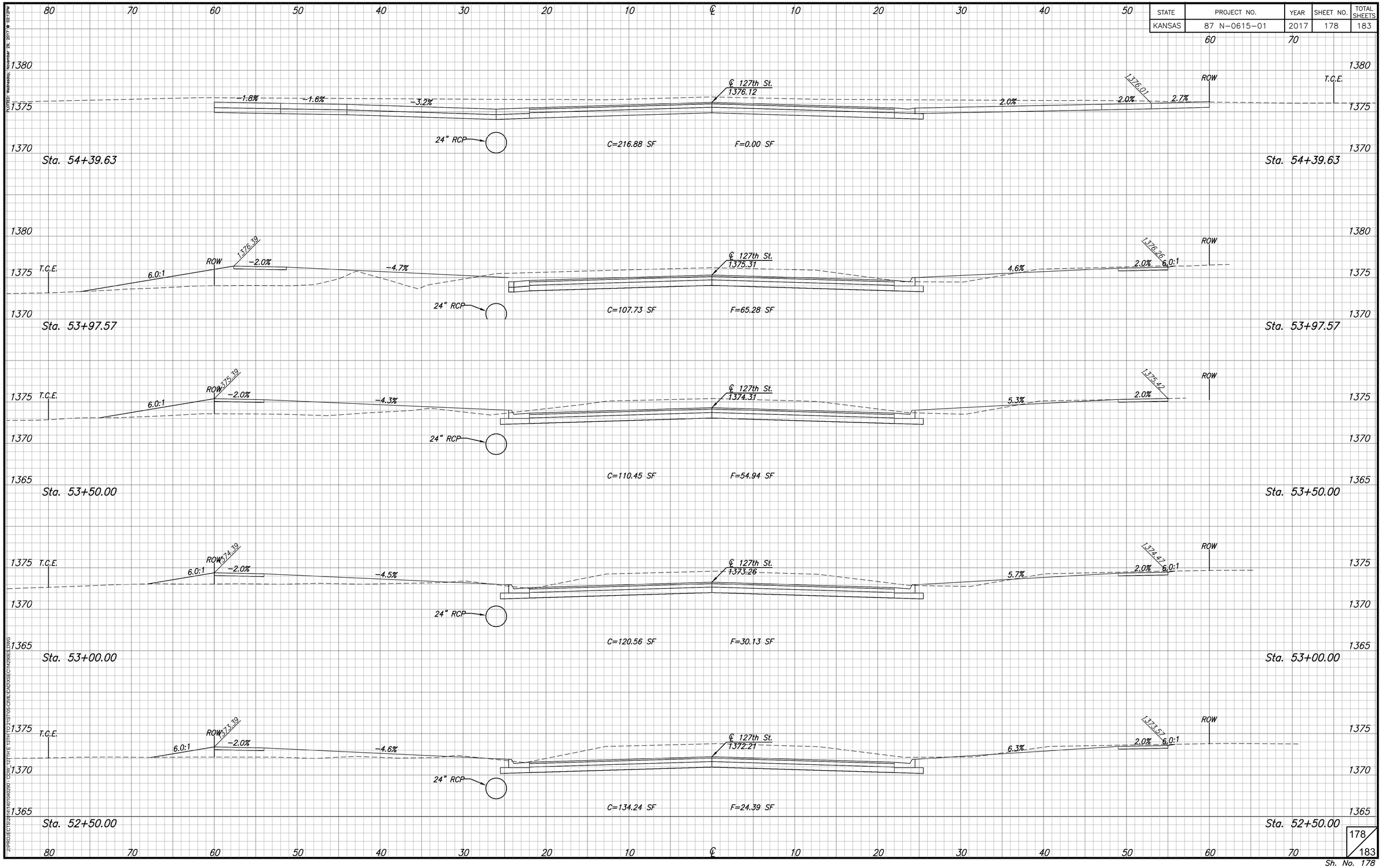

PLOTTED: Wednesday, November 29, 2017 @ 12:12PM
J:\PROJECTS\2014\2014010\4290 - CIDW_127TH E 13TH TO 21ST\05-CIVIL\CAD\XSECT\4290ES2.DWG

STATE	PROJECT NO.	YEAR	SHEET NO.	TOTAL SHEETS
KANSAS	87 N-0615-01	2017	179	183

PLOTTED: Wednesday, November 29, 2017 @ 02:12PM

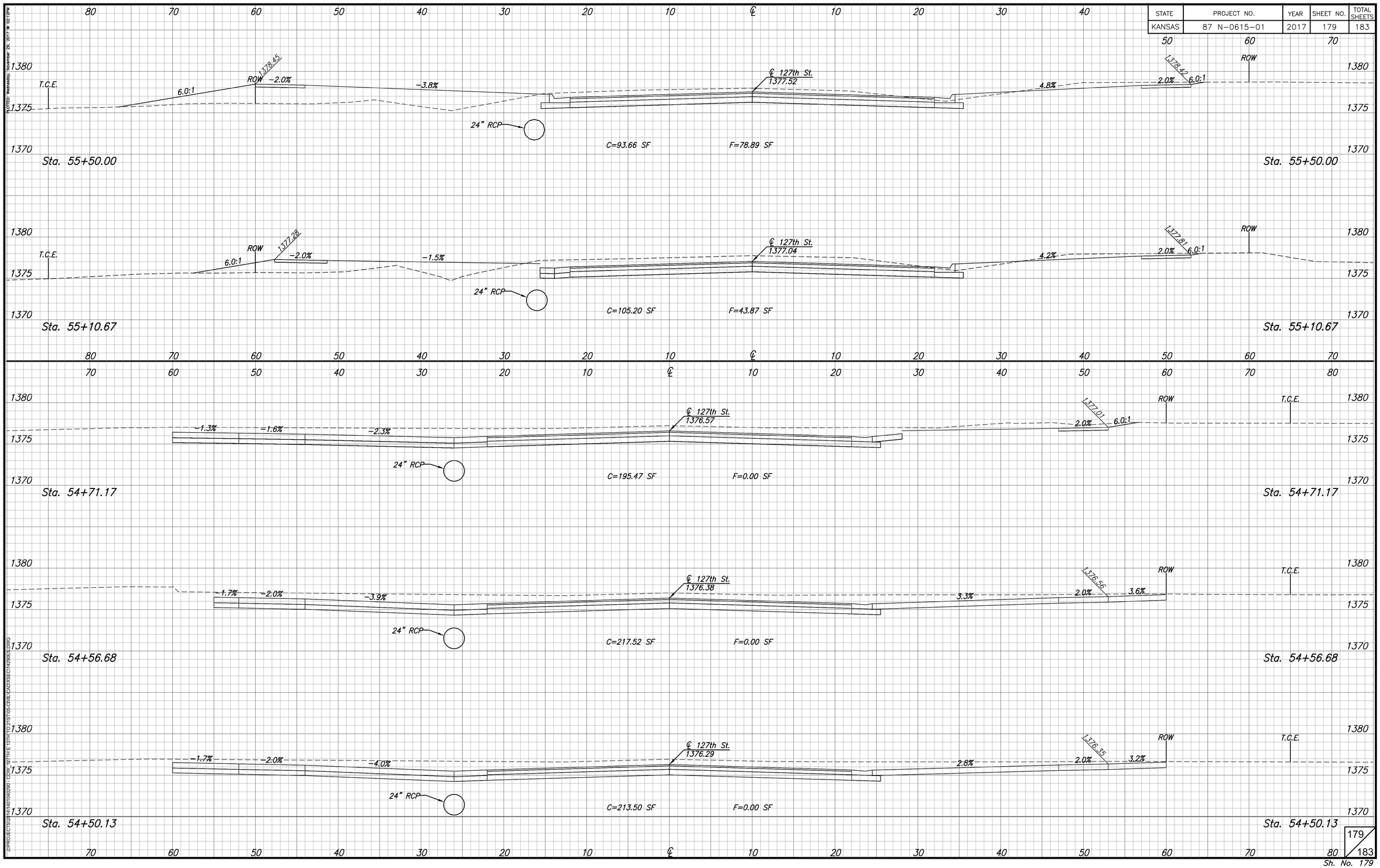

J:\PROJECTS\2014\1401340280 - CDW_187TH E 191TH TO 215TH\06-CIVIL\CAD\XSEC\1429RES.DWG

STATE	PROJECT NO.	YEAR	SHEET NO.	TOTAL SHEETS
KANSAS	87 N-0615-01	2017	180	183

80 70 60 50 40 30 20 10 ℄ 10 20 30 40 50 60 70

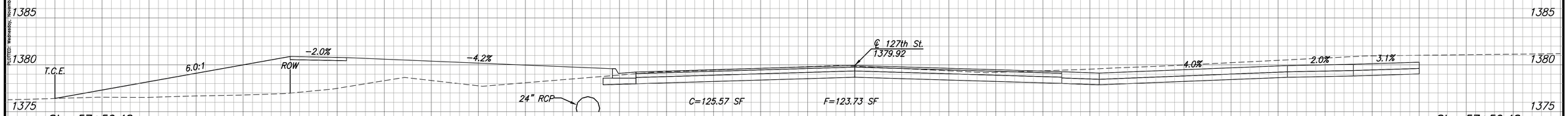

Sta. 57+50.48 C=125.57 SF F=123.73 SF Sta. 57+50.48

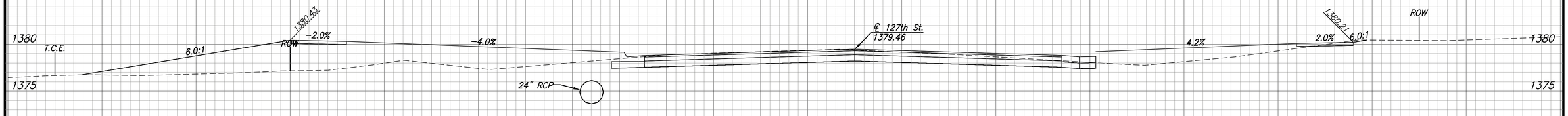

Sta. 57+12.33 C=56.87 SF F=135.87 SF Sta. 57+12.33

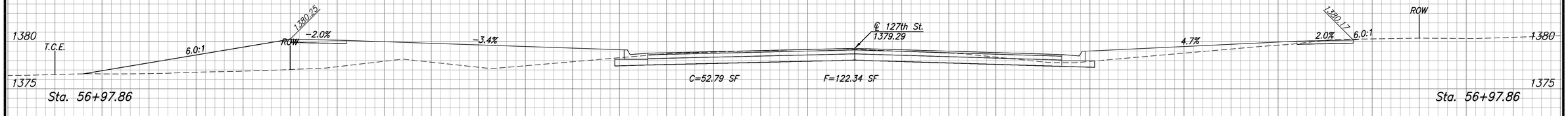

Sta. 56+97.86 C=52.79 SF F=122.34 SF Sta. 56+97.86

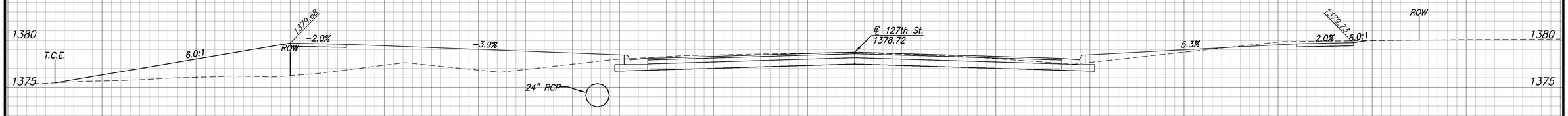

Sta. 56+50.00 C=65.25 SF F=115.05 SF Sta. 56+50.00

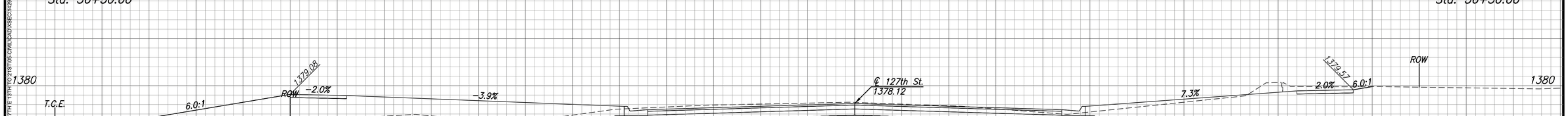

Sta. 56+00.00 C=75.47 SF F=96.54 SF Sta. 56+00.00

80 70 60 50 40 30 20 10 ℄ 10 20 30 40 50 60 70

180/183

Sh. No. 180

PLOTTED: Wednesday, November 29, 2017 @ 12:12PM
J:\PROJECTS\2014\0194290 - CDW_127TH E 13TH TO 21ST\05-CIVIL\CAD\XSECT\1429RES2.DWG

STATE	PROJECT NO.	YEAR	SHEET NO.	TOTAL SHEETS
KANSAS	87 N-0615-01	2017	181	183

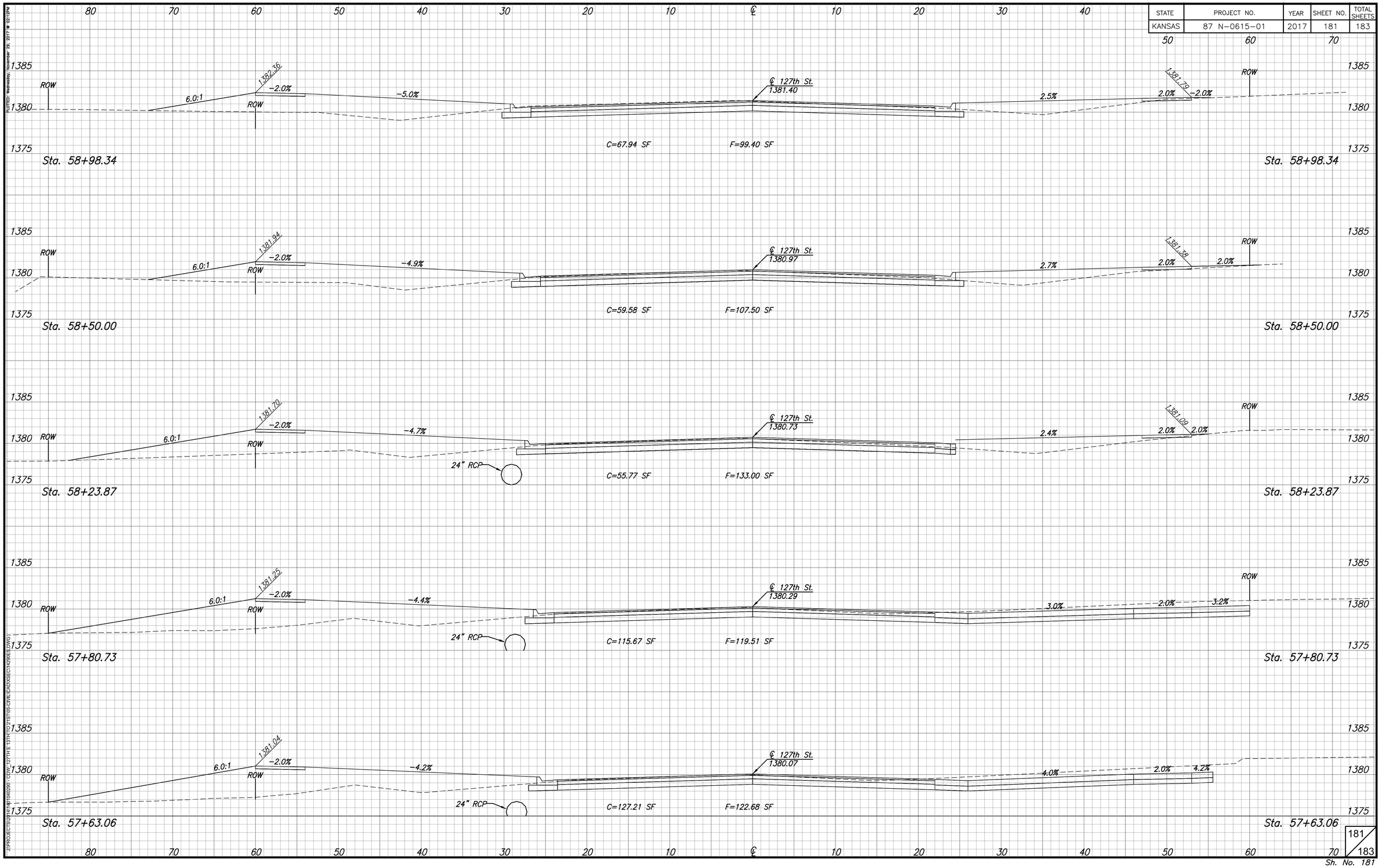

PLOTTED: Wednesday, November 29, 2017 @ 12:12PM
J:\PROJECTS\2014\4010492\90 - CDW_127TH\E 131ST\TO 21ST\105-CIVIL\CADD\SEC\142905E3.DWG

STATE	PROJECT NO.	YEAR	SHEET NO.	TOTAL SHEETS
KANSAS	87 N-0615-01	2017	182	183

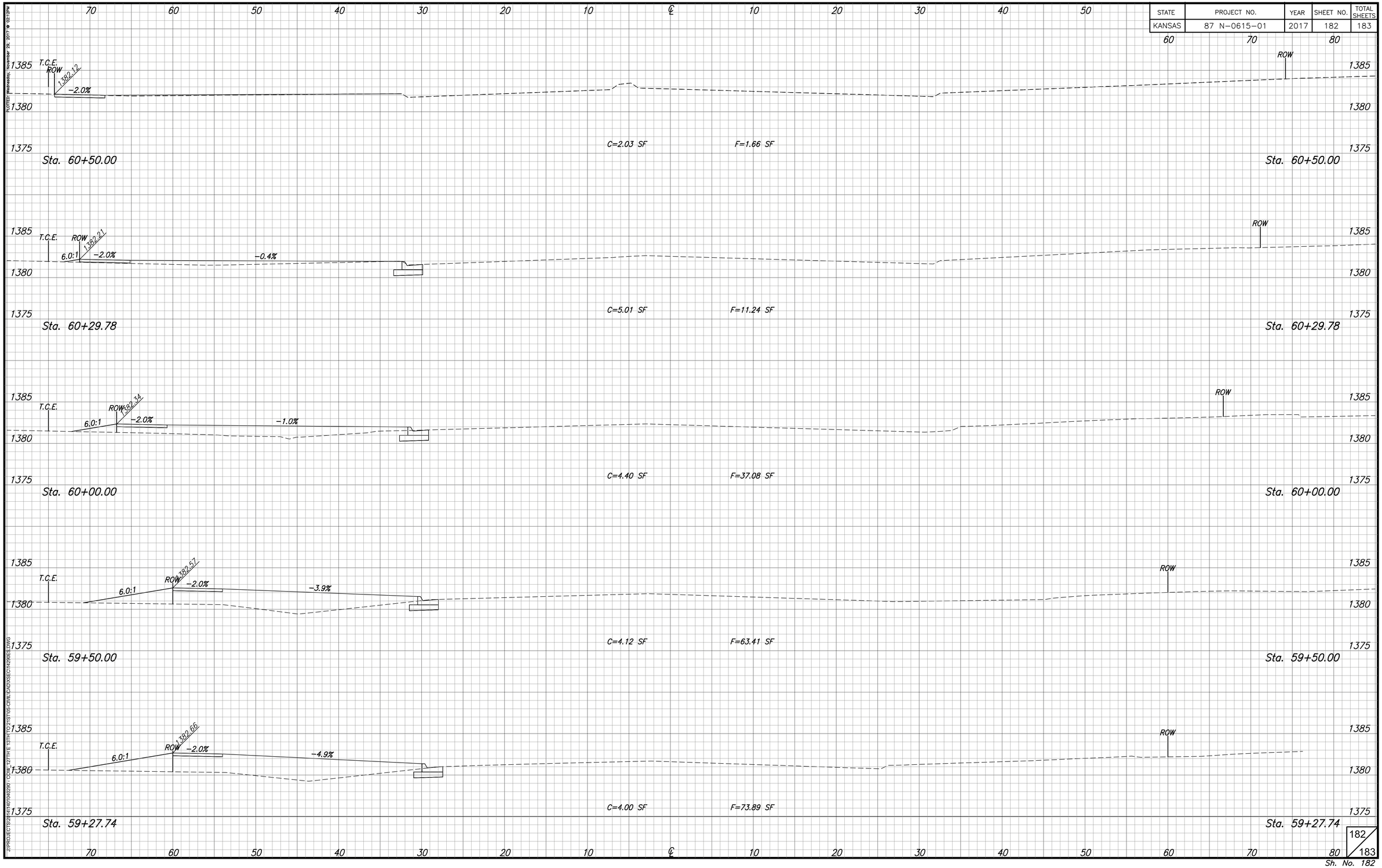

PLOTTED: Wednesday, November 29, 2017 @ 02:12PM
J:\PROJECTS\2014\0140260 - CDW_127TH E 191TH TO 215TH\05-CIVIL\CAD\XSEC\1429RES2.DWG

PLOTTED: Wednesday, November 29, 2017 @ 02:12PM
J:\PROJECTS\2014\4016140290 - CDW_127TH E 13TH TO 21ST\05-CIVIL\CADD\XSECT\1429RES.DWG

STATE	PROJECT NO.	YEAR	SHEET NO.	TOTAL SHEETS
KANSAS	87 N-0615-01	2017	183	183

70 60 50 40 30 20 10 ℄ 10 20 30 40 50 60 70 80

1390
1385
1380

Sta. 62+51.82

C=0.00 SF F=0.00 SF

Sta. 62+51.82

1390
1385
1380

1383.72
0.1%

Sta. 62+25.00

C=2.53 SF F=0.00 SF

Sta. 62+25.00

1390
1385
1380

ROW
1383.41
0.7%

Sta. 62+00.00

C=2.01 SF F=0.00 SF

Sta. 62+00.00

1385
1380
1375

ROW
1382.91
0.9%

Sta. 61+50.00

C=2.00 SF F=0.00 SF

Sta. 61+50.00

1385
1380
1375

ROW
1382.45
-0.7%

Sta. 61+00.00

C=2.00 SF F=0.00 SF

Sta. 61+00.00

70 60 50 40 30 20 10 ℄ 10 20 30 40 50 60 70 80

183/183

Sh. No. 183