FHWA REG NO.	STATE	PROJECT NO.	YEAR	SHEET NO.	TOTAL SHEETS
7	KANSAS	87 N-0199-01	2002	107	158

FED. AID NO. CMQ-N019(901)

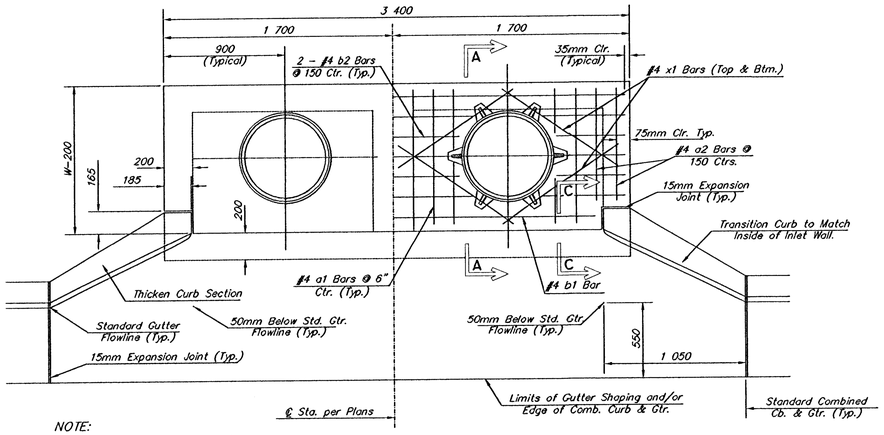

NOTE:
Expansion Joint Only in Curb Area with Concrete Pavement.

PLAN

*Left Side Shown Without Slab Reinforcing, Right Side Shown With Slab Reinforcing

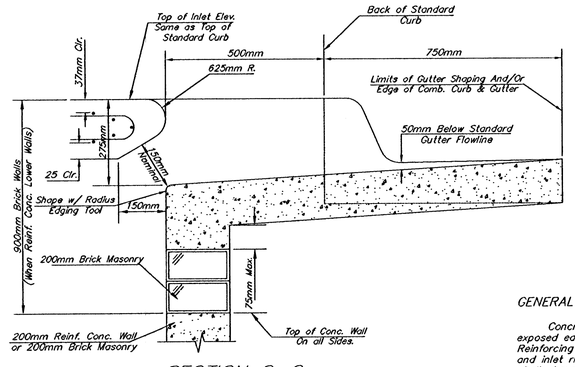

SECTION C-C

PRECAST SLAB AND FLOOR REINFORCING											
		W = 1 300		W = 1 600		W = 1 900		W = 2 200		W = 2 500	
MARK	SIZE	NO.	LENGTH	NO.	LENGTH	NO.	LENGTH	NO.	LENGTH	NO.	LENGTH
a1	#4	13	1 975	13	2 575	13	3 175	13	3 775	13	4 375
* a2	#4	4	1 800	4	2 400	4	3 000	4	3 600	4	4 200
a3	#4	23	1 225	23	1 525	23	1 825	23	2 125	23	2 425
b1	#4	1	2 925	1	2 925	1	2 925	1	2 925	1	2 925
* b2	#4	23	3 325	29	3 325	35	3 325	41	3 325	47	3 325
x1	#4	16	1 150	16	1 250	16	1 350	16	1 450	16	1 550
WALL REINFORCING											
		W = 1 300		W = 1 600		W = 1 900		W = 2 200		W = 2 500	
MARK	SIZE	NO.	LENGTH	NO.	LENGTH	NO.	LENGTH	NO.	LENGTH	NO.	LENGTH
w1	#4	①	3 325	①	3 325	①	3 325	①	3 325	①	3 325
w2	#4	①	1 225	①	1 525	①	1 825	①	2 125	①	2 425
w3	#4	52	②	56	②	60	②	64	②	68	②

* Field Bend or Cut Reinforcing as Required for Clearance.

① 4 (H1 - 300) (H1 - 525) Rounded down to nearest 150mm

② H1 - 75

GENERAL NOTES:

Concrete shall be C.O.W. standard paving mix. All exposed edges shall be finished with an edging tool. Reinforcing bars shall be field bent or cut to clear pipes and inlet rings. All bars are #4 bars @ 150mm spacing and shall have a minimum clearance of 40mm unless otherwise noted. Floors of inlet shall be shaped with 8 sack sand mix concrete to increase hydraulic efficiency such that the inlet will be self cleaning between all inlet and/or outlet pipe(s). The contractor will be required to to construct 200mm brick masonry walls between the inlet base and top on this inlet when H=2.1m or less and W=1.9m or less. When W is greater than 1.9m and H is less than 2.1m, the outside inlet walls below the brick stack shall be reinforced concrete construction.

Concrete tops to be installed on thin mortar cushion to insure full support along brick walls. Concrete tops may be cast in place or precast.

The ends of all pipes installed in inlets shall be cut off flush with the inside face of the inlet wall.

This detail is identical to the standard detail drawing except that the gutter transition length is increased from 600mm to 1050mm.

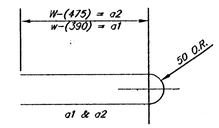

BENDING DIAGRAM

STANDARD CURB INLET PRECAST TOPS			
W	PRE-CAST TOP SIZE	PIPE SIZE	CU. YD. CONC.
1 300	1 100 x 3 400 x 190	525mm & SMALLER	0.83±
1 600	1 400 x 3 400 x 190	600mm & 750mm	0.83±
1 900	1 700 x 3 400 x 190	900mm & 1050mm	1.03±
2 200	2 000 x 3 400 x 190	1200mm & 1350mm	1.23±
2 500	2 300 x 3 400 x 190	1500mm & 1650mm	1.42±

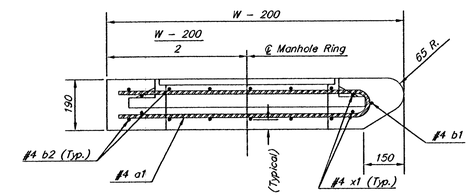

SECTION A-A

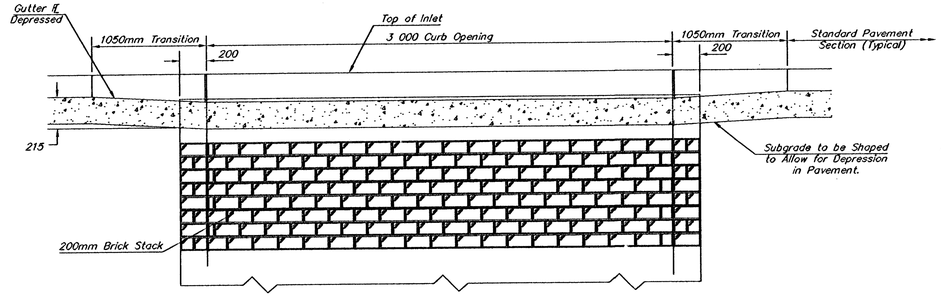

ELEVATION

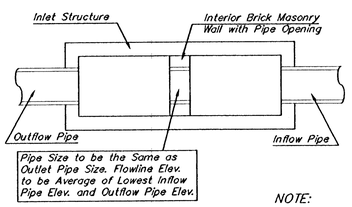

CASE I

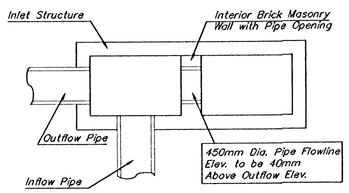

CASE II

NOTE:
Center Wall Pipe Size shall be as Specified in Inlet Construction Notes on the Plan/Profile Sheets for those Cases not Shown Here.

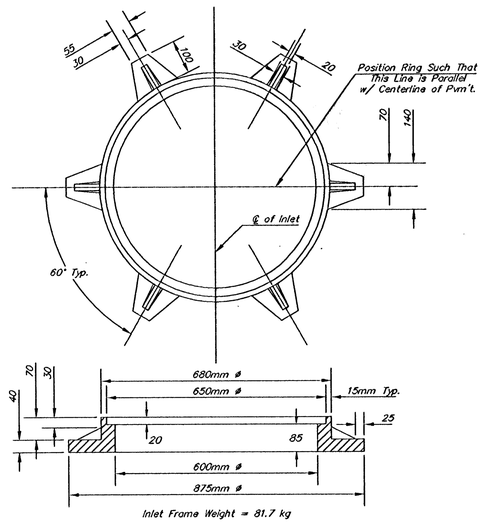

MANHOLE RING AND COVER

*See City of Wichita Standard Manhole Ring and Cover Detail Sheet for Cover Details to Be Used With Inlet Frame.

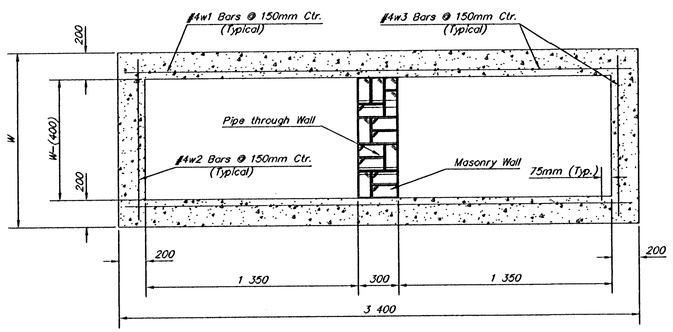

SECTION B-B

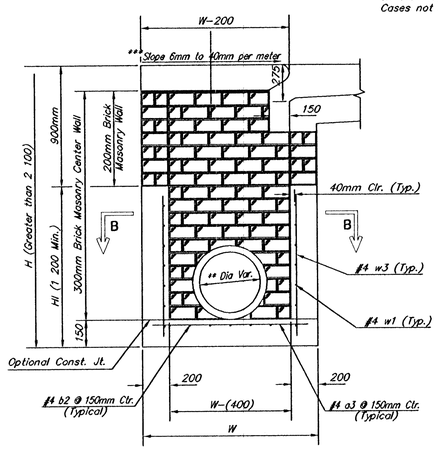

TYPICAL INLET SECTION AT CENTER WALL

(Reinforced Concrete Walls)

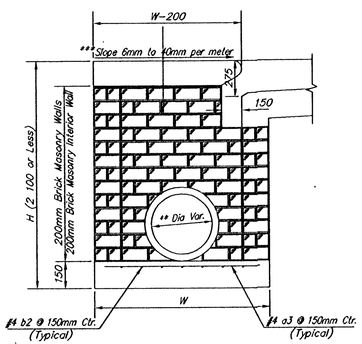

TYPICAL INLET SECTION AT CENTER WALL

(Masonry Walls)

NOTES:

** A center wall opening shall be provided by means of a section of reinforced concrete pipe. See Case I and Case II above.

*** Slope of inlet tops to match sidewalk of parking slopes within limits indicated.

STANDARD TYPE 1-A CURB INLET OPENING = 150mm x 3 000mm

HWS Consulting Group Inc
Omaha Office
10844 Old Mill Rd., Ste 1
Omaha, NE 68154
Phone: (402) 333-5792
Fax: (402) 333-2248

Designed By:	BWE	Checked By:	RJK
Drawn By:	HS , TS	Date: 3-25-2002	Job No. 55-70-2003