STATE	PROJECT NO.	YEAR	SHEET NO	TOTAL SHEETS
KANSAS	472-83519-PHASE II	2003	7	9

DATE	BY	
		REFERENCES NOTED
		REFERENCES CHECKED

SERVICE BOX CONSTRUCTION/INSTALLATION DETAILS

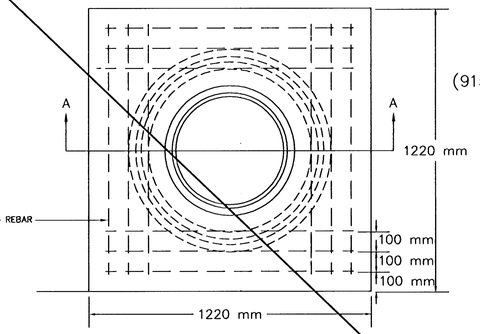

PRE-CAST CONCRETE SERVICE BOX

(915 mm I.D. X 1372 mm RCP) with 152 mm CAP

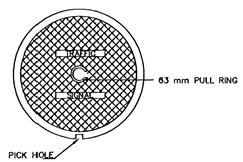

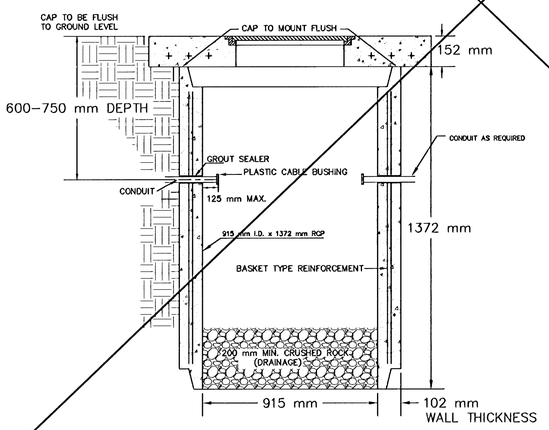

SECTION A-A

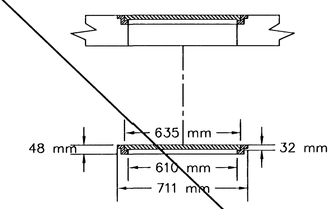

RING & COVER DETAIL

CONDUIT/DETECTOR WIRE INSTALLATION DETAILS

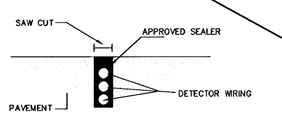

STD. CURB & GUTTER

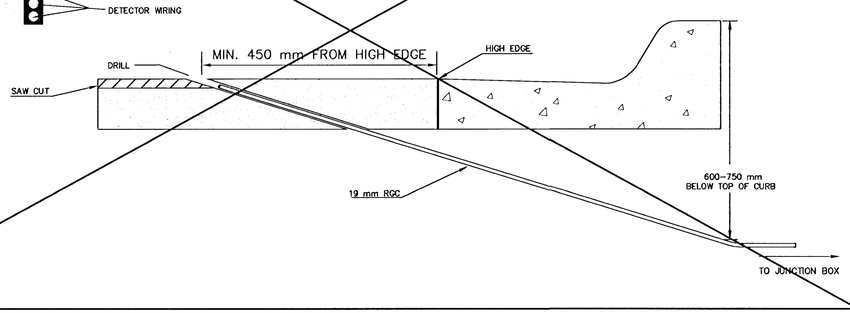

170 CONTROLLER PAD DETAILS

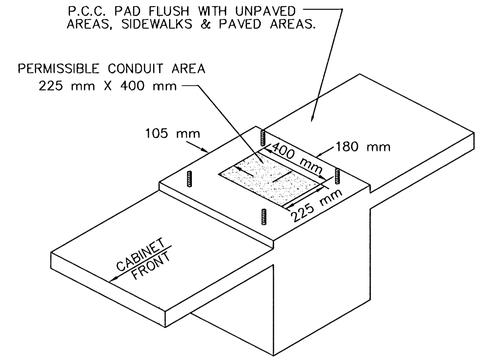

REBAR SHALL BE ASTM A615M GRADE 300 MEETING THE REQUIREMENTS OF SUBSECTION SPECIFICATIONS.

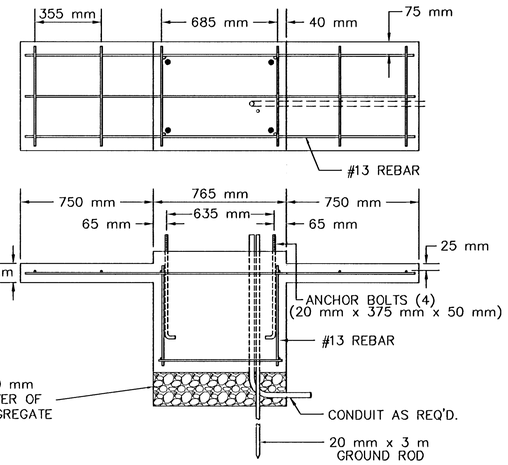

JUNCTION BOX DETAILS

PRE-FAB Junction Box (610 mm I.D. X 915 mm R.C.P.)

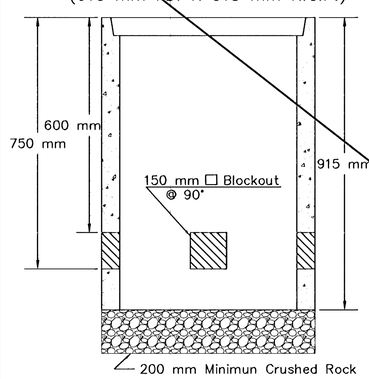

SECTION A-A

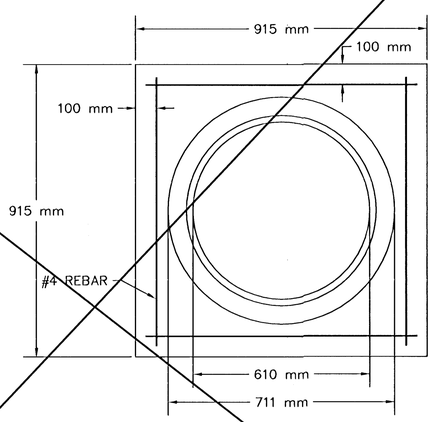

JUNCTION BOX CAP

915 mm x 915 mm x 152 mm TOP OF CAP TO BE FLUSH WITH GROUND LEVEL.

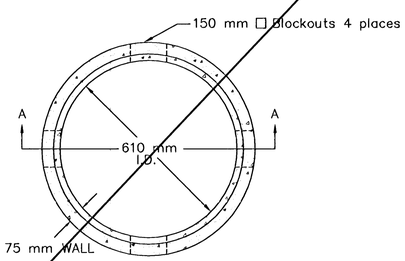

"SEE SERVICE BOX INSTALLATION FOR RING & COVER DETAILS.

NOTES:

SERVICE & JUNCTION BOX:

1. CONDUIT CONNECTION TO BE FLUSH TO WITHIN 125 mm OF INSIDE FACE OF SIDE WALL, CONDUIT TO DRAIN INTO SERVICE BOX.
2. CONDUIT CONNECTIONS TO SERVICE BOX SHALL BE TERMINATED WITH PLASTIC CABLE BUSHING.
3. CONDUIT SHALL BE SEALED WITH APPROVED SEALER AT INSIDE WALL FACE.
4. ALL SERVICE & JUNCTION BOXES TO HAVE 200 mm OF CRUSHED ROCK.

TRENCHING:

1. DEPTH TO BE 750 mm MINIMUM WITH ROCK & STUBBLE FREE BACKFILL TO SERVE AS BEDDING MATERIAL. MAINTAIN MINIMUM CONDUIT DEPTH IN TRENCH.
2. BACKFILL TO BE COMPACTED IN 150 mm LOOSE LIFTS BY HAND OR MECHANICAL TAMPING TO A 95% STANDARD DENSITY.

CONDUIT:

1. SLOPE CONDUIT TO DRAIN AS DIRECTED BY THE ENGINEER.
2. 75 mm RIGID STEEL CONDUIT BTWN. SERVICE BOXES.
   30 mm " " " BTWN. SERVICE & JUNCTION BOXES.
   20 mm " " " BTWN. JUNCTION BOXES.
   20 mm " " " BTWN. JUNCTION BOX & DETECTOR LOOP SAW CUT

REV. DATE	COMMENTS	INT

PROJECT DESCRIPTION

SERVICE/JUNCTION BOX, CONTROLLER PAD CONSTRUCTION/INSTALLATION DETAILS

PROJECT NUMBER

472-83519-PHASE II

DRAWN BY: T.M.	APPROVED BY	REVISED:
DATE: Feb. 96		DATE:

CITY OF WICHITA

DEPARTMENT OF PUBLIC WORKS

TRAFFIC ENGINEERING DIVISION	SCALE
WM. G. McKINLEY TRAFFIC ENGINEER	NO SCALE