| STATE | PROJECT NO. | YEAR | SHEET NO. | TOTAL SHEETS |
|---|---|---|---|---|
| KANSAS | 87 N-0287-01 | 2003 | 34 | 107 |

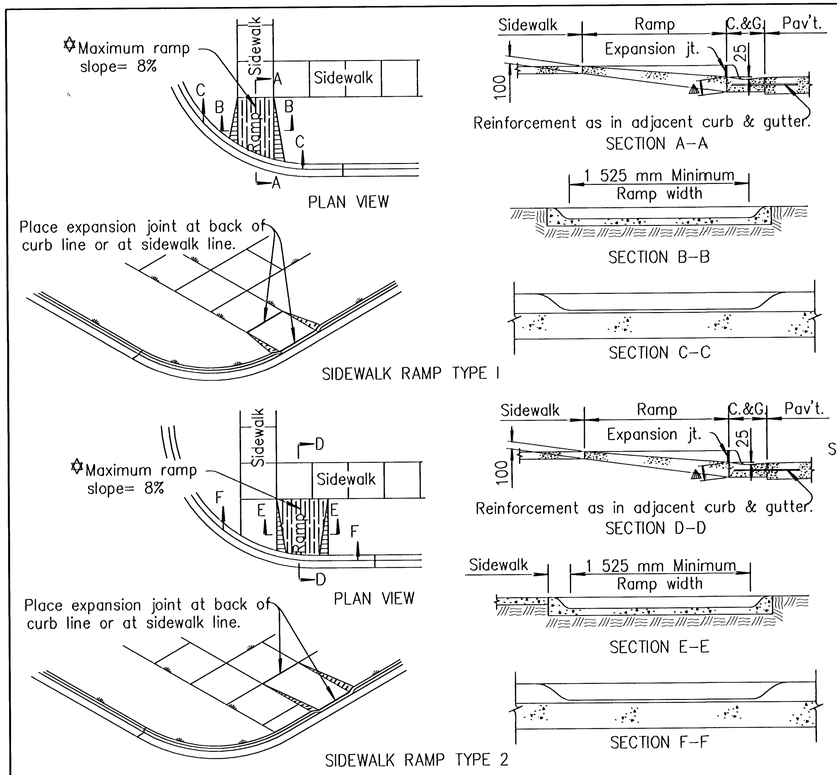


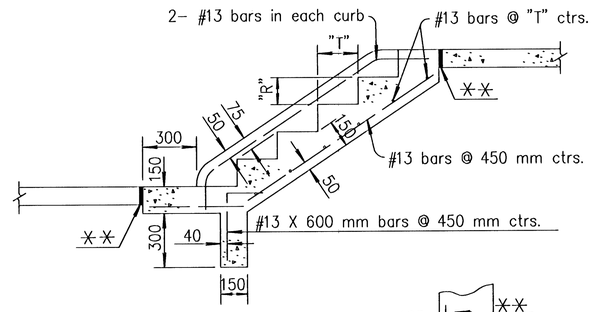


Step formula:
"R" x "T" = not less than 45,000 nor more than 48,400.
The maximum "R" = 170 mm
The minimum "T" = 280 mm

▲ Match thickness of back of Curb & Gutter.

✡ Maximum ramp slope in new construction shall be 8%. Desirable maximum ramp slope on existing sites shall be 8%. Where space limitations prohibit construction of 8% slopes at existing sites maximum slopes shall be as follows:
1:8 for a maximum rise of 75 mm
1:10 for a maximum rise of 150 mm

Note: Reinforcing bars shown are to be used only when more than four steps are necessary. Where field conditions permit, the steps should not be constructed too steep.

ϕ Expansion Joint (19 mm redwood board) placed at either back of curb line or at sidewalk line.

✳✳ Expansion joint (19 mm redwood board) located as shown.

◆ Variable width (1 525 mm min.). Entrance walk to be same width as approach walk. Sidewalk width of 1 220 mm may be used where existing conditions prohibit use of 1 525 mm

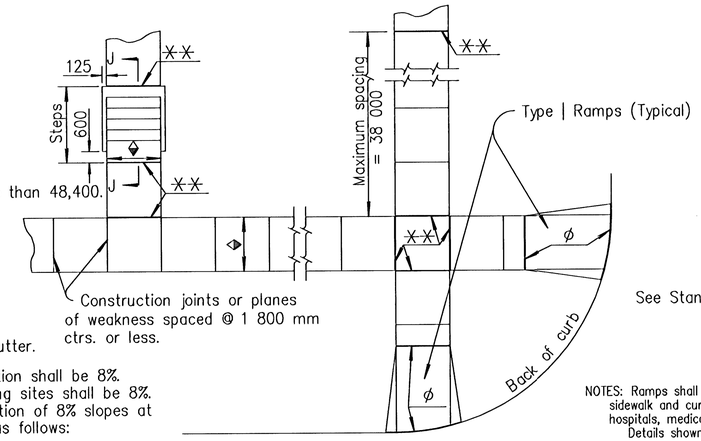


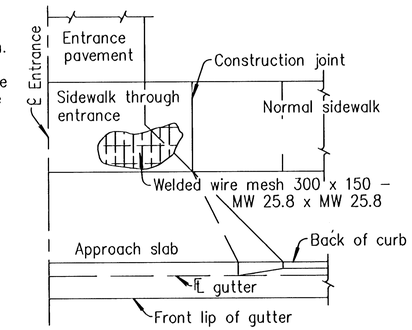


REINFORCEMENT DIAGRAM
SIDEWALK THROUGH ENTRANCE

See Standard Drawing RD683 SI for details of Alley and Entrance Pavement.

NOTES: Ramps shall be provided at all corners of street intersections where there is existing or proposed sidewalk and curb. Ramps shall also be provided at walk locations in mid-block in the vicinities of hospitals, medical centers and athletic stadiums.

Details shown on this sheet apply to all construction or reconstruction of streets, curbs or sidewalks.

Use of sidewalk ramp Type 2 shall be restricted to locations where is is not feasible to use Types 1 or 3.

Curb cut ramps are to be located as shown on the plans or as directed by the Engineer.

The normal gutter line profile shall be maintained through the area of the ramp.

If possible, drainage structures should not be placed in line with ramps. Except where existing drainage structures are being utilized in the new construction, location of the ramp should take precedence over location of drainage structure.

Sidewalks shall be ramped where the driveway curb is extended across the walk.

Care shall be taken to assure a uniform grade on the ramp, free of sags and short grade changes.

Expansion joints shall be placed in sidewalks as follows: In long runs, expansion joints shall be 19 mm redwood boards flush with the surface, at a maximum spacing of 38 m. This same joint should be used at sidewalk junctions as shown in Typical Plan.

Where the end of the sidewalk abuts a curb, a 19 mm redwood board flush with the surface shall be used.

Where the sidewalk is parallel and adjacent to a rigid structure, a 13 mm premoulded joint filler (Nonextruding, Type B) shall be used.

Sidewalk shall slope toward the street at a maximum of 2%, and where necessary, may be depressed or sloped to fit alleys and entrances as shown on the plans or as directed by the Engineer.

Where clear width of sidewalk between top of ramp and building or other obstruction is less than 1 220 mm, the slope of the flared sides shall not exceed 8%.

Where sidewalk is shown to be constructed back of an entrance it shall be 150 mm thick with welded wire mesh reinforcement of the same gauge and spacing of wires as in entrance pavement, as shown in the Reinforcement Diagram. Bid item will be "Sidewalk Construction (150 mm) either with or without air entrainment.

Where the plans do not require air entrainment for sidewalk and sidewalk ramps, at the Contractor's option, Grade 25 Concrete (AE) maybe used throughout. Payment will be made as square meters of Sidewalk Construction.

At the Contractor's option Grade 25 Concrete (AE) may be used throughout for construction of steps, but payment will be made as Grade 25 Concrete.

Surface texture of the ramp shall be that obtained by a coarse brooming or steel tining transverse to the slope of the ramp and shall be sufficient to provide a ramp surface which contrasts with adjacent surfaces.

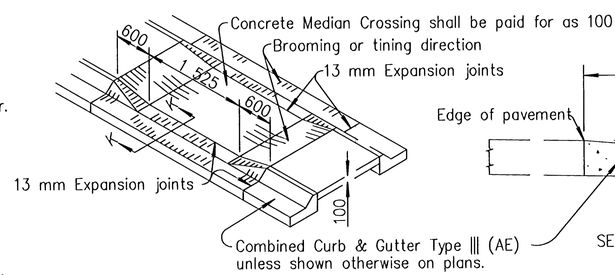


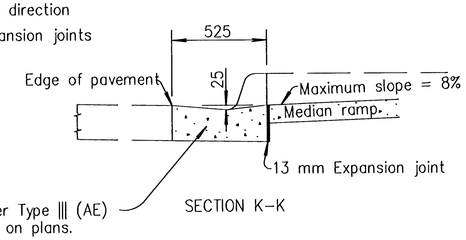


Shaping of curb and gutter and median crossing to be subsidiary to other bid items.

Note: A Median Ramp Crossing shall be constructed at Crosswalk locations.

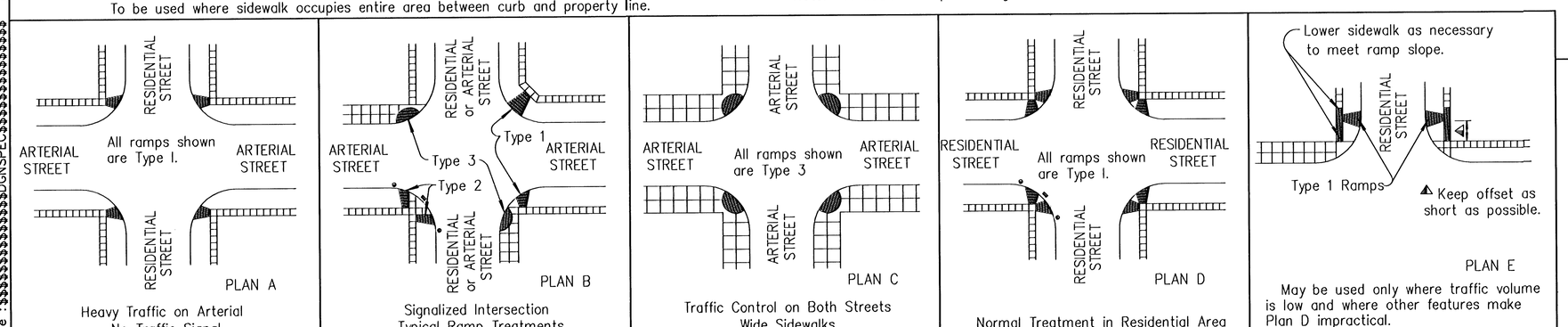


LEGEND

- Sidewalk Ramp Type 1
- Sidewalk Ramp Type 2
- Sidewalk Ramp Type 3
- Preferred location of drainage inlet (Typical)
- Alternate location of drainage inlet (Typical)
- Sidewalk

| NO. | DATE | REVISIONS | BY | APP'D |
|---|---|---|---|---|
| 3 | | | | |
| 2 | 4-30-02 | Rev. concrete from Class to Grade. | S.W.K. | J.O.B. |
| 1 | 6-26-97 | Revised ramp thickness | R.J.S. | J.O.B. |

KANSAS DEPARTMENT OF TRANSPORTATION

# SIDEWALK & STEPS

RD690 SI

| | | | |
|---|---|---|---|
| FHWA APPROVAL | 5-01-02 | APP'D. James O. Brewer | |
| DESIGNED | DETAILED | QUANTITIES | TRACED Bowser |
| DESIGN CK. | DETAIL CK. | QUAN.CK. | TRACE CK. Seitz |

Drawn By $$USERNAME$$ Plotted $$$$S$TIME$$$$$
File - $$$$$$$$$$$$$$$$DGNSPEC$$$$$$$$$$$$$$$$