FHWA REGION NO.	STATE	PROJECT NO.	YEAR	SHEET NO.	TOTAL SHEETS
7	KS.	87-U-1362-01	1993	48	149

NOTE: SLOPE OF INLET TOPS TO MATCH SIDEWALK OR PARKING SLOPES WITHIN LIMITS INDICATED.

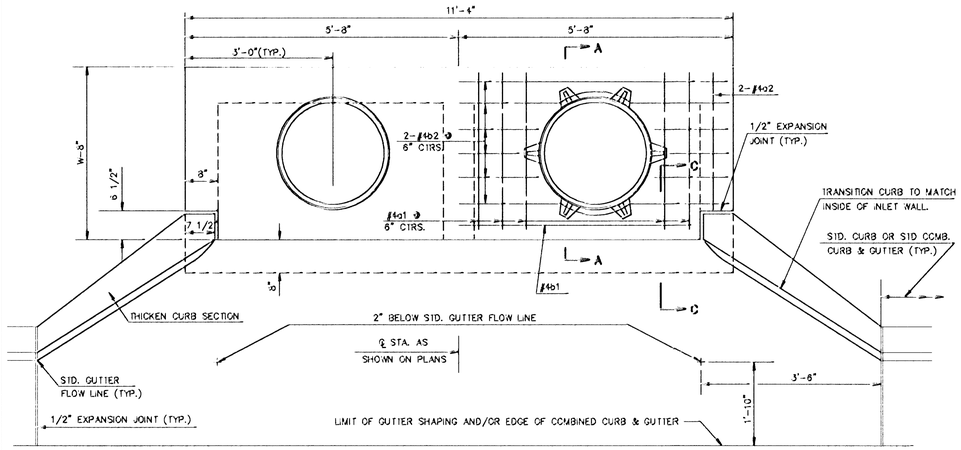

SLAB REINFORCING NOT SHOWN SHOWING SLAB REINFORCING

PLAN

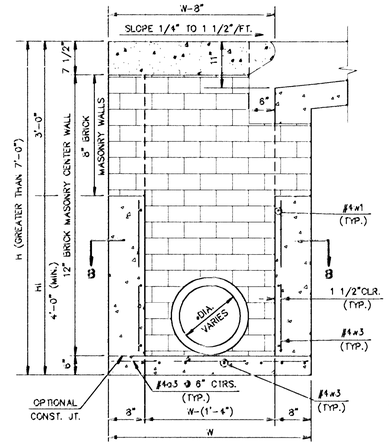

TYPICAL INLET SECTION AT CENTER WALL

(REINFORCED CONCRETE WALLS)

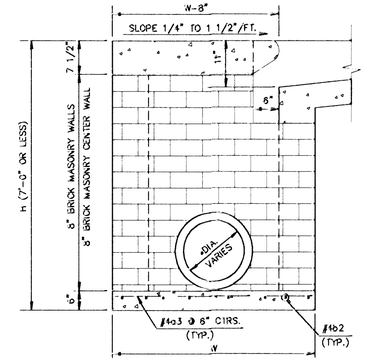

TYPICAL INLET SECTION AT CENTER WALL

(MASONRY WALLS)

* A CENTER WALL OPENING SHALL BE PROVIDED BY MEANS OF A SECTION OF REINFORCED CONCRETE PIPE. SEE CASE I AND CASE II BELOW.

PLAN

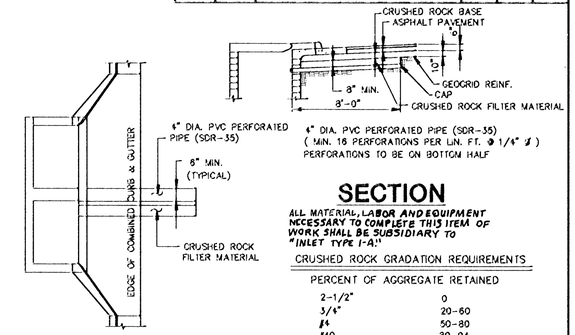

4" DIA. PVC PERFORATED PIPE (SDR-35)
(MIN. 16 PERFORATIONS PER LIN. FT. @ 1/4" ø)
PERFORATIONS TO BE ON BOTTOM HALF

SECTION

ALL MATERIAL, LABOR AND EQUIPMENT NECESSARY TO COMPLETE THIS ITEM OF WORK SHALL BE SUBSIDIARY TO "INLET TYPE 1-A".

CRUSHED ROCK GRADATION REQUIREMENTS

PERCENT OF AGGREGATE RETAINED	
2-1/2"	0
3/4"	20-60
#4	50-80
#40	80-94
P-200	90-98

ROCK QUALITY SHALL CONFORM TO THE REQUIREMENTS SPECIFIED BY KDOT 1990 EDITION STANDARD SPECIFICATION SUBSECTION 1102 FOR DURABILITY CLASS I.

PAVEMENT UNDERDRAIN DETAIL

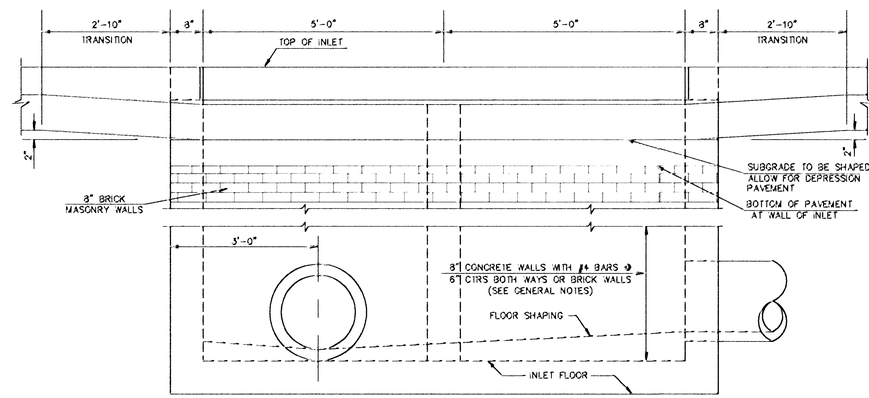

ELEVATION

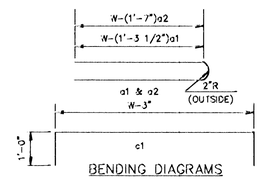

BENDING DIAGRAMS

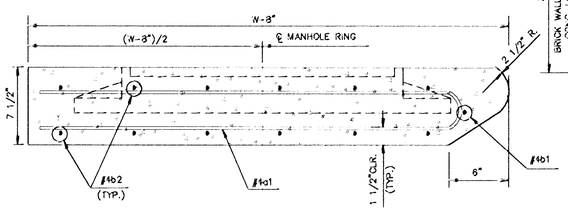

SECTION A-A

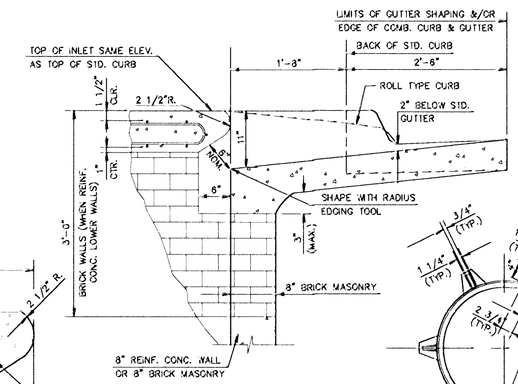

SECTION C-C

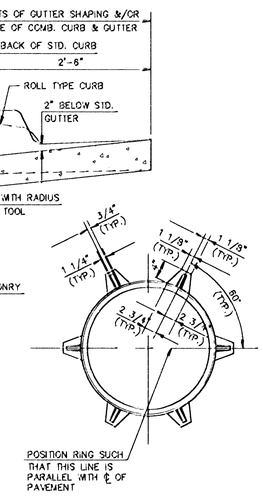

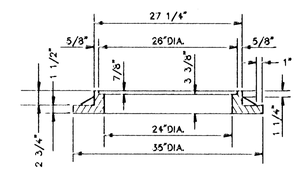

CAST IRON INLET RING

WT.=180 LBS.

SEE CITY OF WICHITA STANDARD MANHOLE FRAME AND COVER DETAIL SHEET FOR COVER DETAILS TO BE USED WITH INLET FRAME.

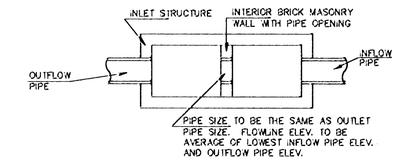

CASE I

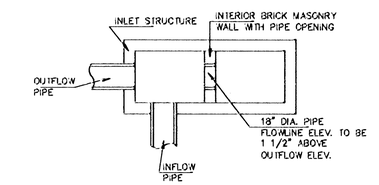

CASE II

NOTE: CENTER WALL PIPE SIZE SHALL BE AS SPECIFIED IN INLET CONSTRUCTION NOTE ON THE PLAN/PROFILE SHEETS FOR THOSE CASES NOT SHOWN HERE.

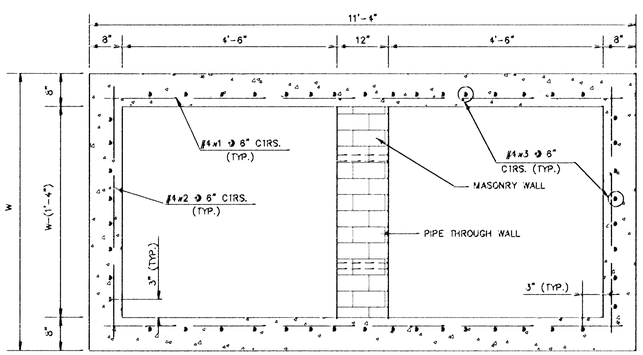

SECTION B-B

SLAB AND FLOOR REINFORCING

		W=4'-4"		W=5'-4"		W=6'-4"		W=7'-4"		W=8'-4"	
MARK	SIZE	NO.	LENGTH	NO.	LENGTH	NO.	LENGTH	NO.	LENGTH	NO.	LENGTH
a1	#4	13	6'-7 1/4"	13	8'-7 1/4"	13	10'-7 1/4"	13	12'-7 1/4"	13	14'-7 1/4"
a2	#4	2	6'-0"	2	8'-0"	2	10'-0"	2	12'-0"	2	14'-0"
a3	#4	20	6'-1"	20	5'-1"	20	6'-1"	20	7'-1"	20	8'-1"
b1	#4	1	9'-8"	1	9'-8"	1	9'-8"	1	9'-8"	1	9'-8"
*b2	#4	18	11'-1"	24	11'-1"	30	11'-1"	36	11'-1"	42	11'-1"

WALL REINFORCING

		W=4'-4"		W=5'-4"		W=6'-4"		W=7'-4"		W=8'-4"	
MARK	SIZE	NO.	LENGTH	NO.	LENGTH	NO.	LENGTH	NO.	LENGTH	NO.	LENGTH
w1	#4	①	11'-1"	①	11'-1"	①	11'-1"	①	11'-1"	①	11'-1"
w2	#4	①	6'-1"	①	5'-1"	①	6'-1"	①	7'-1"	①	8'-1"
w3	#4	②	③	②	③	②	③	②	③	②	③

* FIELD BEND OR CUT REINFORCING AS REQUIRED FOR CLEARANCE
① X(H1-8")+4", (H1-8") ROUNDED DOWN TO NEAREST 0.5'
② 40+X(W-16")
③ H1+(9")

GENERAL NOTES

1. THE CONTRACTOR SHALL BE REQUIRED TO CONSTRUCT 8" BRICK MASONRY WALLS BETWEEN THE CONCRETE INLET BASE AND TOP ON THIS INLET WHEN W=6'-4" OR LESS AND H=7'-0"OR LESS. WHEN W IS GREATER THAN 6'-4" AND H IS LESS THAN 7'-0". THE OUTSIDE INLET WALLS BELOW THE BRICK STACK SHALL BE REINFORCED CONCRETE CONSTRUCTION AND THE CENTER WALL SHALL BE OF MASONRY CONSTRUCTION AS SHOWN FOR THE MASORY WALL OPTION.
2. INLET INVERT SHALL BE SHAPED WITH 8 SACK SAND MIX CONCRETE TO CREATE FLOW CHANNELS AND TO INCREASE HYDRAULIC EFFICIENCY SUCH THAT THE INLET WILL BE SELF CLEANING BETWEEN ALL INLET AND/OR OUTLET PIPES.
3. CONCRETE TOPS TO BE INSTALLED ON THIN MORTAR CUSHION TO INSURE FULL SUPPORT ALONG BRICK WALLS. CONRETE TOPS MAY BE CAST IN PLACE OR PRECAST. CONCRETE USED FOR INLET CONSTRUCTION SHALL BE CONCRETE PAVEMENT MIX.
4. INLET TOP REINFORCING SHALL BE SPACED ON 6"MAX. CENTERS. INLET LIDS SHALL BE NOTCHED OUT AS INDICATED TO FACILITATE CONSTRUCTION OF CURB. BARS IN INLET TOP TO BE FIELD BENT OR CUT TO CLEAR MANHOLE RING.
5. THE ENDS OF ALL PIPES INSTALLED IN INLETS SHALL BE CUT OFF FLUSH WITH THE INSIDE FACE OF THE INLET WALL.

STANDARD CURB INLET PRECAST TOPS

W	PRE-CAST TOP SIZE	PIPE SIZE	CU. YD. CONC.
4'-4"	3'-8"x11'-4"x7 1/2"	21" & SMALLER	0.83±
5'-4"	4'-8"x11'-4"x7 1/2"	24" & 30"	1.09±
6'-4"	5'-8"x11'-4"x7 1/2"	36" & 42"	1.35±
7'-4"	6'-8"x11'-4"x7 1/2"	48" & 54"	1.61±
8'-4"	7'-8"x11'-4"x7 1/2"	60" & 66"	1.87±

REVISED: 12-5-88 C.O.W.

STANDARD TYPE 1A CURB INLET

INLET OPENING=6"x10'-0"

PROJ. NO. 87-U-1362-01	NOV. 1984		
CITY OF WICHITA, KANSAS			
Design BER KJS MWB	Checked by	Checked by	
Drawn by	Date	Date	Job No.