FHWA REGION NO.	STATE	PROJECT NO.	YEAR	SHEET NO.	TOTAL SHEETS
7	KS.	87-U-1362-01	1993	60	149

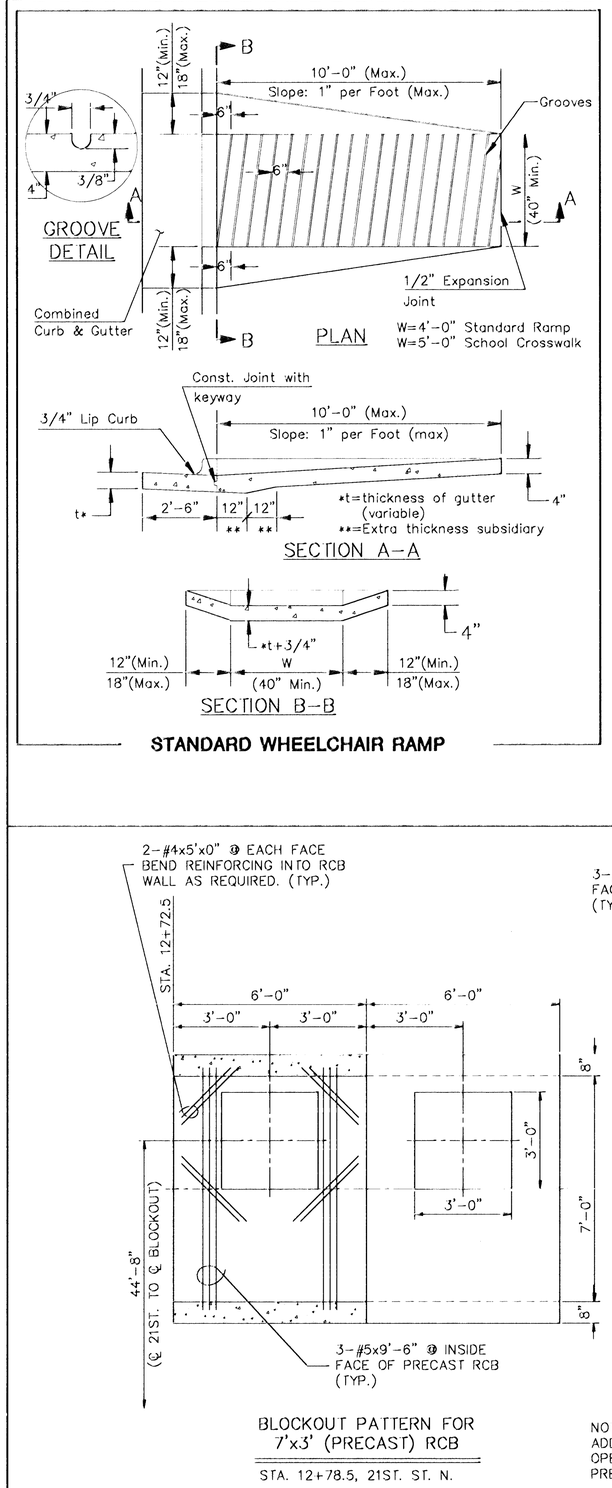

STANDARD WHEELCHAIR RAMP

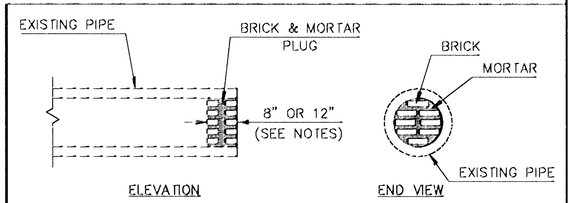

PIPE PLUGGING DETAIL

NOTE:

PIPE PLUGS SHALL BE CONSTRUCTED OF BRICK MASONRY, WITH CONSTRUCTION REQUIREMENTS AND MATERIALS CONFORMING TO THE SAME REQUIREMENTS AS SPECIFIED FOR MASONRY CONSTRUCTION IN THE STD. SPECS. PIPES HAVING DIAMETERS OF 18" OR SMALLER SHALL BE PLUGGED WITH 8" THICK PLUGS. PIPES HAVING DIAMETERS LARGER THAN 18" SHALL BE PLUGGED WITH 12" THICK PLUGS. THE CONSTRUCTION OF PIPE PLUGS SHALL NOT BE PAID FOR DIRECTLY, BUT SHALL BE CONSIDERED SUBSIDIARY TO PIPE INSTALLATION.

THE CONTRACTOR MAY USE OTHER METHODS TO PLUG EXISTING PIPE IF APPROVED BY THE PROJECT ENGINEER.

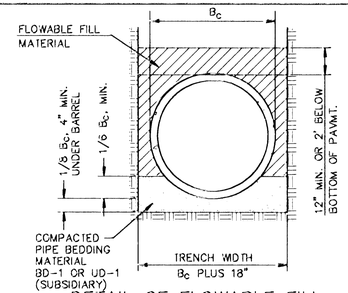

DETAIL OF FLOWABLE FILL FOR STORM SEWER PIPE EXCEPT CORRUGATED METAL PIPE.

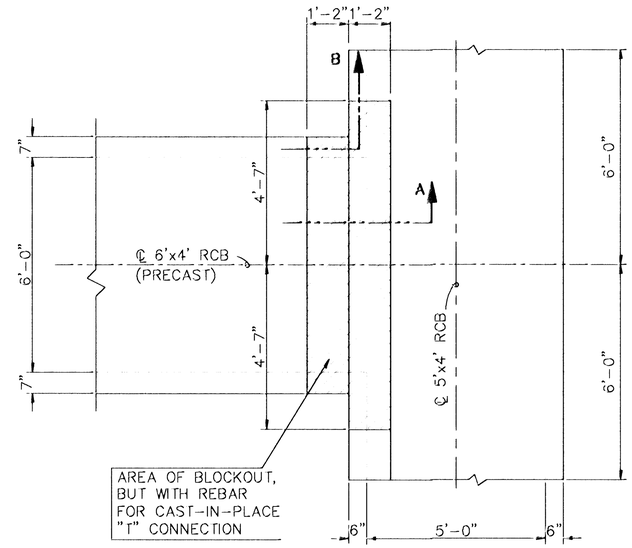

PLAN

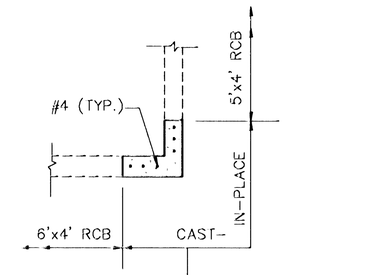

SECTION B

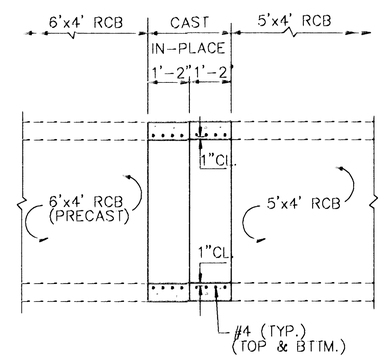

SECTION A

SPECIAL 6'x4' RCB – 5'x4' RCB CAST-IN-PLACE "T"

STA. 41+45.5, (WEBB RD.), LINE 1

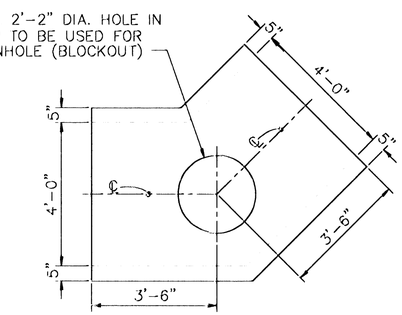

45° TURN – 4'x3' RCB (PRECAST)

STA. 51+13.5 (WEBB RD.), LINE 2
STA. 11+13.5 (21ST. ST.), LINE 2

BLOCKOUT PATTERN FOR 7'x3' (PRECAST) RCB

STA. 12+78.5, 21ST. ST. N.

NOTE:
ADDITIONAL REINFORCING AND FORMING OPENINGS SHALL BE SUBSIDIARY TO PRECAST RCB BEING BID.

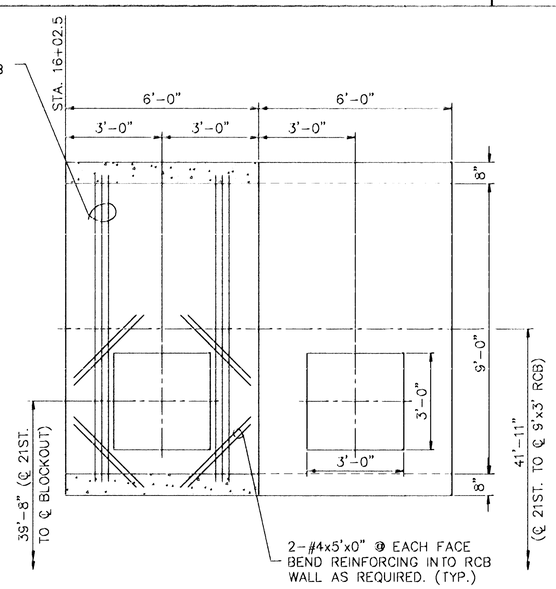

BLOCKOUT PATTERN FOR 9'x3' (PRECAST) RCB

STA. 16+08.5, 21ST. ST. N.

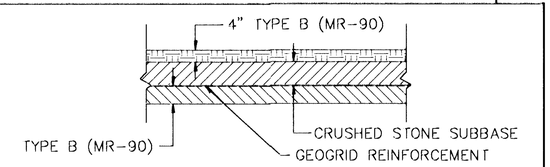

EMERGENCY VEHICLE ACCESS DETAIL

STA. 57+42, WEBB RD.
STA. 59+60, WEBB RD.
STA. 64+38, WEBB RD.

NOTE:
AT CHANGE IN RCB SECTION PROVIDE CLOSURE CONCRETE STRIP 8" THICK WITH #4@12" EACH WAY.

KANSAS DEPARTMENT OF TRANSPORTATION

WEBB ROAD

SPECIAL DETAILS

PROJECT NO. 87-U-1362-01 SEDGWICK CO.

MID-KANSAS ENGINEERING CONSULTANTS, INC.

WICHITA, KANSAS

DESIGNED BY:		CHECKED BY:	
DRAWN BY:		DATE: NOV. 1992	SHEET 60 OF 149

SPECDET 60