FHWA REGION NO.	STATE	PROJECT NO.	YEAR	SHEET NO.	TOTAL SHEETS
7	KANSAS	87-U-1362-01	1993	53	149

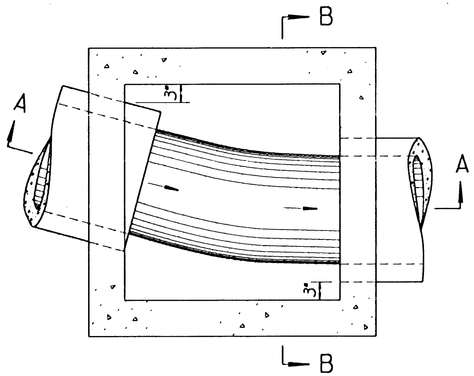

PLAN - FLOOR (Example I)

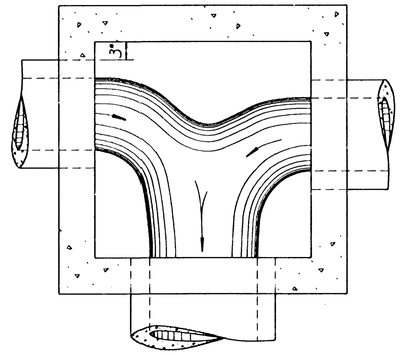

PLAN - FLOOR (Example III)

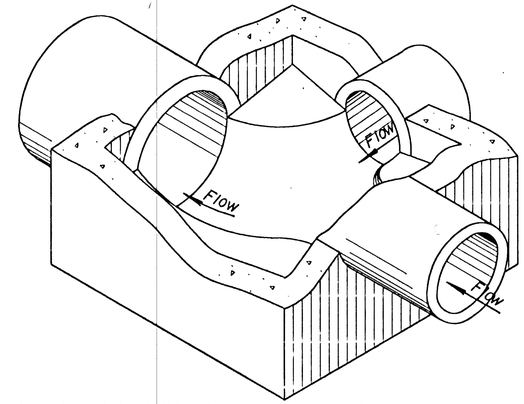

Floor of manhole shall be shaped as shown in the examples to increase hydraulic efficiency.

ISOMETRIC VIEW (Example IV)

Note: Use Class A Concrete throughout. All exposed edges shall be finished with an edging tool.

At the contractors option Class A Concrete (AE) or mix used in concrete pavement may be used throughout.

In general, pipes will enter and leave manhole at various positions. Where possible bend bars around pipes.

Floor of manhole shall be shaped as shown in various "EXAMPLES" with unreinforced Class "A" Concrete.

Manhole opening and steps, where used, shall be placed to afford easy access to top of shaped invert. Top reinforcing bars shall be adjusted accordingly.

All castings shall be gray iron and shall comply with the KDOT Standard Specifications.

All exposed cast iron surfaces not subjected to traffic shall be painted with a coat of inorganic zinc primer and then with a topcoat or a field coat of organic zinc, each coat to be 3 to 4 mils.

No deductions in concrete quantities shall be made for pipe openings or additions to concrete quantities shall be made for shaping floor of manholes.

The top of the manhole shall be sloped slightly to approximately fit the ground line or other condition as directed by the Engineer.

Dimensions and weights of cast iron as shown on this sheet are minimum. Larger dimensions and/or heavier weights of cast iron may be used.

The Contractor has the option of using precast manholes, as approved by the Engineer.

Steps shall be installed in all manholes when specified in the plans or when "H" is equal to or greater than six feet. Steps shall comply with the requirements of the KDOT Standard Specification.

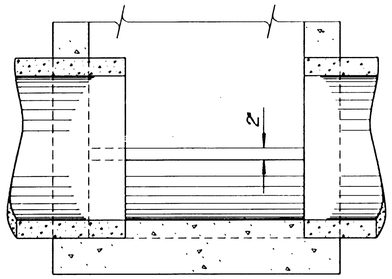

SECTION A-A (Example I)

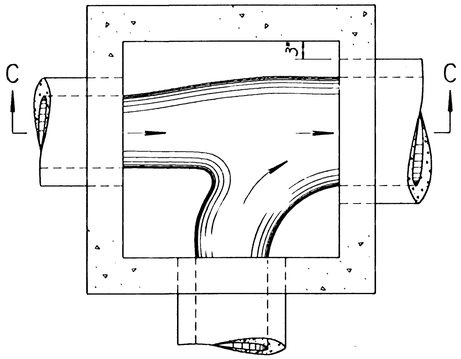

PLAN - FLOOR (Example IV)

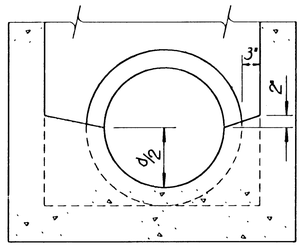

SECTION B-B (Example I)

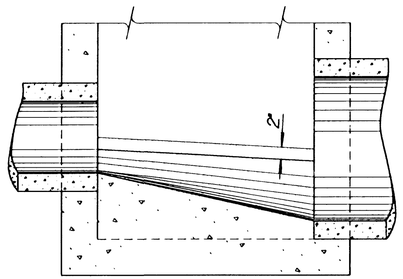

SECTION C-C (Example IV)

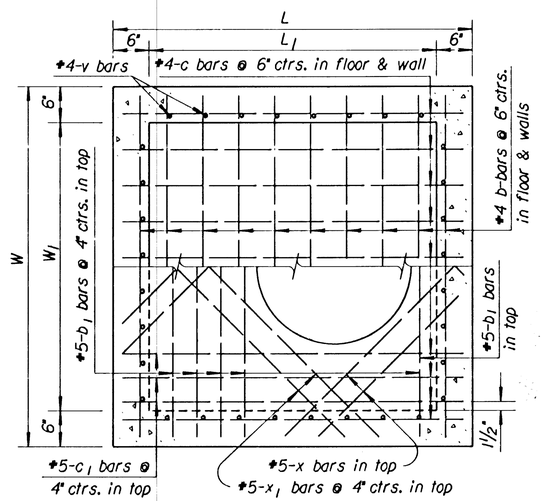

PLAN (Showing top & floor reinf.)

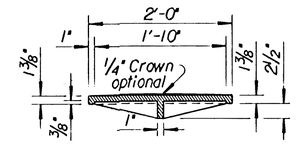

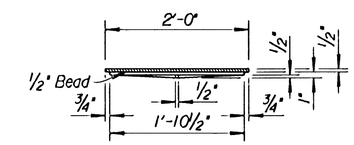

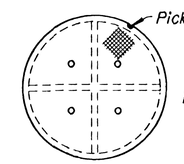

NOTE: All manhole castings are cast iron. Weight of castings includes no allowance for fillets and overruns.

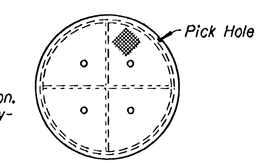

MANHOLE COVER TYPE A & B
(Weight=134 lbs.; without ¼" Crown= 125 lbs.)

MANHOLE COVER TYPE C
(Weight= 64 lbs.)

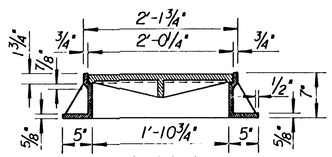

TYPE A

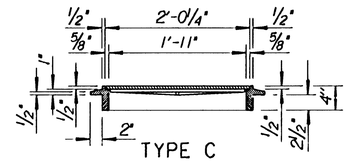

TYPE C

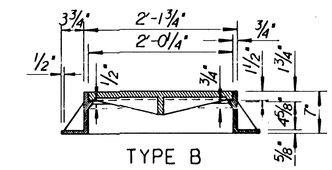

TYPE B

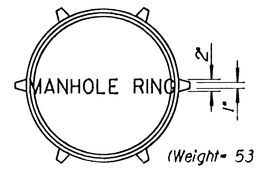

(Weight= 53 lbs.)

*LIGHT TYPE
MANHOLE COVER & RING

*Rings with four equally spaced lugs will be permitted.

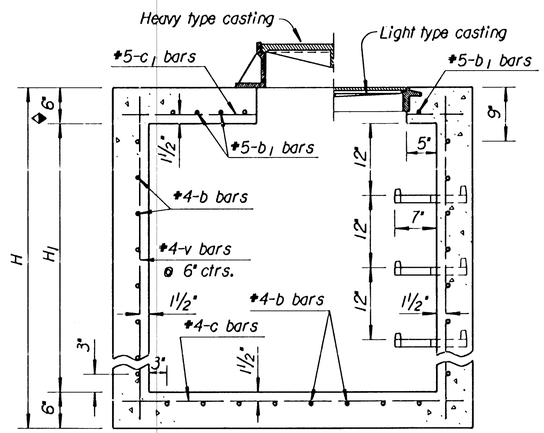

◆Where dimension "L" or "W" is greater than 6'-0" use 8" slab thickness.

SECTION (Exclusive of floor shaping)

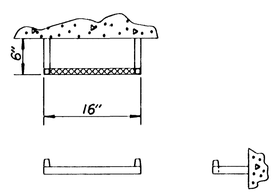

STEP DETAILS

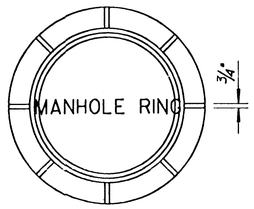

(Type A Ring= 192 lbs., Type B Ring= 198 lbs.)

HEAVY TYPE
MANHOLE COVER AND RING

Note: Either Type A or Type B may be used.

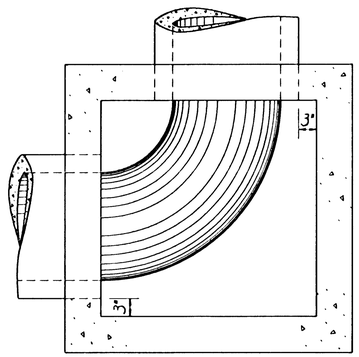

PLAN - FLOOR (Example II)

NO.	DATE	REVISIONS	BY	APP'D
28	1-30-92	Rev. paint&step notes, ent. on CADD	R.J.S.	J.O.B.

KANSAS DEPARTMENT OF TRANSPORTATION

REINFORCED CONCRETE MANHOLE

STD. NO. 633

FHWA APPROVAL	2-27-92	APP'D James O. Brewer	
DESIGNED	DETAILED	QUANTITIES	TRACED Bowser
DESIGN CK.	DETAIL CK.	QUAN.CK.	TRACE CK. Seitz