FHWA REGION NO.	STATE	PROJECT NO.	YEAR	SHEET NO.	TOTAL SHEETS
7	KS.	87-U-1362-01	1993	93	149

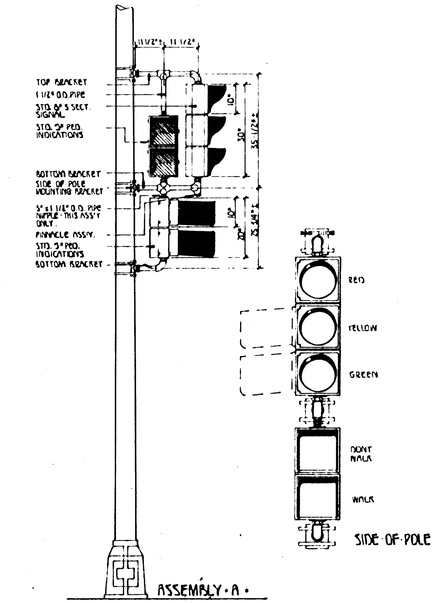

ASSEMBLY • A •

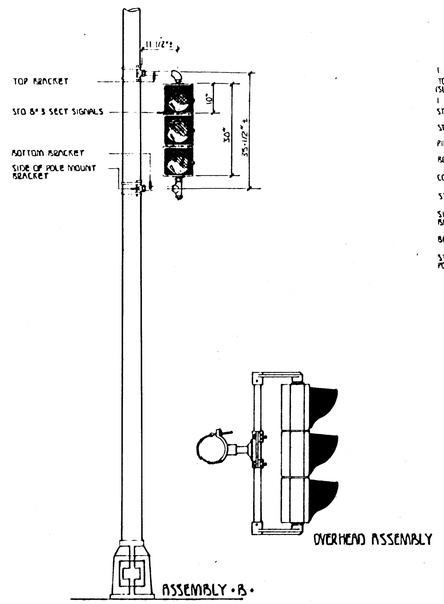

ASSEMBLY • B •

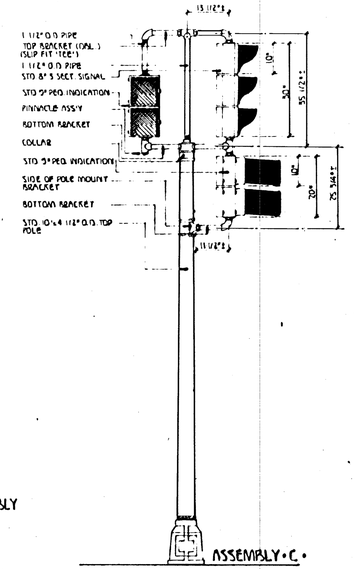

ASSEMBLY • C •

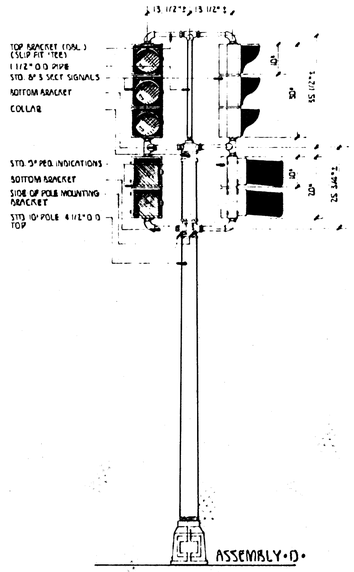

ASSEMBLY • D •

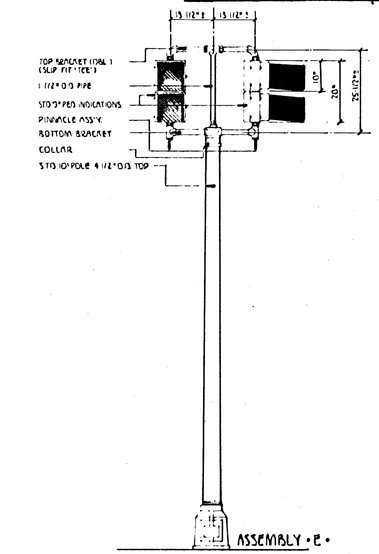

ASSEMBLY • E •

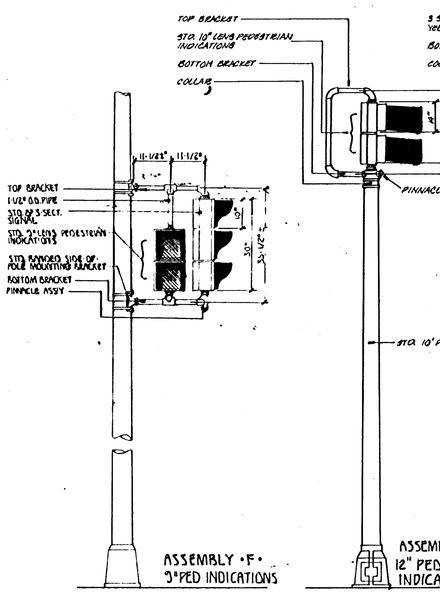

ASSEMBLY • F •
3" PED INDICATIONS

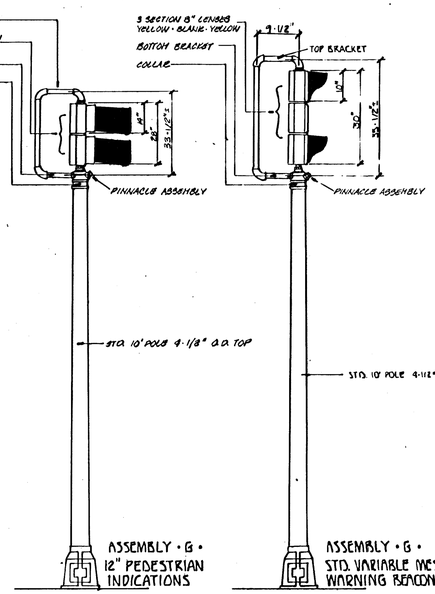

ASSEMBLY • G •
12" PEDESTRIAN INDICATIONS

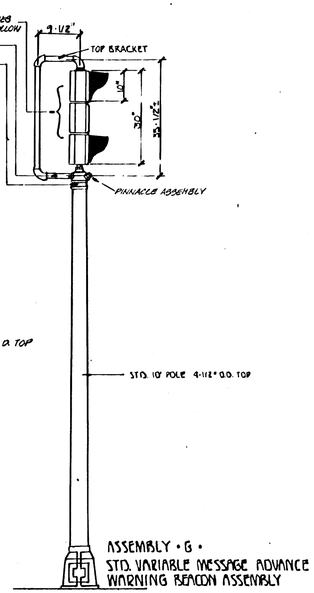

ASSEMBLY • G •
STD. VARIABLE MESSAGE ADVANCE WARNING BEACON ASSEMBLY

BRACKET DETAILS

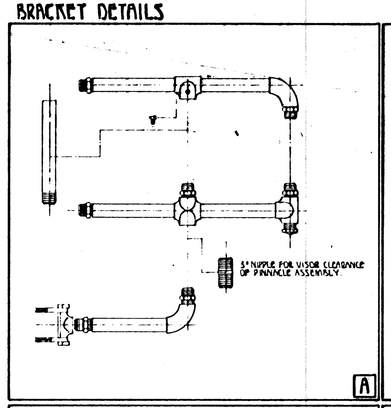

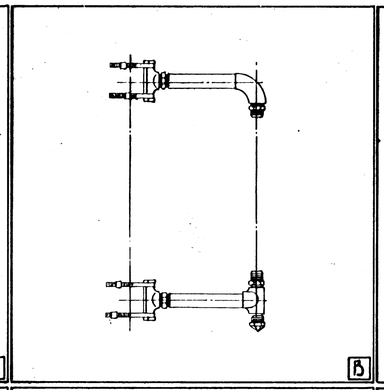

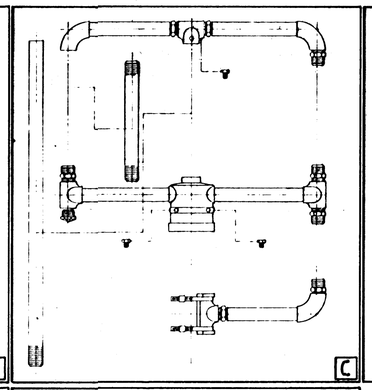

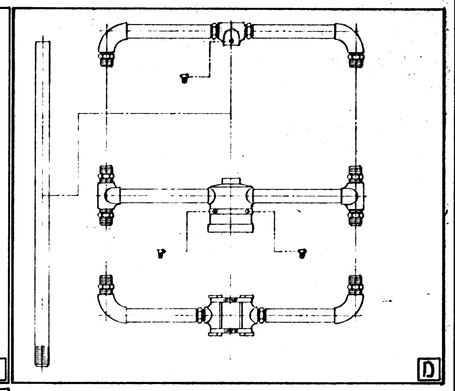

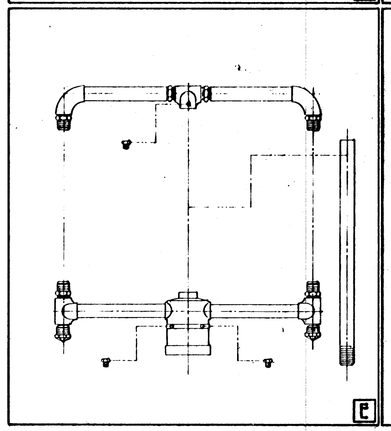

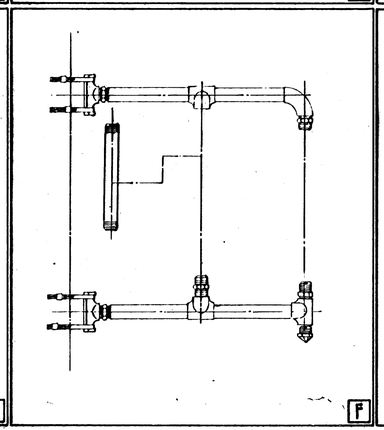

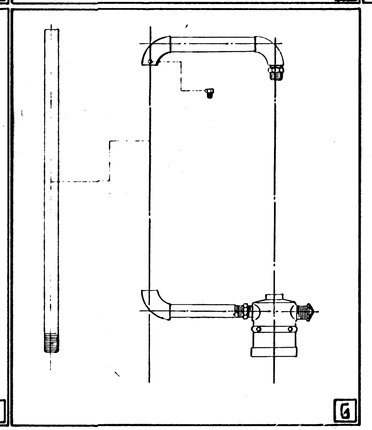

ALL DIMENSIONS BASED ON STD. 8" LENS, 3-SECTION SIGNAL WITH 3" PEDESTRIAN INDICATIONS.
DO NOT SCALE. FOR INFORMATION ONLY.

REVISION DATE	COMMENTS	INT.
APR. 89	B	JD
FEB. 86	D - ASSEMBLY & DETAIL	JD
AUG. 87	F - ASSEMBLY & DETAIL	JD
OCT. 89	G - W/PED INDICATIONS (12")	JD

PROJECT DESCRIPTION
TYPICAL BRACKET ASSEMBLY DETAILS FOR STD. SIDE-OF-POLE AND POST-TOP MOUNTED SIGNALS

PROJECT NUMBER
87-U-1362-01

BOOK NO.	APPROVED BY	DATE
DRAWN BY SEAL		REVISED

CITY OF WICHITA
DEPARTMENT OF PUBLIC WORKS
DIVISION OF TRAFFIC ENGINEERING
WM. G. McKINLEY, TRAFFIC ENGINEER

SCALE NONE

91-56-113 93