FHWA REGION NO.	STATE	PROJECT NO.	FISCAL YEAR	SHEET NO.	TOTAL SHEETS
7	KANSAS	87 N-0303-01	2003	59	143

7'0" x 6'0" RCBC with MANHOLE STACK
(4'6" MIN to 7'0" MAXIMUM HEIGHT BRICK STACK)

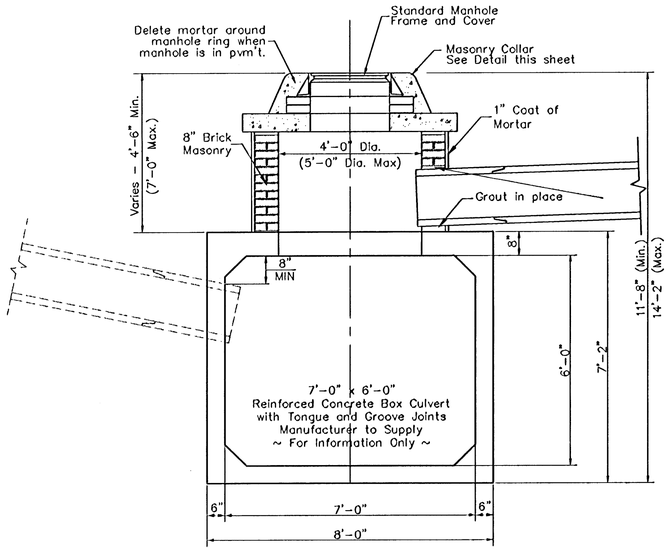

7'0" x 6'0" RCBC with MANHOLE STACK
(4'6" MAXIMUM HEIGHT BRICK STACK)

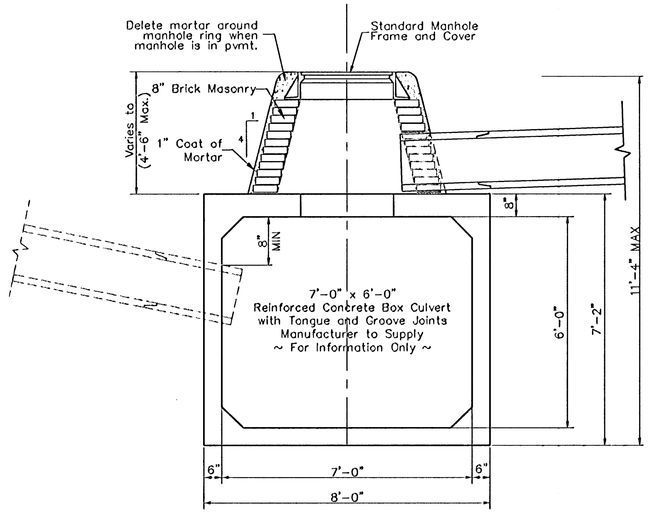

MASONRY COLLAR DETAIL

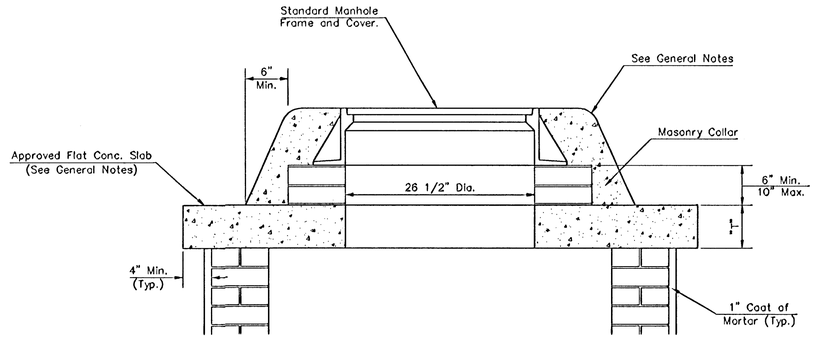

FOR INFORMATION ONLY

TYPE 1 INLET w/ DROP THROUGH BOTTOM OVER RCBC (7' -0" x 6' -0" SHOWN)

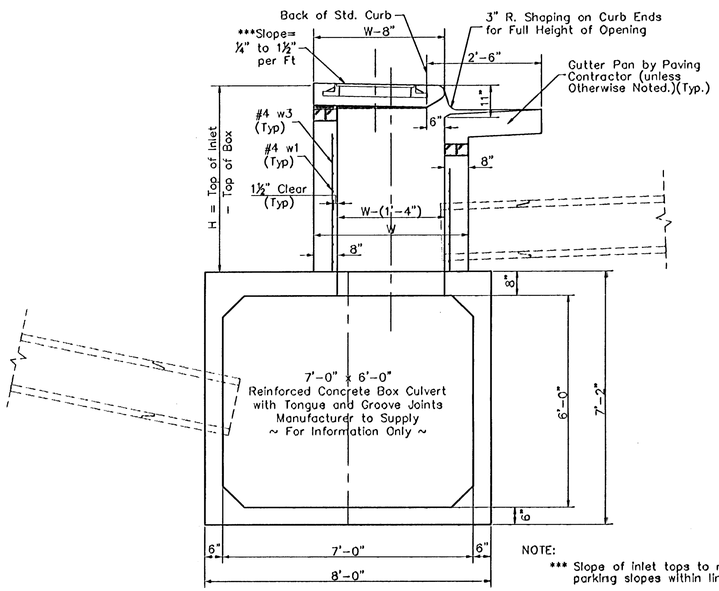

NOTE:
*** Slope of inlet tops to match sidewalk of parking slopes within limits indicated

7'0" x 6'0" RCBC with MANHOLE STACK
(With CLOSE CONNECTION TYPE 1 INLET)

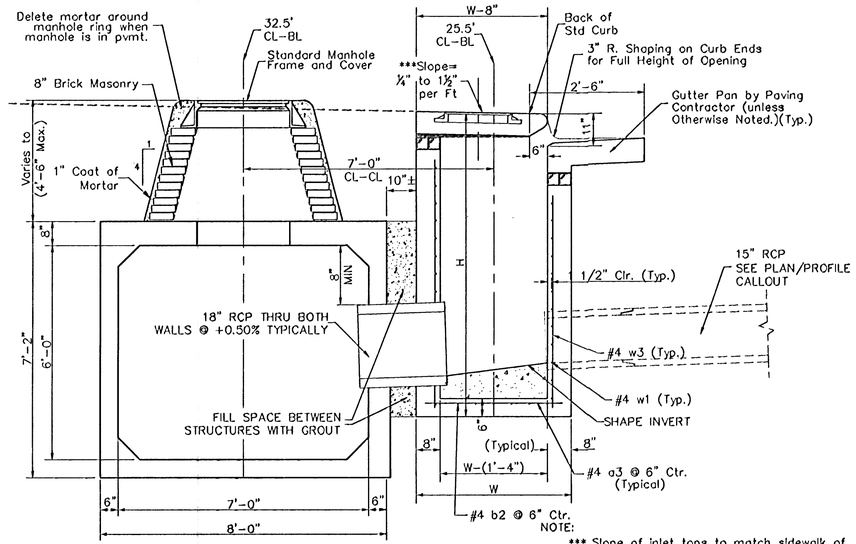

NOTE:
*** Slope of inlet tops to match sidewalk of parking slopes within limits indicated

PROJECT NUMBER	SHEET NAME	ENGINEERING DIRECTORY
472-83902	SPCLDTL	F:\ENG\HYD2\SWS

DESIGN	DRAWN	APPROVED	DATE	SCALE	BAUGHMAN NO
KK	STAFF	JFB	March 04	NONE	472-83324

CAPITAL IMPROVEMENT PROJECT
HYDRAULIC PH2 STORM WATER SEWER SPECIAL RCBC DETAILS

BAUGHMAN COMPANY, P.A.
ENGINEERING, SURVEYING, & PLANNING
316-262-7271 • 315 ELLIS • WICHITA, KANSAS 67211

SHEET 59 OF 143