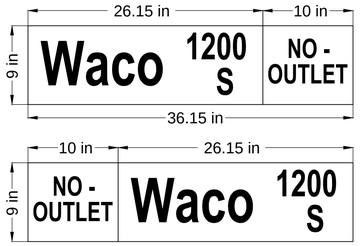

High Intensity Prismatic Yellow
Black Letters

3 INCH TEXT HWY D FONT

3 INCH TEXT HWY D FONT

4.5 inch lower case text HWY D font
6 INCH UPPER CASE TEXT HWY D FONT

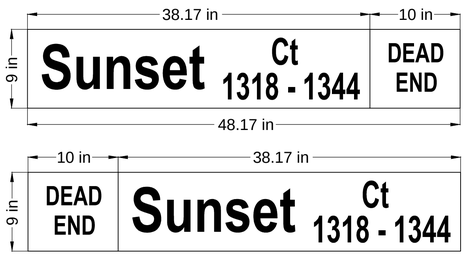

High Intensity Prismatic Yellow
Black Letters

3 INCH TEXT HWY D FONT

3 INCH TEXT HWY D FONT

4.5 inch lower case text HWY D font
6 INCH UPPER CASE TEXT HWY D FONT

DETAIL A
9" STANDARD

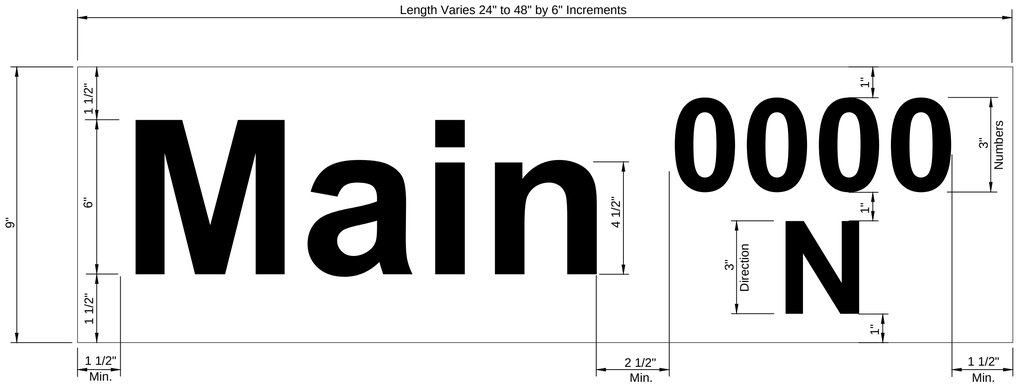

DETAIL B
9" METRO

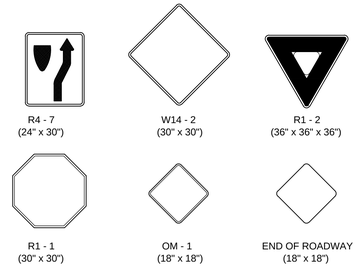

* IN NO CASE SHALL THE SPECIFICATIONS BE LESS THAN REQUIRED BY THE CURRENT MUTCD.

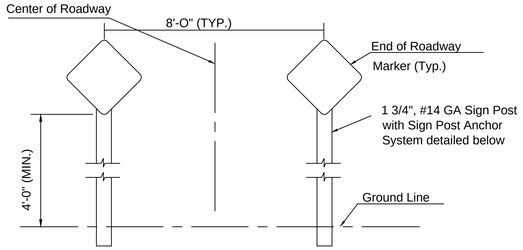

TYPICAL END OF ROADWAY SIGN MOUNTING INSTALLATION

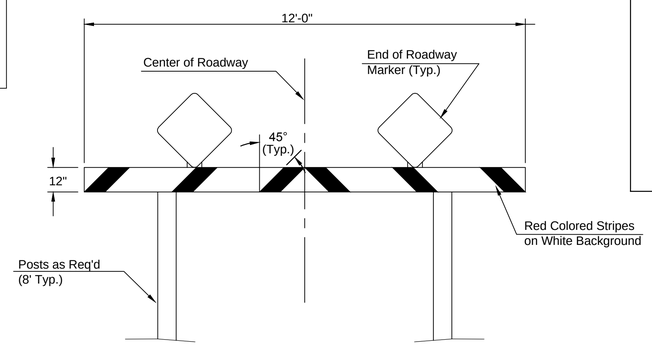

TYPE I BARRICADE DETAIL W/ E.O.R. MARKERS

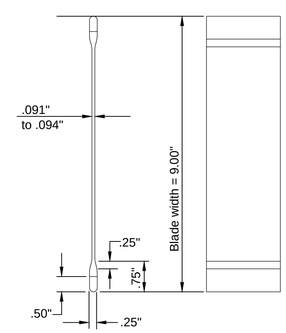

STREET NAME SIGN
BLADE DETAILS

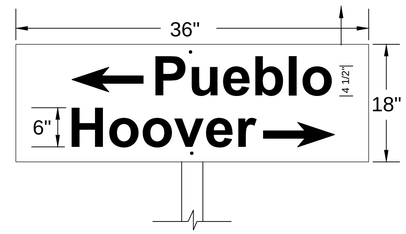

FLAT PLATE STREET NAME SIGN

PERFORATED TUBE SIGN POST INSTALLATION

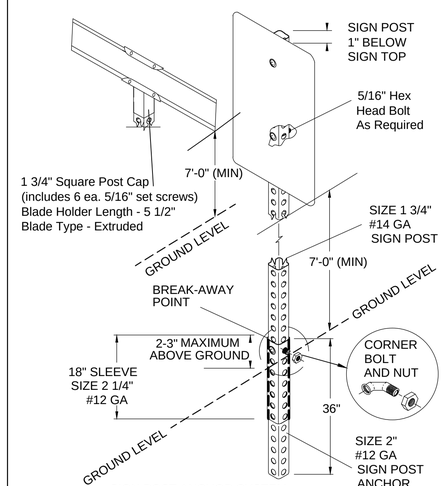

SIGN POST ANCHOR SYSTEM

SIGN ASSEMBLY TABLE

STATION	OFFSET	SIGN	QUANTITY*
1+48	4' Lt & Rt	EOR	2