BICYCLE RACK
Manufacturer: Superior Recreational Products, (866) 305-0978, webcoat.com
Model: BIKELOOPSM
Mounting: Surface mount per mfgr. instructions.
Color: Green

* Or Park & Recreation Department approved equal. *

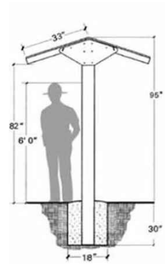

KIOSK WITH SIGN PANEL
Kiosk –
Manufacturer: Rockart Signs & Markers, (480)854-3400, www.rockartsigns.com
Model: 03-562
Shingle color: Green
Mounting: Install in concrete sidewalk (5")(REINFORCED) per mfgr. instructions.

Sign panel –
Size: 36"x48"
Configuration: Single-sided with header, footer, side rails, and polycarbonate cover. Signage/imagery to be provided by Park & Rec. Dep't. Coordinate regarding installation.

* Or Park & Recreation Department approved equal. *

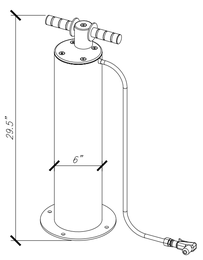

HEAVY DUTY PUBLIC BICYCLE AIR PUMP
Manufacturer: Dero, (888)337-6729, www.dero.com
Model: Air Kit 3
Mounting: Surface mount on concrete pad per mfgr. instructions.
Color: Powdercoat 'Green'

Features:
- Accepts Presta or Shrader valves.
- Includes PSI gauge.
- Magnetic pump head snaps to pump body.

* Or Park & Recreation Department approved equal. *

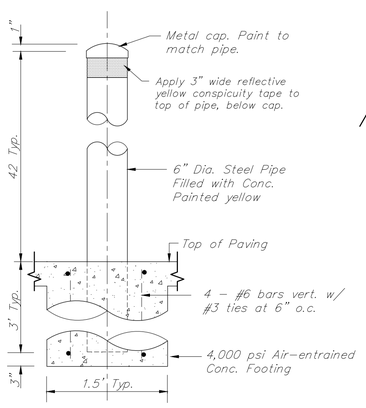

DETAIL SECTION
NTS

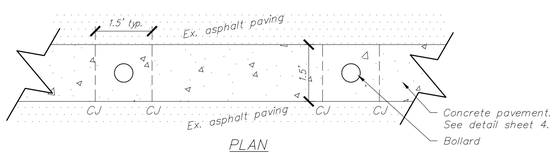

PLAN
NTS

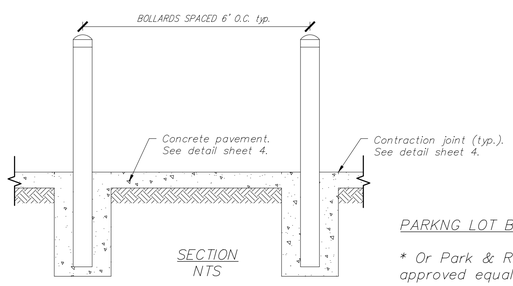

SECTION
NTS

PARKNG LOT BOLLARD

* Or Park & Recreation Department approved equal. *

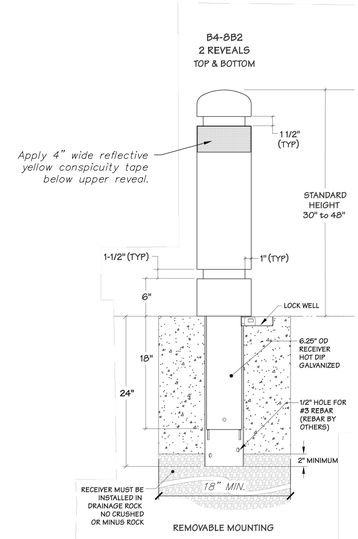

SPECIFICATIONS

MATERIAL
The B4-8" bollards shall be fabricated with 8" (8.625" OD) .188 wall steel pipe. The standard B4 bollard shall have two decorative reveals, one at the top and one at the bottom. The number of reveals and their location can be changed to complement project designs. Top options are flat top, dome top or a sphere. All pipe shall conform to ASTM A53. The in ground receiver, for **removable bollard only** shall be fabricated with 6.25" OD steel sleeve welded to a 3" x 5" lockwell.

PROTECTIVE COATINGS
Powder Coating: Following fabrication bollards shall be cleaned and treated with an iron phosphate process prior to the coating application. The protective coatings shall be either polyester or polyester TGIC powder. Following application the parts shall be baked until properly cured. The coating shall be a minimum of 4 mils thick on all surfaces. **Options for finish:** Corrosion resistant undercoat, strongly recommended
Note: Unless otherwise specified, bollards shall be powder coated a standard FairWeather color.
Hot Dip Galvanizing: Following fabrication, the receivers shall be hot dip galvanized to standard ASTM A123, 3 to 4 mils thick.

Options: Sch 40 or Sch 80 pipe, eye bolts, number of reveals
On removable bollards: receiver cover, lock well cover and padlock
Mounting: Surface, removable or embed

NOTE:
1. Depth and diameter of installation hole may vary with soil conditions. Consult project engineer for correct dimensions.
2. **REMOVABLE BOLLARDS ONLY: Receiver must be installed in drainage rock. No crushed or minus rock** Due to soil conditions the amount of drainage needed could vary from as little as 8 inches to 2 feet or more. **Improper installation will void the warranty**

REMOVABLE/LOCKING BOLLARDS
Manufacturer: Fair Weather Site Furnishings, (800)323-1798, www.fairweathersf.com
Model: Fair Weather B4-8B2
Height: 36"
Mounting: Removable; Locks to be provided by owner.
Color: Mineral Bronze

* Or Park & Recreation Department approved equal. *

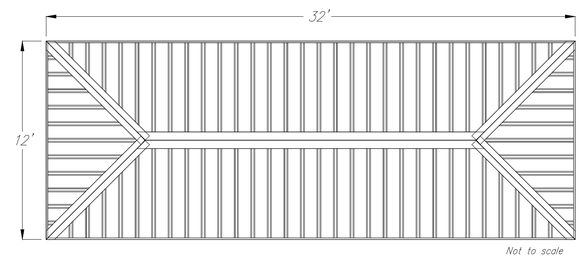

PICNIC SHELTER (BID ALTERNATE)
Manufacturer: Poligon, (800)354-7721, poligon.com
Model: Ramada RAM-12x32
Mounting: Install per mfgr. instructions on concrete pad with footing per structural engineer.

Columns: Plain square
Roof: Multi-rib
* ADDITIONAL BID ALTERNATE: Standing seam roof with 2"x6" tongue & groove deck installed per mfgr. instructions.

Roof color: Evergreen
Structure color: Hunter green

* Or Park & Recreation Department approved equal. *

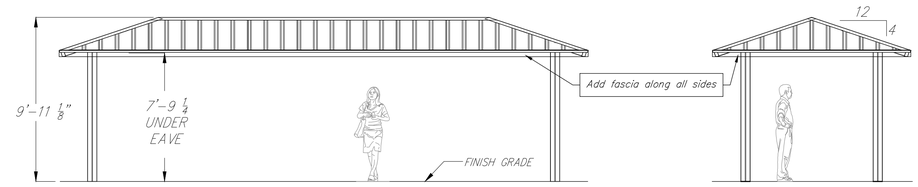

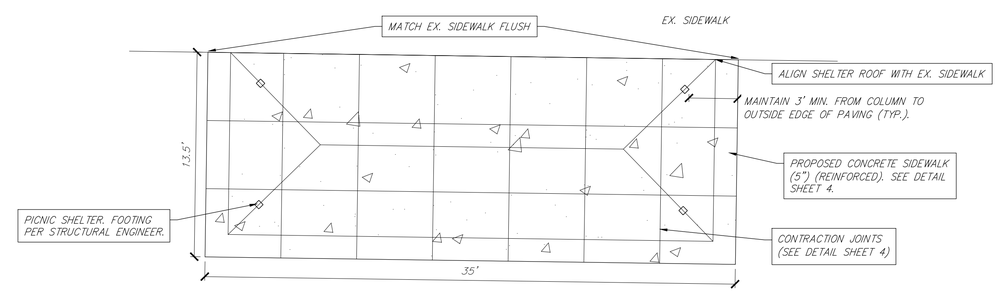

PICNIC SHELTER SITE PLAN

5 0 5
SCALE: 1" = 5'

BAUGHMAN COMPANY
315 Ellis St. Wichita, KS 67211 316-262-7271
BaughmanCo.com

CAPITAL IMPROVEMENT PROJECT
BIKE PATH DETAILS
PAWNEE PRAIRIE PARK IMPROVEMENTS

PROJECT NUMBER: 436632
INTERNAL NUMBER: 17-11-E865
DESIGN: AH
DRAWN: AH
DATE: Jul, 2018
SHEET 20 OF 23

File: E:\PROJECTS\PAWNEE PRAIRIE PARK 17-11-E865\ENGINEERING\PP BASE.DWG