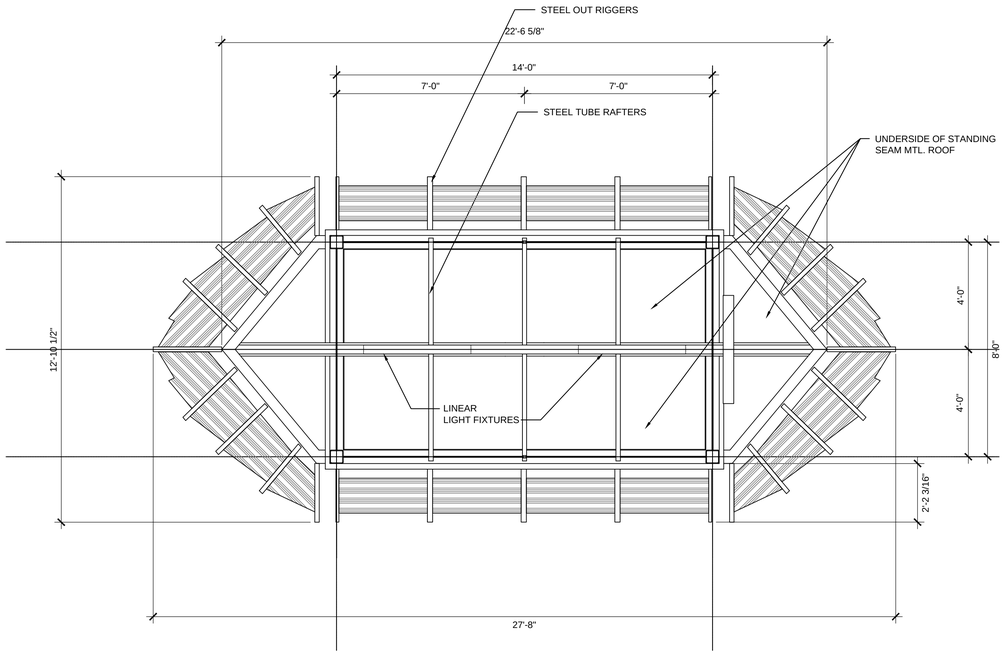

1 REFLECTED CEILING PLAN

3/8"=1'-0"

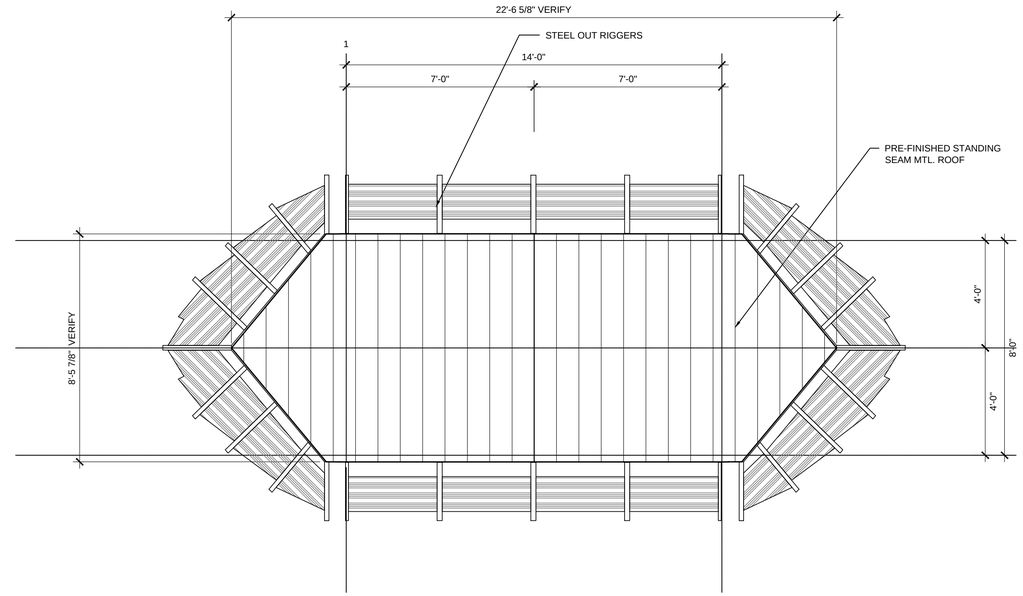

2 ROOF PLAN

3/8"=1'-0"

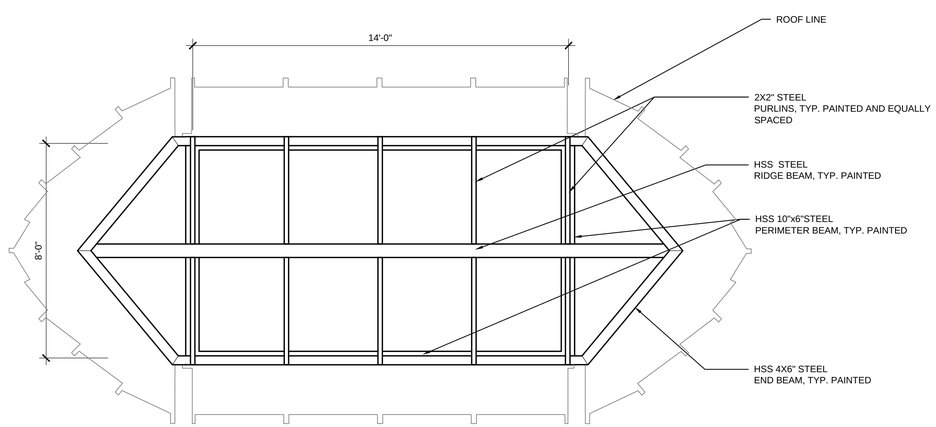

3 ROOF FRAMING PLAN

3/8"=1'-0"

SHELTER DRAWINGS ARE FOR REFERENCE ONLY

PRINTS ISSUED

DATE	PURPOSE	NO.
10.12.18	FOR BID	

DOUGLAS AVE. TRANSIT
SHELTER RELOCATION
WICHITA, KS

LK Architecture

Architecture • Engineering • Planning • Interior Design • Landscape Architecture

LK Architecture Inc. ©
345 RIVERVIEW,WICHITA,KS 67203
Phone (316) 268-0230 Fax: (316) 268-0205

CONTACT: Jeffery A. Best, ASLA

PROJECT NUMBER:
18484

SHEET TITLE:
ROOF PLAN AND DETAILS

SHEET NUMBER:
A3