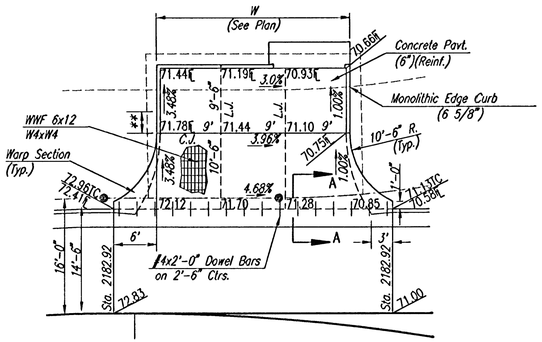

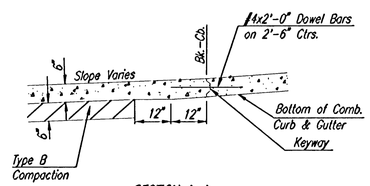

SECTION A-A

PARKING BAY DETAILS

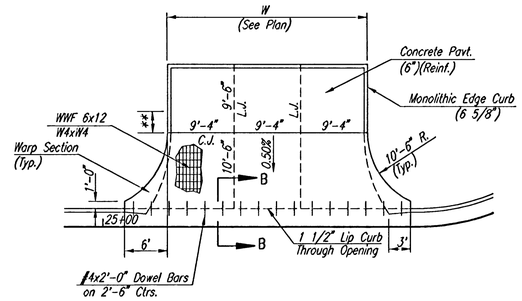

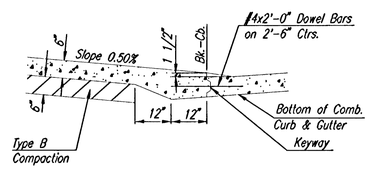

SECTION B-B

PARKING BAY DETAILS

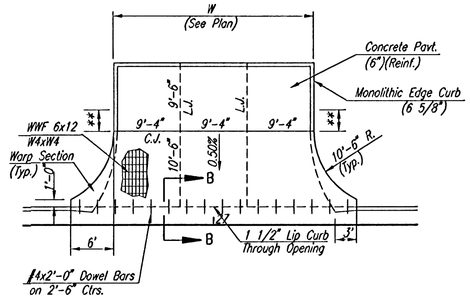

** Taper Curb Height to 0"
in 3 ft. (Typ. Both Side)

6"x12" W4xW4 WIRE FABRIC REINFORCING SHALL BE PLACED SUCH THAT THE WIRES WITH THE 6" SPACING WILL RUN PARALLEL WITH THE LONGITUDINAL JOINT.

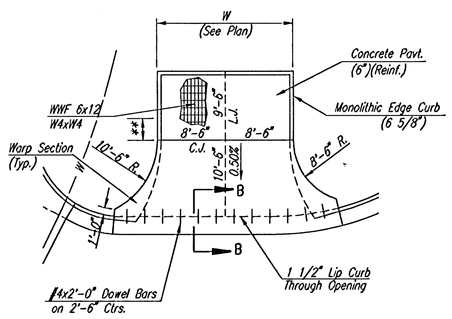

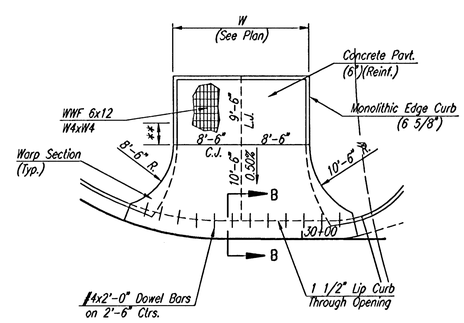

No.	Revision	By	Date

OAK CREEK 3RD

PARKING BAY DETAILS

Professional Engineering Consultants, P.A.
303 S. TOPEKA • WICHITA, KANSAS 67202
316-262-2691 • FAX 316-262-3003

Designed by	BDB, BMM	Job No.	35-06572-000
Drawn by	BJS, TAT	Date	February 2006

Sheet 14 of 45

Saved 10-24-2006 7:26:56 AM by BJS
Plot Scale 1:10 10-31-2006 12:25:23 PM by BJS
C:\2006\06572\000\06572-000-C-PARKING BAY DTL