GENERAL NOTES

1. DESIGN & CONSTRUCTION SHALL CONFORM TO THE "INTERNATIONAL BUILDING CODE", 2012 EDITION, AS AMENDED AND ADOPTED BY THE WICHITA–SEDGWICK COUNTY, KS METROPOLITAN AREA BUILDING AND CONSTRUCTION DEPARTMENT.
2. DESIGN CRITERIA AND LOADS: ULTIMATE WIND SPEED–115 MPH (3 SEC. GUST), EXPOSURE C, WIND/SEISMIC RISK CATEGORY II, SEISMIC DESIGN CATEGORY B, SEISMIC SITE CLASS D.
3. THE SOIL BEARING PRESSURE IS NOT MORE THAN 1500 PSF FOR PIER FOOTINGS. PIERS SHALL BEAR INTO UNDISTURBED NON–ORGANIC SOILS OR AN ENGINEERED CONTROLLED FILL.
4. ALL STRUCTURAL REGULAR WEIGHT CONCRETE SHALL HAVE A MINIMUM COMPRESSIVE STRENGTH OF 3000 PSI AT 28 DAYS (TYP. UNLESS NOTED). ALL CONCRETE SHALL BE IN CONFORMANCE WITH THE LATEST A.C.I. 301 STANDARDS PUBLICATION.
5. ALL REINFORCING BARS SIZE #4 AND LARGER SHALL MEET ASTM A615 GRADE 60.
6. REINFORCEMENT SHALL BE CONTINUOUS AND LAPPED 30 BAR DIAMETERS (2'–0" MIN.) EXCEPT AS NOTED, PROVIDE CORNER BARS OF SAME SIZE AND SPACING.
7. PROVIDE DRAINAGE BLOCK OUT @ 25'–0" O.C.
8. CONTACT ENGINEER IF CONDITIONS VARY.

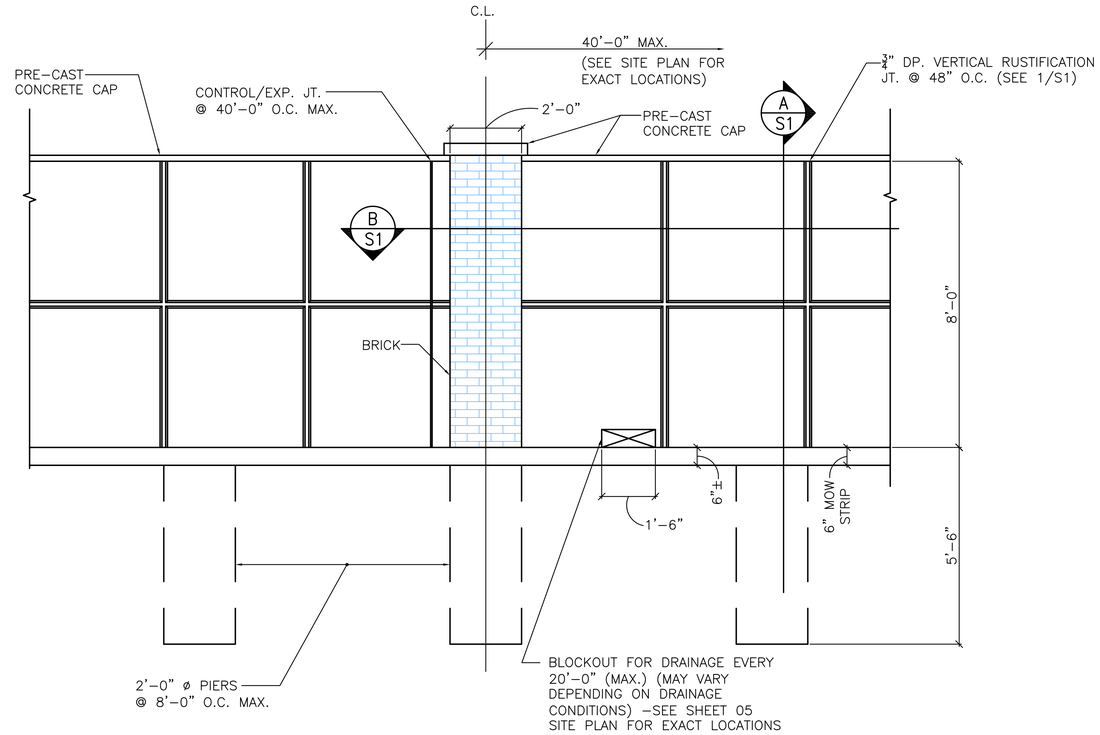

8' WALL ELEVATION

SCALE: 1/2"=1'-0"

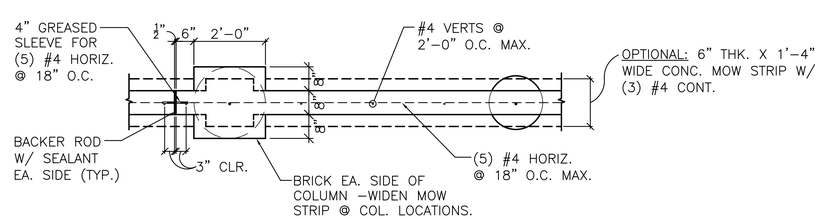

B/S1 SECTION @ WALL

SCALE: 1/2"=1'-0"

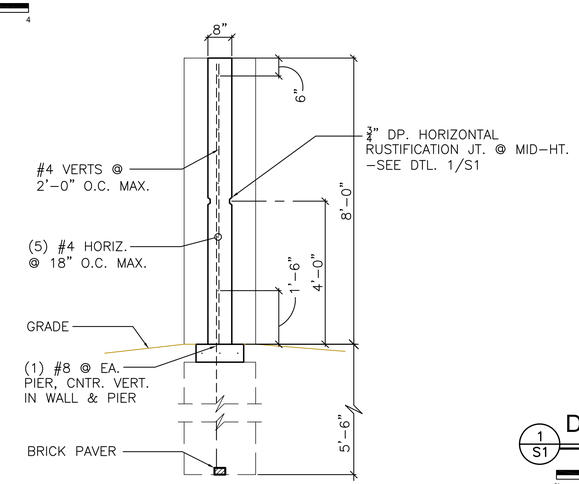

A/S1 SECTION @ WALL

SCALE: 1/2"=1'-0"

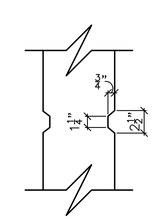

1/S1 DETAIL @ WALL

SCALE: 1 1/2"=1'-0"

MKEC
Wichita, KS • 316.684.9600

LIFT STATION & FORCE MAIN FOR
VERANDA ADDITION
WICHITA, KANSAS

RUSSELL REDFORD LICENSED 16793 KANSAS PROFESSIONAL ENGINEER
14/JAN/19

©2019
MKEC Engineering
All Rights Reserved
www.mkec.com
These drawings and their contents, including, but not limited to, all concepts, designs, & ideas are the exclusive property of MKEC Engineering (MKEC), and may not be used or reproduced in any way without the express consent of MKEC.

WALL & SECTIONS

PROJECT NO.	1801010816
DATE	1/15/2019
SCALE	AS NOTED

DESIGNED	DRAWN	CHECKED
RR	CS	RR

NO.	REVISION	DATE
0	ISSUED FOR BID	1-15-19

SHEET NO.
25 OF 25

PLOTTED: Wednesday, January 16, 2019 @ 01:05PM

J:\PROJECTS\2018\1801010816_COW_SS_MAIN\31_VERANDAADD_18816 CAD\SHTS\06 STRUC\DWGS\S1.DWG