FHWA REG NO.	STATE	PROJECT NO.	YEAR	SHEET NO.	SHEETS
7	KANSAS	472-83668	2002	4	31

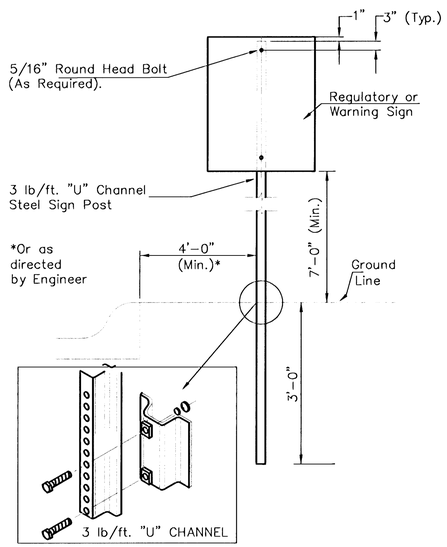

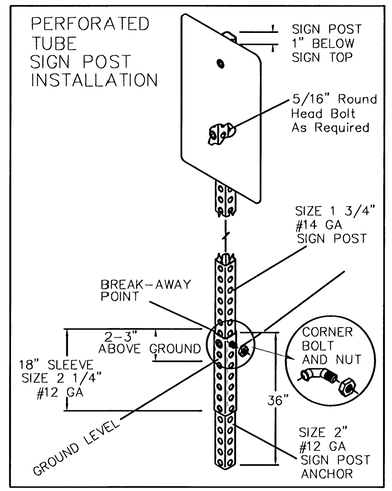

TYPICAL TRAFFIC CONTROL SIGN MOUNTING INSTALLATION

CURB AND GUTTER SECTION

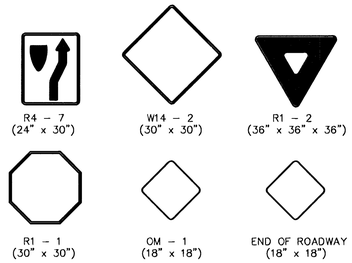

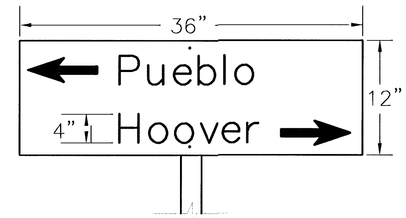

FLAT PLATE STREET NAME SIGN

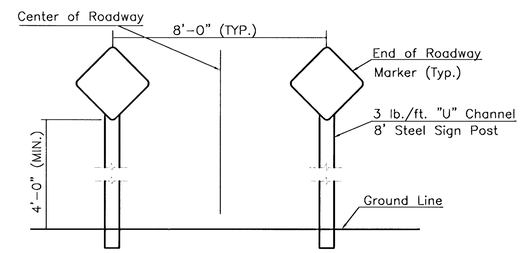

TYPICAL END OF ROADWAY SIGN MOUNTING INSTALLATION

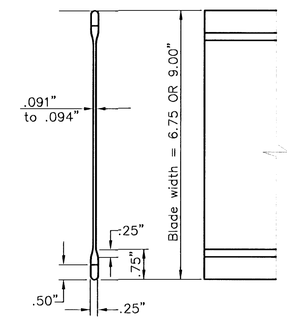

STREET NAME SIGN

BLADE DETAILS

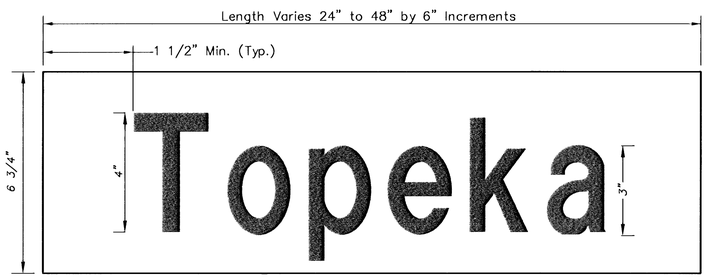

DETAIL A
6 3/4" STANDARD

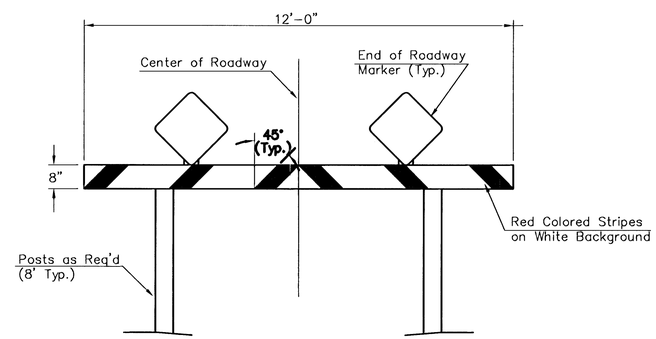

TYPE I BARRICADE DETAIL W/ E.O.R. MARKERS

SIGN ASSEMBLY TABLE

STATION	OFFSET	SIGN	QUANTITY*
18+56 Rosewood	7.5' Rt and Lt	EOR	2
29+50 Rosewood	20.5' Rt	R1-1	1
29+52 Rosewood	30' Lt	SNS	1
24+64 Rosewood	30' Lt	SNS	1
27+68 Rosewood	30' Lt	SNS	1
0+32 Woodcreek	7.5' Rt and Lt	EOR	2