FHWA REG NO.	STATE	PROJECT NO.	YEAR	SHEET NO.	SHEETS
7	KANSAS	472-83784	03	3	15

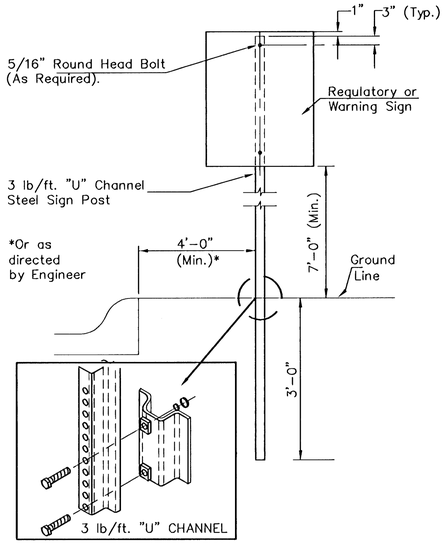

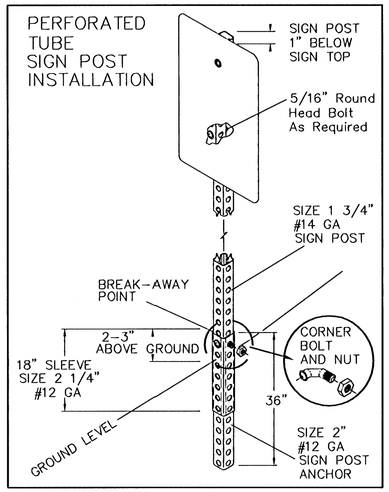

TYPICAL TRAFFIC CONTROL SIGN MOUNTING INSTALLATION

CURB AND GUTTER SECTION

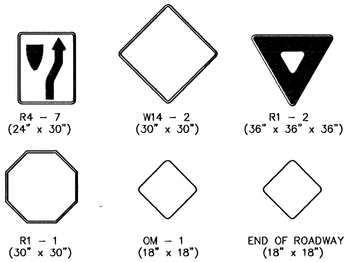

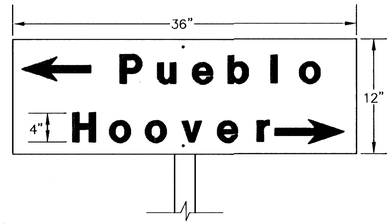

FLAT PLATE STREET NAME SIGN

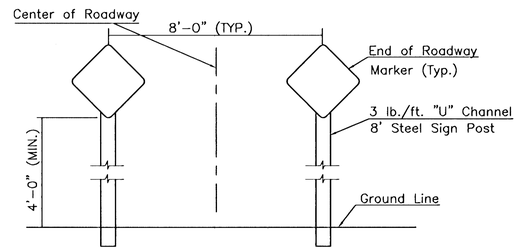

TYPICAL END OF ROADWAY SIGN MOUNTING INSTALLATION

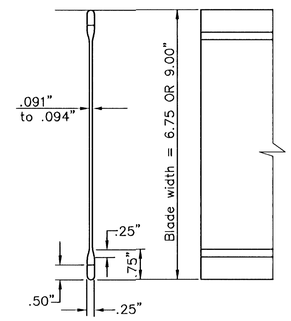

STREET NAME SIGN

BLADE DETAILS

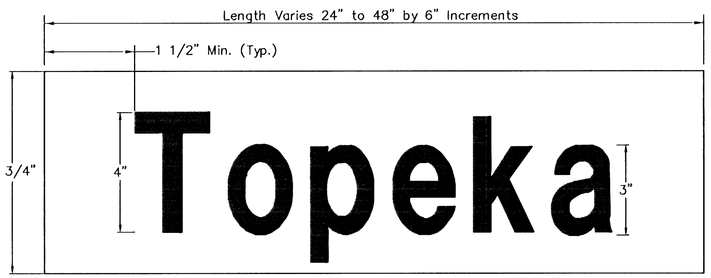

DETAIL A

6 3/4" STANDARD

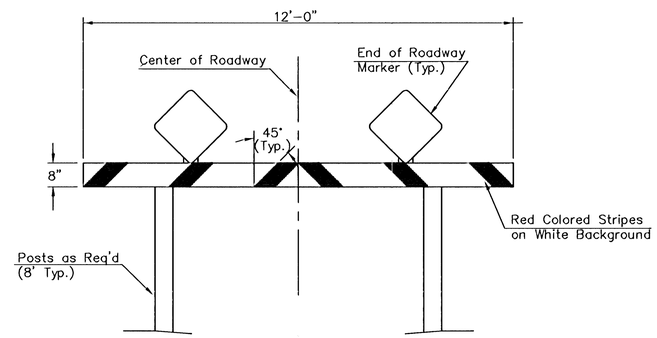

TYPE I BARRICADE DETAIL W/ E.O.R. MARKERS

SIGN ASSEMBLY TABLE

STATION	OFFSET	SIGN	QUANTITY*
61+01.12	95.77' RT.	R1-1	1
61+31.05	30.00' RT.	R4-7/OM-1	1
59+06.04	8.69' RT.	R4-7/OM-1	1
56+70.98	27.48' LT.	SNS	1
61+06.67	28.39' LT.	SNS	1